Madison Metropolitan Sewerage District

Heat and Power Improvements Facilities Plan

Facilities Plan

December 2025 / FINAL

Madison Metropolitan Sewerage District

Heat and Power Improvements Facilities Plan

Facilities Plan

December 2025 / FINAL

Digitally signed by Lindsey I. Busch
Date: 2026.01.08 15:43:13-06'00'

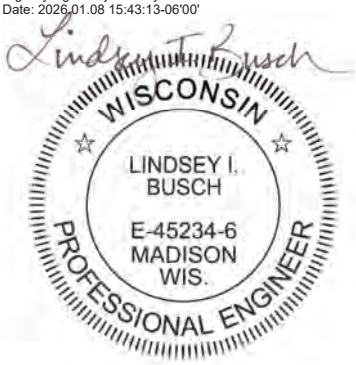

Contents

EXECUTIVE SUMMARY 1

ES.1 Background and Planning 1
ES.2 Biogas Evaluation 2
ES.3 Plant Wide Heating System Evaluation 2
ES.4 Recommendations and Next Steps 3

SECTION 1 PLANNING CRITERIA 5

1.1 Project Background and Scope 5
1.2 Planning Criteria 6
1.2.1 Capital and Life Cycle Cost Assumptions 7
1.3 Permitting Requirements 8
1.3.1 Existing Air Emissions Equipment and Limitations 8
1.3.2 Air Emissions Regulatory Considerations 10

SECTION 2 BIOGAS DEMAND AND THERMAL PROJECTIONS 10

2.1 Biogas System Overview 10
2.1.1 Biogas Conditioning and End Uses 10
2.1.2 Historical Biogas Production and Quality 11
2.1.3 Biogas Production Projections 12
2.2 Thermal Heating System Overview 13
2.2.1 Existing Thermal Heating System 13
2.2.2 Building Thermal Demands 14
2.2.3 Process Thermal Demands 15

SECTION 3 EXISTING INFRASTRUCTURE EVALUATION 18

3.1 Biogas System Evaluation Results 18
3.1.1 Operational Issues 19
3.2 Thermal Heat System Evaluation Results 19
3.2.1 Operational Issues 20
3.3 Summary of Existing Infrastructure Evaluation 21

SECTION 4 BIOGAS EVALUATION 21

4.1 Financial Market Considerations 21
4.1.1 Pathway 1 - Cogeneration 21
4.1.2 Pathway 2 - RNG 22
4.2 Null Pathway 23
4.3 Pathway 1 - Cogeneration Evaluation 25
4.3.1 Basis of Design 25
4.3.2 Capital and Life Cycle Costs 31

4.4 Pathway 2 - RNG Evaluation 33
4.4.1 Renewable Natural Gas Interconnect 33
4.4.2 Basis of Design 34
4.4.3 Capital and Life Cycle Costs 38
4.5 Biogas Evaluation Summary 40

SECTION 5 PLANT WIDE HEATING SYSTEM EVALUATION 42

5.1 Existing Hot Water Heating System 42
5.1.1 Existing Hot Water Generation 44
5.1.2 Existing Hot Water Demands 44
5.1.3 Summary of Deficiencies 45
5.2 Null Pathway 45
5.2.1 Summary of Hot Water Heating System 45
5.2.2 Summary of Infrastructure Modifications 47
5.3 Pathway 1 - Cogeneration Evaluation 47
5.3.1 Pathway 1 Cogeneration with Centralized Heating System Alternative 48
5.3.2 Pathway 1 Cogeneration with Decentralized Heating System Alternative 59
5.4 Pathway 2 - RNG Evaluation 67
5.4.1 Pathway 2 RNG Centralized Heating Alternative 67
5.4.2 Pathway 2 RNG Decentralized Heating Alternative 71
5.5 Heating System Evaluation Summary 75

SECTION 6 RECOMMENDATIONS AND NEXT STEPS 78

6.1 Biogas and Thermal Pathway Recommendations 78
6.2 Updated Envision™ Pre-Assessment 83
6.3 Greenhouse Gas Emissions 83
6.3.1 Scope 2 83
6.3.2 Scope 1 and Overall Emissions 84
6.4 Permitting 85
6.5 Project Delivery Evaluation 85
6.5.1 Design-Bid-Build with Early Equipment Procurement 85
6.5.2 Design-Build 85
6.5.3 Third-Party Financed Design-Build 86
6.6 Project Schedule 86
6.7 Next Steps 86

SECTION 7 COST EFFECTIVENESS AND FISCAL IMPACT COST ANALYSIS 87

7.1 Parallel Cost Ratio 87
7.2 Fiscal and User Charge Impacts 87
7.3 Environmental Impacts 88
7.3.1 Pathway 1 (Cogeneration) 88
7.3.2 Pathway 2 (RNG) 89

Appendices

APPENDIX A TECHNICAL MEMORANDUM 1 - DECISION-MAKING CRITERIA, ENVISIONTM ROADMAP, GREENHOUSE GAS AND ENERGY BASELINE

APPENDIX B TECHNICAL MEMORANDUM 2 - BIOGAS PRODUCTION AND THERMAL DEMAND PROJECTIONS

APPENDIX C TECHNICAL MEMORANDUM 3 - EXISTING INFRASTRUCTURE EVALUATION

APPENDIX D TECHNICAL MEMORANDUM 4 - BIOGAS EVALUATION

APPENDIX E TECHNICAL MEMORANDUM 5 - PLANT-WIDE HEATING SYSTEM EVALUATION

APPENDIX F TECHNICAL MEMORANDUM 6 - ENVISIONTM PRE-ASSESSMENT

APPENDIX G BUSINESS CASE EVALUATION

Tables

Table 1	Combined Estimated Project Capital Cost	4
Table 2	Combined Estimated Payback	4
Table 3	Decision-Making Criteria	6
Table 4	Construction Allowances, Contingencies, and Assumptions	7
Table 5	Unit Cost Assumptions	8
Table 6	NSWTP Air Emissions Equipment	9
Table 7	Average NSWTP Air Emissions from 2015 through 2019	9
Table 8	NSWTP Historical Biogas Quality Summary	12
Table 9	Comparison of Biogas Production Projections for Baseline and Alternative Future Conditions	13
Table 10	Current and Future Building Related Total Annual Thermal Demands	14
Table 11	Future Projected Annual Thermal Demands of New Buildings	15
Table 12	Current and Future Thermal Demands for Current Operation, Conversion to Thermophilic Digestion and Implementing Biosolids Drying	17
Table 13	Null Pathway Net Present Value	24
Table 14	Biogas Quality Requirements for Reciprocating Engines	26
Table 15	Pathway 1 (Cogen) Design Criteria	28
Table 16	Pathway 1 (Cogen) Estimated Project Cost	31
Table 17	Pathway 1 (Cogen) Net Present Value	32
Table 18	Pathway 1 (Cogen) Sensitivity Analyses	32
Table 19	Pathway 2 (RNG) Design Criteria	36
Table 20	Pathway 2 (RNG) Estimated Project Cost	38
Table 21	Pathway 2 (RNG) Net Present Value	39
Table 22	Pathway 2 (RNG) Sensitivity Analysis	40
Table 23	Review of Pathways 1 (Cogen) and 2 (RNG) Based on Decision Criteria	41
Table 24	Existing Hot Water Generation Design Output Capacities	44
Table 25	Estimated Cu rrent Peak Heat Demand by Building	44
Table 26	Estimated Future Peak Heat Demand by Hot Water Loop - Null Pathway	46
Table 27	Null Pathway Net Present Value	47

Table 28 Estimated Future Peak Heat Demand - Pathway 1 (Cogen) Centralized Heating Alternative 50
Table 29 Estimated Future Hot Water Generation Output Capacity Pathway 1 (Cogen) Centralized Heating Alternative 50
Table 30 Pathway 1 (Cogen) Centralized Heating Alternative Building Modification Summary 52
Table 31 Design Alternatives Emissions and Energy Use Comparison Table for Pathway 1 Centralized 57
Table 32 Pathway 1 Centralized GHG Emissions 57
Table 33 Pathway 1 (Cogen) Centralized Heating Alternative Project Cost 58
Table 34 Pathway 1 (Cogen) Centralized Heating Alternative Net Present Value 58
Table 35 Estimated Future Peak Heat Demand - Pathway 1 (Cogen) Decentralized Heating Alternative 60
Table 36 Estimated Future Hot Water Generation Output Capacity Pathway 1 (Cogen) Decentralized Heating Alternative 60
Table 37 Pathway 1 (Cogen) Decentralized Heating Alternative Building Modification Summary 61
Table 38 Design Alternatives Emissions and Energy Use Comparison Table for Pathway 1 Decentralized 65
Table 39 Pathway 1 Decentralized GHG Emissions 66
Table 40 Pathway 1 (Cogen) Decentralized Heating Alternative Project Cost 66
Table 41 Pathway 1 (Cogen) Decentralized Heating Alternative Net Present Value 67
Table 42 Estimated Future Peak Heat Demand - Pathway 2 (RNG) Centralized Heating Alternative 68
Table 43 Estimated Future Hot Water Generation Output Capacity Pathway 2 (RNG) Centralized Heating Alternative 68
Table 44 Design Alternatives Emissions and Energy Use Comparison Table for Pathway 2 Centralized 70
Table 45 Pathway 2 Centralized GHG Emissions 70
Table 46 Pathway 2 (RNG) Centralized Heating Alterative Project Cost 71
Table 47 Pathway 2 (RNG) Centralized Heating Alternative Net Present Value 71
Table 48 Estimated Future Peak Heat Demand - Pathway 2 (RNG) Decentralized Heating Alternative 72
Table 49 Estimated Future Hot Water Generation Output Capacity Pathway 2 (RNG) Decentralized Alternative 72
Table 50 Design Alternatives Emissions and Energy Use Comparison Table for Pathway 2 Decentralized 73
Table 51 Pathway 2 Decentralized GHG Emissions 74
Table 52 Pathway 2 Decentralized Heating Alternative Project Cost 74
Table 53 Pathway 2 Decentralized Heating Alternative Estimated Net Present Value 75
Table 54 Summary of Estimated Project Cost Comparison for Heating System Modifications 75
Table 55 Summary of Estimated Net Present Value Comparison for Heating System Modifications 76
Table 56 Review of Pathways 1 (Cogen) and 2 (RNG) Based on Decision Criteria 77

Table 57 Combined Estimated Project Capital Cost for All Alternatives 79
Table 58 Combined Estimated Payback for All Alternatives 79
Table 59 Combined Quantitative Scoring of Decision Criteria 80
Table 60 Estimated Project Capital Cost for Recommended Pathway 2 (RNG) Decentralized Alternative 81
Table 61 Design Alternatives Emissions and Energy Use Comparison Table for Pathway 2 - Decentralized 83
Table 62 Pathway 2 - Decentralized GHG Emissions and Offsets Compared to the Baseline 84
Table 63 Annual MMSD-only Charges With and Without Project Costs 88

Figures

Figure 1 NSWTP Historical Daily Biogas Production (2020 to 2024) 11
Figure 2 NSWTP Biogas Production Projections through 2050 12
Figure 3 Existing NSWTP Hot Water Heat Loop Schematic 16
Figure 4 Consolidated Condition Scores for all Biogas Assets by Building 18
Figure 5 Consolidated Condition Scores for all Thermal Assets by Building 20
Figure 6 Null Pathway Process Flow Diagram 23
Figure 7 Pathway 1 (Cogen) Process Flow Diagram 25
Figure 8 Pathway 1 (Cogen) Proposed Site Layout 29
Figure 9 Pathway 2 (RNG) Process Flow Diagram 33
Figure 10 Pathway 2 (RNG) Proposed Site Layout and RNG Piping to Injection Point 37
Figure 11 Comparison of Net Present Values 40
Figure 12 Existing Site Heating Hot Water Piping Map 43
Figure 13 Current Hot Water Schematic - Null Pathway 46
Figure 14 Pathway 1 Centralized Alternative Building Heat Source Map 49
Figure 15 Graph of Hot Water System at Different Outside Air Temperatures Indicating Heating Demands Compared to Cogeneration Engine Output Pathway 1 (Cogen) Centralized Heating Alternative 51
Figure 16 Pathway 1 (Cogen) Centralized Heating Alternative Proposed Site Piping Modifications 55
Figure 17 Proposed Cogeneration/Boiler Building Future Hot Water Schematic - Pathway 1 (Cogen) Centralized Heating Alternative 56
Figure 18 Pathway 1 (Cogen) Decentralized Heating Alternative Building Heat Source Map 59
Figure 19 Pathway 1 (Cogen) Decentralized Heating Alternative Proposed Site Piping Modifications 64
Figure 20 Proposed Future Hot Water Schematic - Pathway 1 (Cogen) Decentralized Heating Alternative 65
Figure 21 Proposed Future Hot Water Schematic - Pathway 2 Centralized Heating Alternative 69
Figure 22 Proposed Future Hot Water Schematic - Pathway 2 (RNG) Decentralized Heating Alternative 73
Figure 23 Pathway 2 (RNG) Decentralized Alternative Combined Site Layout 82

Abbreviations

ºF	degrees Fahrenheit
$	dollars
$/yr	cost per year
%	percent
AACE	Association for the Advancement of Cost Engineering International
AHU	air handling unit
ANR	ANR Pipeline Company
BABA	Build America, Buy America
bhp	boiler horsepower
BOD	biochemical oxygen demand
Btu	British thermal unit
Carollo	Carollo Engineers
CBOD	carbonaceous biochemical oxygen demand
cfd	cubic feet per day
CH_4	methane
CHP	combined heat and power
CNG	compressed natural gas
CO	carbon monoxide
CO_2	carbon dioxide
CO_2e	carbon dioxide equivalents
CWSRF	Clean Water State Revolving Fund
D3	cellulosic biofuel
D5	advanced biofuel
DB	design-build
DBB	design-bid-build
Dth	dekatherm
EMMP	Energy Management Master Plan
EPA	United States Environmental Protection Agency
eRIN	electric renewable identification number
ft^2	square feet
FOG	fats, oils, and grease
GAC	granular activated carbon
GHG	greenhouse gas
gpd	gallons per day
H_2S	hydrogen sulfide
hp	horsepower
hr	hour(s)

HSW	high-strength waste
HVAC	heating, ventilation, and air conditioning
I&C	instrumentation and controls
IRA	Inflation Reduction Act
kW	kilowatt
kWh	kilowatt-hour
lb/year	pounds per year
MAOP	maximum allowable operating pressure
MAU	make-up air unit
MBH	thousand British thermal units per hour
MG	million gallons
MG&E	Madison Gas and Electric
mgd	million gallons per day
MMBtu	million British thermal units
MMBtuh	metric million British thermal units per hour
MMBH	million British thermal units per hour
MMSD	Madison Metropolitan Sewerage District
MT	metric ton(s)
MW	megawatt
MWh	megawatt-hour
NFPA	National Fire Protection Association
NO_X	nitrogen oxide
NPV	net present value
NSPS	New Source Performance Standards
NSWTP	Nine Springs Wastewater Treatment Plant
O&M	operations and maintenance
ppbv	parts per billion by volume
ppm	parts per million
ppmv	parts per million by volume
PS	primary sludge
psi	pounds per square inch
psig	pounds per square inch gauge
PTC	production tax credit
REC	renewable energy certificate
RFS	renewable fuel standard
RIN	renewable identification number
RNG	renewable natural gas
SCB2	Sludge Control Building No. 2
scfd	standard cubic feet per day

scfm	standard cubic feet per minute
TM	technical memorandum
VAV	variable air volume
VFD	variable frequency drive
VOC	volatile organic compound
WAS	waste activated sludge
WDNR	Wisconsin Department of Natural Resources
WRRF	water resource recovery facility
WS	Visioning Workshop
yr	year(s)

EXECUTIVE SUMMARY

The Heat and Power Improvements Facilities Plan was developed to provide the Madison Metropolitan Sewerage District (MMSD) with a comprehensive roadmap to evaluate and address aging heat and power infrastructure at the Nine Springs Wastewater Treatment Plant (NSWTP). The plan was built on the 2020 Energy Management Master Plan (EMMP) which identified two key alternatives: Enhanced Baseline Alternative which upgraded the existing system with higher efficiency cogeneration engines and, Reduced Infrastructure Complexity Alternative, which converted the infrastructure to a biogas upgrading system to simplify operations. This project further evaluated these two biogas utilization options and provided recommendations to enhance thermal system operations at MMSD.

ES.1 Background and Planning

To aid MMSD's decision-making process, decision-making criteria were established to use in business case evaluations, and a summary of the chosen criteria and weighting is provided in this plan. Life cycle costs received the highest priority by MMSD staff, followed by capital costs and operational complexity/difficulty, whereas energy recovery, and finally market risk and outside dependence received the relatively lowest ranking.

Energy baselining was an important step in the 2020 EMMP and since its completion energy use at NSWTP has not been impacted much. Annual energy use by treatment area was summarized for the year 2020 and the total electrical use was found to be 113,100 kilowatt-hours per day (kWh/day) and it was noted that the NSWTP uses less energy than an average facility for secondary treatment and dewatering, but more for solids handling and pumping. It also recovers more electricity from biogas than typical facilities. A greenhouse gas (GHG) inventory was created using United States Environmental Protection Agency (EPA) guidance to establish a baseline and net emissions were updated to 1,340 metric tons carbon dioxide equivalents per year (CO_2e/yr) after accounting for biogas combustion, natural gas use, efficiency upgrades, and offsets from on-site generation.

Biogas production and thermal demand projections were also developed for the NSWTP using available data. Currently, 900,000 cubic fee per day (cfd) of biogas is generated and is projected to grow 0.9% annually, reaching over 1.1 million cubic feet/day by 2050. To account for potential changes in future biogas production, projections were developed for two alternative scenarios: adding hauled fats, oils, and grease (FOG) waste directly to the digesters (+144,000 cfd) and converting all digesters to thermophilic operation. For full thermophilic digestion, the thermal demand is anticipated to increase 19% by 2050 and would add 21% more biogas above baseline. Biosolids drying was also considered, which could more than double thermal demand, requiring significant natural gas input.

An existing infrastructure evaluation of the biogas and thermal system was performed to determine the status and operational challenges of the existing infrastructure. The biogas system was found to have several age-related and performance issues. The engines and engine blower are well past their expected service life, which significantly limits their performance. Radiators and silencers were in poor to very poor condition, showing signs of corrosion and requiring replacement. The gas conditioning skid is in fair condition but has ongoing maintenance challenges. Problems have been noted with gas storage capacity when both floating covers are in service. The thermal system was also found to be experiencing major

challenges. The boilers have exceeded their typical service life, and due to low gas pressure during winter, their capacity is further limited. Failures had been observed in underground piping, particularly in the north loop. The pumps and heat exchangers were functional but may have surpassed their original design life. Additionally, the lack of an integrated control system meant operators must rely heavily on manual expertise to manage system operations effectively. All of these deficiencies and operational issues were taken into consideration in the evaluations.

ES.2 Biogas Evaluation

Keeping with the 2020 EMMP recommendations, the following pathways were evaluated to beneficially use biogas at NSWTP:

Null Pathway: This approach involves maintaining the existing engines, engine blower, and boilers primarily through rebuilds, with capital investments limited to in-kind replacements such as the blower, chiller, and controls. However, the system remains inefficient, highly maintenance-intensive, and limited by a gas conditioning capacity of approximately 630 standard cubic feet per minute (scfm). As the equipment continues to age, operational risks increase, making this pathway unsuitable for long-term planning.

Pathway 1 - Cogeneration: This option proposed replacing the current engines with two new 1.5 megawatts (MW) reciprocating cogeneration engines housed in a new building. A modern gas conditioning system would be installed to remove hydrogen sulfide, siloxanes, and moisture, while the existing engine blower would be decommissioned to simplify biogas routing. This pathway would generate approximately 60% of the facility's electrical demand—double the current output—and provide 6.8 to 7.3 million British thermal units per hour (MMBH) of average recoverable heat, significantly reducing natural gas consumption during winter. The estimated capital cost was around $27 million, with a 20-year net present value (NPV) of approximately $14 million and a payback period of about 13 years. GHG emissions would see a net reduction due to improved system efficiency, despite a rise in Scope 2 emissions from electricity use. This pathway would require a new air permit, though emissions performance would be improved with the use of modern engines.

Pathway 2 - Renewable Natural Gas (RNG): This strategy involves replacing the engines with a biogas upgrading membrane system and connecting to a local natural gas pipeline. All biogas would be upgraded to RNG and sold for use as vehicle fuel, taking advantage of D3 Renewable Identification Numbers (RINs) and voluntary market credits. On-site energy generation would be eliminated, and the facility would rely entirely on purchased electricity and primarily on natural gas for heating. The estimated capital cost is around $26 million, with a 20-year NPV of approximately $59.5 million and a payback period of about 6 years. Air permit modifications and potentially tail gas treatment would be required.

ES.3 Plant Wide Heating System Evaluation

The following pathways were evaluated for the plant wide heating system at NSWTP:

Null Pathway - The Null Pathway anticipates no major changes to the existing hot water infrastructure other than the replacement of major thermal equipment that is at the end of its useful life (West Boilers).

Pathway 1 - Cogeneration: Pathway 1 focuses on replacing existing engine generators with new high-efficiency cogeneration units that utilize all digester gas for both electricity generation and heat recovery. Two heating alternatives were assessed:

1. **Centralized Heating Alternative**: Hot water would supply all process and heating, ventilation, and air conditioning (HVAC) heating needs across the plant. This option consolidates heat supply into a common loop, eliminating the separate east and west/central loops. Supplemental boilers would provide reliability when cogeneration is offline. The estimated capital cost is around $20 million, with a 20-year NPV of approximately $32 million.
2. **Decentralized Heating Alternative**: Hot water distribution is limited to central buildings and digestion facilities, while other buildings are heated with natural gas equipment. This reduces infrastructure needs but increases purchased fuel demand. The estimated capital cost is around $15 million, with a 20-year NPV of approximately $27 million.

Both alternatives require a new Cogeneration/Boiler Building, upgraded piping, new boilers and pumps, and modifications to ventilation systems.

Pathway 2 - RNG: Pathway 2 replaces existing cogeneration engines with a biogas upgrading system to produce RNG for pipeline injections. All digester gas is conditioned, compressed, and injected into the natural gas utility grid. This results in higher dependence on purchased electricity and natural gas but generates new revenue streams from RNG sales and environmental credits. Two heating alternatives were considered:

1. **Centralized Heating Alternative**: All heating needs are served by new boilers in a new Boiler Building. The estimated capital cost is around $20 million, with a 20-year NPV of approximately $40 million.
2. **Decentralized Heating Alternative**: A lower-cost option, where hot water is supplied only to select central buildings and digesters, while other buildings use local natural gas-fired systems. This reduces infrastructure requirements but increases fuel consumption. The estimated capital cost is around $12 million, with a 20-year NPV of approximately $30 million.

Key design considerations included higher electrical demand for compression, modifications to air permits, and maintaining a flare for off-spec gas. While RNG production increases external revenue opportunities (via RINs, voluntary markets, and sustainability programs), it also shifts MMSD away from self-sufficiency and raises on-site GHG emissions due to purchased energy.

ES.4 Recommendations and Next Steps

Findings from the biogas and plant-wide heating system evaluations were combined for an overall biogas/heating system recommendation. Table 1 shows the combined estimated project capital costs for each alternative presented in the biogas and plant-wide heating system evaluations. While the Null Pathway represents the lowest capital cost, it is not a viable option as discussed earlier. The range of capital costs for Pathway 1 and 2 alternatives is $37 to $46 million.

Table 1 Combined Estimated Project Capital Cost

Capital Costs					
Biogas and Hot Water Pathways	Null Pathway	Pathway 1 (Cogen) Centralized Alternative	Pathway 1 (Cogen) Decentralized Alternative	Pathway 2 (RNG) Centralized Heating Alternative	Pathway 2 (RNG) Decentralized Alternative
Biogas Capital Cost Estimate (2025 Dollars)(1)	$552,000	$26,614,000		$25,572,000	
Hot Water Capital Cost Estimate (2025 Dollars) (1)	$3,259,000	$19,748,000	$15,223,000	$19,748,000	$11,711,000
Biogas + Hot Water Capital Cost Estimate (2025 Dollars) (1)	$3,811,000	$46,362,000	$41,837,000	$45,320,000	$37,283,000

Notes:
(1) Capital costs are shown in 2025 dollars in this table.

Table 2 shows the combined annual operations and maintenance (O&M) costs for each combined alternative. Capital costs are escalated to 2028 dollars for NPV calculations by applying an assumed annual escalation rate of 3.5 percent, as described in TMs 4 and 5 found in Appendix D and E. The highest revenue potential and fastest payback is achieved with the Pathway 2 decentralized alternative.

Table 2 Combined Estimated Payback

Combined NPV Costs for All Alternatives					
Biogas and Hot Water Pathways	Null Pathway	Pathway 1 (Cogen) Centralized Alternative	Pathway 1 (Cogen) Decentralized Alternative	Pathway 2 (RNG) Centralized Heating Alternative	Pathway 2 (RNG) Decentralized Alternative
Biogas O&M Annual(1)	($416,000)	($2,218,000)		($4,495,000)	
Hot Water O&M Annual(2)	$58,000	$82,000	$196,000	$82,000	$347,000
Biogas + Hot Water Annual O&M	($358,000)	($2,136,000)	($2,022,000)	($4,413,000)	(4,148,000)
Biogas + Hot Water Capital Cost Estimate (2028 Dollars)(3)	$4,226,000	$51,402,000	$46,385,000	$50,247,000	$41,336,000
Simple Payback	12 years	24 years	23 years	11 years	10 years
Total Combined Weighted Score	2.5	3.3	3.4	3.0	3.5

Notes:
(1) Values shown in parentheses are revenues.
(2) Natural gas costs for hot water and digester heating are not included to avoid double counting as they are included in biogas O&M costs. Hot water O&M costs include natural gas cost for gas-fired equipment, electricity for HVAC systems and HVAC equipment O&M.
(3) Capital costs are shown in 2028 dollars in this table for NPV calculations.

Based on the evaluation completed, each of the pathways were found to be feasible and would meet MMSD's goals. The Pathway 2 decentralized alternative is recommended based on having the lowest capital cost ($37.3 Million), highest revenue potential, and highest combined scoring. It is noted that this

RNG/decentralized heating combination scored the highest as of the date of this Plan, however, because the project is anticipated to be several years out, these alternatives should be revisited in the future for final confirmation.

The following next steps are recommended when MMSD decides to move forward with the project:

1. Commence Preliminary Design to verify the biogas utilization approach and project delivery method (estimated to take 6 months).
2. Coordinate with the Wisconsin Department of Natural Resources (WDNR) at the 60 percent design level to develop an air permit application for the proposed modifications.
3. Proceed with final design/bidding/construction, which is estimated at total duration of 5 years.

SECTION 1 PLANNING CRITERIA

1.1 Project Background and Scope

The Heat and Power Improvements Facilities Plan was developed to identify and evaluate strategies to address aging heat and power infrastructure concerns at the NSWTP.

MMSD is committed to incorporating energy efficiency, conservation, and resource recovery into its operations. Previously, MMSD completed the 2020 EMMP, led by Carollo Engineers (Carollo) and Strand, to assess options for upgrading aging energy infrastructure at the NSWTP. The 2020 EMMP identified two key alternatives:

1. **Enhanced Baseline Alternative**, which upgrades the existing combined heat and power system with higher efficiency cogeneration engines and,
2. **Reduced Infrastructure Complexity Alternative**, which simplifies operations by converting the infrastructure to a biogas upgrading system for RNG pipeline injection.

The primary focus of this project was to develop a facilities plan to assess condition, establish need for improvement to enhance thermal system operations at MMSD, and evaluate the two biogas utilization options identified in the 2020 EMMP. This Project was completed in four phases as follows:

- Phase 1: Project Initiation:
  - Finalize the decision-making criteria, review and update the energy and GHG emission baselines from the 2020 EMMP, develop biogas and thermal demand projections for current and future conditions, and conduct existing infrastructure evaluation.
- Phase 2: Biogas Evaluation:
  - Evaluate and compare the following biogas pathways: null, cogeneration, and RNG production, as defined in Section 4. Recommend a base case technology after assessing the impacts to existing infrastructure and to the NSWTP air permit and conduct a triple-bottom-line (social, environmental, and financial) evaluation.

- Phase 3: Plant-wide Heating System Evaluation:
  - Develop flow diagrams to summarize capacities and demands for the existing plant-wide hot water system and compare and evaluate impacts to the plant-wide heating system for the cogeneration and RNG biogas alternatives.
- Phase 4: Facilities Plan Development:
  - Provide recommendations pertaining to the biogas use and plant-wide heating system modifications and conduct project delivery evaluation.
  - Update the energy baseline based on the recommended alternative and develop a Facilities Plan to summarize findings from Phases 2 and 3.

The evaluation and findings for the Heat and Power Improvements Facilities Plan are further described in the following Technical Memoranda provided as Appendices:

- TM No. 1 - Decision-Making Criteria, Envision™ Roadmap, Greenhouse Gas and Energy Baseline.
- TM No. 2 - Biogas Production and Thermal Demand Projections.
- TM No. 3 - Existing Infrastructure Evaluation.
- TM No. 4 - Biogas Evaluation.
- TM No. 5 - Plant-Wide Heating System Evaluation.
- TM No. 6 - Updated Envision™ Pre-Assessment.

1.2 Planning Criteria

A primary objective from the Kickoff and Visioning Workshop (WS) 0/1 was to establish the decision-making criteria. The chosen criteria, coupled with their relative weighting, provided quantitative metrics to aid MMSD's decision-making process. A summary of the chosen criteria and weighting is provided in Table 3. Weighting of each criterion is based on the scoring exercise that was performed during WS 0/1. The percent weighting of each criterion is based on the number of votes it received from MMSD staff in the workshop.

Table 3 Decision-Making Criteria

Category	Criteria	Description/Evaluation Metric	Weight
Financial	Capital Costs	Capital Cost (2025 $).	14%
	Life Cycle Costs	Capital Cost + Lifetime O&M Costs - Lifetime Revenue (2025 $).	20%
O&M	Operational Complexity/Difficulty	Complexity of and operator familiarity with process and associated equipment (qualitative score).	14%
	Operational Response/Risk/Uptime	Technology reliability, resilience, and issue response time requirements (qualitative score).	9%
Implementation	Future Site Flexibility	Ability to fit on the existing site and integrate with existing infrastructure (qualitative score).	9%
Other	Market Risk	Risk related to potential volatility in credit markets for Pathways 1 and 2 (qualitative score).	12%
	Energy Recovery	Energy capture efficiency.	10%
	Outside Dependence	Ability to address potential issues internally and level of reliance on outside resources (qualitative score).	12%

Notes:
$ - dollars; % - percent.

Life cycle costs were the highest priority criteria by MMSD staff, followed by capital costs and operational complexity/difficulty, next is energy recovery, and finally market risk and outside dependence.

1.2.1 Capital and Life Cycle Cost Assumptions

The economic analysis for the alternatives evaluated herein include the following elements:

- Capital costs.
- O&M costs.
- Revenue generated or costs offset.
- Payback period:
  - The estimated time required to recover the initial capital investment through the project's annual revenue or generated cash flow.
- A NPV to compare alternatives on a comprehensive total life cycle analysis basis.

Cost estimating was conducted by identifying equipment and construction costs in 2025 dollars. The total project cost estimates include direct and indirect costs as well as engineering, administrative, and legal services costs. Direct costs are provided for major project components and are based on equipment quotes or unit costs. Equipment quotes were solicited for the major pieces of equipment associated with each alternative. Allowances for structural, architectural, electrical, or instrumentation work are based on the total of the direct costs and differ for the alternatives, see Table 4 for the ranges of allowances used for each Pathway and Alternative. An estimating contingency recommended by the Association for the Advancement of Cost Engineering (AACE) International for a Class 4 level estimate was added to the direct costs to produce a total project cost.

Table 4 Construction Allowances, Contingencies, and Assumptions

Criteria	Assumption Used
Construction Allowances	
Equipment Installation	20% of equipment costs
Structural/Architectural Allowance	3 - 20% of direct costs
Mechanical System Allowance (HVAC, plumbing, etc.)	3 - 45% of direct costs
Electrical, I&C, Programming Allowance	20 - 40% of direct costs
Piping/Valve Allowance	30% of direct costs (biogas) Lump sum (hot water)
Construction Contingency	30% of direct costs
General Conditions, Contractor Mark-Ups, Escalation	
General Conditions Allowance	15% of direct costs, including allowances
Contractor Overhead and Profit	20% of direct costs, including allowances
Bonds and Insurance	3% of direct costs, including allowances
Engineering and Administrative Costs	
Engineering, Legal, and Administrative Fees	15% of construction costs(1)
Construction Management	10% construction costs

Notes:
I&C - instrumentation and controls.
(1) The value of 15-percent was confirmed by staff based on historical MMSD projects.

Life cycle costs were calculated for each pathway and sub alternative. Life cycle cost development assumed linear increases in the cost of energy, labor, and materials throughout the planning period.

All future costs were adjusted for inflation by applying an assumed annual escalation rate of 3.5 percent to the current costs for each year of the planning period. For comparison, all costs were calculated in terms of NPV for a planning analysis starting with construction in 2028 and operation in 2029 through 2048 (for a total operation of 20 years). A 2.5 percent discount rate was used based on the WDNR Municipal Wastewater Facility Planning website.

NPV unit cost assumptions are summarized in Table 5.

Table 5 Unit Cost Assumptions

Parameter	Value	Unit
Escalation		
Escalation Rate	3.5	%
Discount Rate	2.5	%
Utility Cost Assumptions		
Electricity (MG&E) Rate(1)	$0.111	$/kWh
Natural Gas Rate(2)	$5.461	$/MMBtu, $/Dth
Cost/Revenue Assumptions		
RFS Program Certification One-Time Cost in 2028	$150,000	$
RFS Program Annual Reporting Fees	$100,000	$
RIN Brokerage Costs	15%	Percentage of RIN Revenue
D3 RIN Value(3)	$2.20	$/RIN
Brown Gas Value(4)	$1.00	$/MMBtu
Annual Maintenance Cost	2-4%	of equipment HVAC system costs

Notes:
Dth - dekatherm; MG&E - Madison Gas and Electric; MMBtu - million British thermal units.
(1) Electricity rate calculated from MMSD's 2024 MG&E electricity bill (including demand charges) divided by MMSD's electricity usage in kWh.
(2) Natural gas rate calculated from MMSD's 2024 natural gas cost divided by MMSD's 2024 natural gas usage.
(3) Average D3 RIN value from 2015 through 2024. A value of $2.20/RIN equates to $28.60/MMBtu.
(4) Brown gas is the physical component of renewable natural gas (separated from the renewable attribute). Brown gas value takes into consideration the RNG sale price as well as transport fees and is based on data from operating installations.

1.3 Permitting Requirements

1.3.1 Existing Air Emissions Equipment and Limitations

MMSD must estimate air emissions from the NSWTP and report this data on an annual basis to the WDNR Air Management Program. MMSD's current air permit outlines air pollution compliance requirements for emissions equipment at the NSWTP. Emissions are calculated for all major emissions equipment using standard emission factors. Carbon monoxide (CO) and nitrogen oxide (NO_x) each have facility-wide permit limitations of 198,000 pounds per year (lb/year). The main emissions equipment addressed in the air permit are shown in Table 6. and a summary of the average air emissions reported in the Air Emissions Inventory Summary Reports from 2015 through 2019 for CO and NO_x is shown in Table 7.

Table 6 NSWTP Air Emissions Equipment

Air Permit Identification	Fuel	Air Permit Description(1)(2)
Process P10	Not Applicable	Anaerobic Digesters with Biogas Treatment System
Process P08	Biogas	Waste Gas Flare
Boiler B01	Biogas and Natural Gas	East Boilers (Three 8.0 MMBtuh Hot Water Boilers)
Boiler B02	Biogas	West Boilers (Three 4.18 MMBtuh Hot Water Boilers)
Boiler B03	Natural Gas	Bryan Boilers (Three 1.45 MMBtuh Hot Water Boilers)
Process B04	Biogas	Biogas Fired Engine Generators (Two 580 bhp Waukesha Engines)
Process B05	Biogas	Blower Engine (One 580 bhp Waukesha Engine)
Boiler B06	Biogas and Natural Gas	Fulton Boilers (Four 8.0 MMBtuh Steam Boilers)
Process P06	Not Applicable	Wastewater Treatment Plant Operations (Fugitive Emissions)
Process P11	Diesel	Emergency Generator (402 hp Diesel Fired Engine)
Process P18	Diesel	Emergency Generator (2010 hp Diesel Fired Engine)

Notes:
bhp - boiler horsepower; hp - horsepower; MMBtuh - metric million British thermal units per hour.
(1) Emissions are not reported for the anaerobic digesters, waste gas flare, and emergency generators.
(2) Process B05 (blower engine) will be eliminated in the future.

Table 7 Average NSWTP Air Emissions from 2015 through 2019

Air Permit Identification	Air Permit Description(1)(2)	CO Emissions (lb/year)	NOx Emissions (lb/year)
Process P08	Waste Gas Flare	3,700	300
Boiler B01 (Biogas and Natural Gas)	East Boilers (Three 8.0 MMBtuh Hot Water Boilers)	1,100	1,300
Boiler B02 (Biogas)	West Boilers (Three 4.18 MMBtuh Hot Water Boilers)	1,600	1,100
Boiler B03 (Natural Gas)	Bryan Boilers (Three 1.45 MMBtuh Hot Water Boilers)	400	500
Process B04 (Biogas)	Biogas Fired Engine Generators (Two 580 bhp Waukesha Engines)	43,000	91,300
Process B05 (Biogas)	Blower Engine (One 580 bhp Waukesha Engine)	5,900	26,500
Boiler B06 (Biogas and Natural Gas)	Fulton Boilers (Four 8.0 MMBtuh Steam Boilers)	1,900	1,800
Total		57,600	122,800

Notes:
(1) Emissions are not reported for the anaerobic digesters, waste gas flare, and emergency generators.
(2) Process B05 (blower engine) will be eliminated in the future.

1.3.2 Air Emissions Regulatory Considerations

As shown in Table 2, MMSD currently emits about 122,800 lb/year of NOx, roughly 62 percent of its allowable limit (198,000 lb/year), most of which comes from the biogas blower engine and biogas engine generators. Due to the facility's classification as a synthetic minor source air permit, emissions are capped at 200,000 lb/year for any criteria pollutants. If emissions rise above this threshold, MMSD would need to apply for a revised air permit as a major source.

Proposed changes to WDNR rules (NR 439 and NR 410) may impact MMSD by modernizing compliance requirements and increasing permitting fees. New engines will have lower emission factors than existing engines due to recent regulations such as New Source Performance Standards (NSPS). Adding high-strength waste for co-digestion or conversion to all thermophilic digestion will impact biogas quantity and quality due to increased loading and biogas production respectively. Any upgrades or changes will require coordination with WDNR, including potential construction and operation permit modifications and air dispersion modeling for compliance with air quality standards.

SECTION 2 BIOGAS DEMAND AND THERMAL PROJECTIONS

This section documents the biogas production and thermal demands for current and future conditions. These biogas and thermal demand projections were applied in the biogas and plant-wide heating system evaluations, respectively.

2.1 Biogas System Overview

The NSWTP produces biogas from the anaerobic digestion of their primary sludge (PS) and waste activated sludge (WAS) using two acid phase digesters and nine methane phase digesters, of which six are operated as mesophilic and three are operated as thermophilic. The thickened combined sludge (PS and WAS) is first processed in acid phase digesters, then transferred to mesophilic digesters, with up to 25 percent redirected to thermophilic digesters for Class A biosolids production. Note that acid phase digestion generates "sour gas" as a by-product, high in hydrogen sulfide (H_2S) concentration and low in methane. The sour gas is kept separate from the biogas and is not used as fuel for any equipment. In addition to thickened combined sludge, NSWTP can also process high-strength waste (HSW) and FOG to boost biogas production, though this is not done regularly. Biogas from the digesters is directed either to gas conditioning or to two gas-holding sludge storage tanks, with system pressures controlling gas flow to end-use equipment.

2.1.1 Biogas Conditioning and End Uses

All biogas used as fuel at the NSWTP is treated through a gas conditioning skid, where it is pressurized by three gas booster blowers and is removed of moisture, hydrogen sulfide, and siloxanes. After the gas is pressurized and conditioned, the biogas is delivered at 2 to 4 pounds per square inch (psi) to various end uses, including two engine-generators, one engine-driven blower, six hot water boilers, and four steam boilers. Although Shop 1 boilers can use biogas, they typically run on natural gas due to low biogas

pressure. When biogas supply is insufficient, plant staff can blend air and pipeline natural gas using two blended gas boosters to supplement fuel needs. Excess biogas is burned off in a waste gas burner, and safety valves on digesters and storage tanks prevent over-pressurization by venting gas if needed.

2.1.2 Historical Biogas Production and Quality

The NSWTP currently produces approximately 900,000 cfd of biogas in its nine anaerobic digesters. Figure 1 shows all biogas used by facility equipment and flared excess, based on data from June 2020 to July 2024. Biogas production increased over this period, primarily due to higher influent loadings, along with increased FOG waste and trucked septage. These wastes are processed through the primary clarifiers before reaching the digesters, increasing organic loading as well as biogas output.

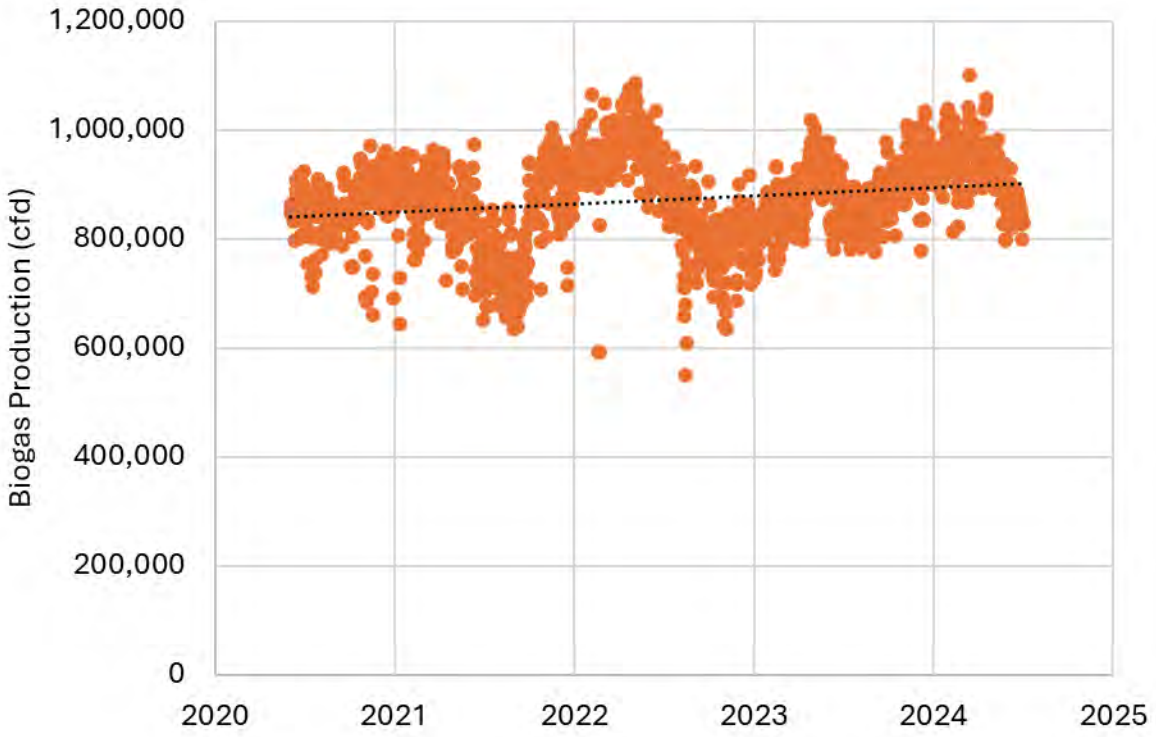

Figure 1 NSWTP Historical Daily Biogas Production (2020 to 2024)

The quality of biogas determines the level of treatment required for the evaluated alternatives. The biogas quality data for constituents of interest are summarized in Table 8. The raw biogas composition was typical of municipal water resource recovery facilities (WRRFs), with relatively low H_2S levels (80-500 parts per million [ppm]) from the mesophilic and thermophilic digesters due to H_2S partitioning in the acid phase digesters and ferric chloride addition to mesophilic digesters.

Table 8 NSWTP Historical Biogas Quality Summary

Constituent	Value
Meso/Thermo Biogas	
CH_4, % (Average)	61%(1)
CO_2, % (Average)	37%(2)
Nitrogen, % (Average)	0.8%(2)
Oxygen, % (Average)	0.2%(3)
H_2S, ppm	80 - 500(1)
Siloxanes, ppbv	100 - 700(4)
Acid Biogas	
H_2S, ppm	15,000 - 20,000(5)

Notes:
CH_4 - methane; CO_2 - carbon dioxide; ppbv - parts per billion by volume.
(1) Based on daily data for April 2023 to September 2024.
(2) Based on intermittent daily data for November 2023 to January 2024.
(3) Based on daily data for August 2021 - August 2024.
(4) Based on lab test results for February 2021 - December 2023.
(5) Based on lab test results for samples collected in 2014.

2.1.3 Biogas Production Projections

Biogas production projections for the NSWTP were developed using biogas data from March 2022 to March 2023 and future influent biochemical oxygen demand (BOD) loading forecasts through 2050, based on the 2023 Influent Flow and Loading Projections TM (Brown and Caldwell/Strand, 2023). Biogas production was projected at the same rate of increase as the annual average influent BOD loading projections—approximately 0.9 percent per year. Figure 2 presents the anticipated projected biogas production through the year 2050. The projections in this Figure match very closely to those from the 2020 EMMP.

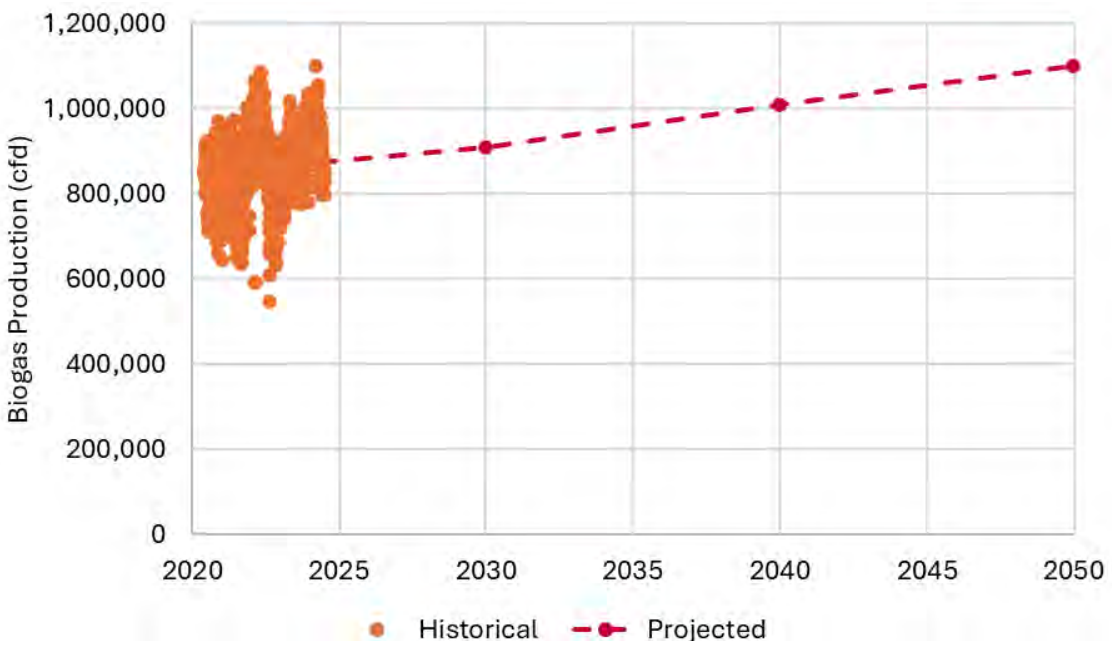

Figure 2 NSWTP Biogas Production Projections through 2050

To account for potential changes in future biogas production, projections were developed for two alternative scenarios: adding hauled FOG waste directly to the digesters and converting all digesters to thermophilic operation. Adding FOG could significantly boost biogas output, with an estimate of an additional 144,000 cfd based on the 2020 EMMP. Converting all methane phase digesters (Digesters 4-9) to thermophilic operation is projected to increase biogas production by about 10 percent due to greater volatile solids reduction. Both scenarios are compared with baseline projections in Table 9. The baseline and hauled waste scenarios assume the current mix of mesophilic and thermophilic digester operation.

Table 9 Comparison of Biogas Production Projections for Baseline and Alternative Future Conditions

	Biogas Production Projections (cfd)		
	Baseline	Hauled Waste	Thermophilic Digestion
2022	859,000	859,000	859,000
2030	911,000	1,055,000	1,002,000
2040	1,009,000	1,153,000	1,110,000
2050	1,102,000	1,246,000	1,212,000

2.2 Thermal Heating System Overview

Thermal demands at the NSWTP can be broken into two categories: building related demands and treatment related (process) demands. Future process demand projections were developed based on the projected influent loadings and after considering the impacts of eliminating the gas-driven blower, expanding thermophilic digestion, and implementing biosolids drying.

2.2.1 Existing Thermal Heating System

The NSWTP has four hot water loops: the North loop is separate and serves buildings at the north end of the plant, while the East, West, and Central loops are interconnected and supply heat to the rest of the facility. The main uses of the hot water system include digester heating, HVAC systems (space heaters and absorption chiller), and struvite dryers.

2.2.1.1 Cogeneration and Boiler Systems

The NSWTP's hot water system is primarily heated by waste heat from the two cogeneration engines and one engine-driven blower, capturing heat from lube oil and jacket cooling water. The two 475 kilowatt (kW) engine-generators supply up to 2.0 MMBtuh each to the East loop, while the engine blower provides up to 2.0 MMBtuh to the West loop. All three engines are over 30 years old and due for replacement, with the blower expected to be retired soon.

Additional heating is provided by three West Boilers (4.4 MMBtuh each) for the Central loop and three East Boilers (8.8 MMBtuh each) for the East loop. The hot water loop is maintained at 208-212 degrees Fahrenheit (°F), prioritizing engine jacket water and lube oil heat recovery, with exhaust heat used as needed. Boiler operation varies by season, with more units running in winter. The west boilers are given priority over east boilers. For digester heating, nine spiral heat exchangers maintain temperatures for mesophilic and thermophilic digesters, supplemented by two tube-in-tube exchangers for sludge preheating and two spiral exchangers for cooling sludge before storage to aid downstream thickening operation.

2.2.1.2 Steam Heating System

NSWTP operates four Fulton 150 bhp steam boilers, installed in 2012, to supply steam solely to the acid phase digesters. These steam boilers used digester gas as the fuel source. Two boilers operate in a lead-lag setup to maintain 60 to 70 psi, firing based on demand, often firing multiple times per hour due to inconsistent loading. All four boilers are rotated weekly. The active steam hydroheaters inject steam into a recirculating sludge stream to increase the temperature of the acid phase digesters to mesophilic conditions. The steam pressure immediately before injection into the hydroheaters is 65 psi. The steam injectors operate one at a time and are rotated weekly.

2.2.2 Building Thermal Demands

Building related thermal demands can be broken into two categories: ventilation heating and envelope heating. Ventilation heating is the amount of energy required to heat the return air or outside air to the desired air temperature supplied to a space. The envelope heating demand is the amount of energy required to offset the energy lost through building walls, roof and floors during cold weather months. Envelope heating equipment includes unit heaters, radiators, and the absorption chiller.

Thirty-six buildings and five galleries were reviewed for building related thermal demands. Table 10 summarizes the total heating loop demand on an annual basis.

Table 10 Current and Future Building Related Total Annual Thermal Demands

Building	Current Total Demand		Future Total Demand	
	Ventilation(1) (MMBtu/year)	Envelope(2) (MMBtu/year)	Ventilation(1) (MMBtu/year)	Envelope(2) (MMBtu/year)
East, Central, West Interconnected Loop Total	29,400	10,800	37,300	15,500
North Loop Total	1,900	3,500	1,900	4,000
Total	31,300	14,300	39,200	19,500

Notes:

(1) Total ventilation demand is estimated using bin weather data for Madison, Wisconsin for outside air conditions on a heating design day. The current ventilation demand is based on heating outside airflow at current rates associated with the noted hot water loops. The future ventilation demand is based on heating outside airflow at proposed rates noted in the Facility HVAC Study 2021 prepared by Strand Associates, Inc. Estimates for both current and future demands were developed to reflect the amount of time the different pieces of HVAC equipment are in operation.

(2) Total envelope demand is estimated using building envelope modeling software on a heating design day. The current envelope demand was determined based on the existing connected unit heater capacity. Existing drawings were used to obtain existing unit information. When capacity information was unavailable, a comparison was made between similarly sized unit heaters, pipe connections and unit dimensions, to project the capacity. The future envelope demand is calculated using building modeling software to analyze the structures associated with the noted hot water loops. A simple model was developed for each structure using the existing wall, roof, and floor assemblies. The future demand value represents the theoretical envelope heat required on a heating design day.

The Capital Project Infrastructure Placement Plan developed by TKDA in July 2023 for the NSWTP laid out plans for improvement and expansion on the plant. This includes proposed additions to existing buildings and new buildings that will require heat. Table 11 summarizes the projected thermal heat demands to these spaces and what loop the proposed items would be connected to.

Table 11 Future Projected Annual Thermal Demands of New Buildings

Building	Proposed Area (ft^2)	Total Heat Demand (MMBtu/year)	Connected Loop
Metrogo Fleet Storage and Maintenance(2)	23,500	1,900	Central, East, and West loop
Septage Receiving Facility(1)	2,880	400	Central, East, and West loop
Campus Security/Safety Improvements(1)	30,800	3,700	Central, East, and West loop
Storage and Maintenance Shop Expansion(2)	19,000	1,500	Central, East, and West loop
Plant Expansion(3)	None Provided	1,600	Central, East, and West loop and North loop
Solids Digestion Expansion(4)	None Provided	Unknown	Central, East, and West loop

Notes:
Btu - British thermal unit; ft^2 - square feet.
(1) Total heat demand includes building and ventilation heat loads. Building envelope load assumed a demand of 30 Btu/ft^2 using the areas proposed in the Capital Project Infrastructure Placement Plan. Ventilation load is estimated using bin weather data for Madison, Wisconsin with 10 percent outside air.
(2) Total heat demand includes building and ventilation heat loads. Building envelope load assumed a demand of 30 Btu/ft^2 using the areas proposed in the Capital Project Infrastructure Placement Plan.
(3) Capital Project Infrastructure Placement Plan proposed a new blower building, but not area was provided. Heat load assumes a new building similar to existing Blower Building No. 2.
(4) No area provided in the Capital Project Infrastructure Placement Plan.

2.2.3 Process Thermal Demands

In addition to building thermal demands, the NSWTP hot water heating system provides process heat for the digesters and the struvite recovery dryers. A schematic representation of the West-Central-East hot water-based heat loop is shown in Figure 3.

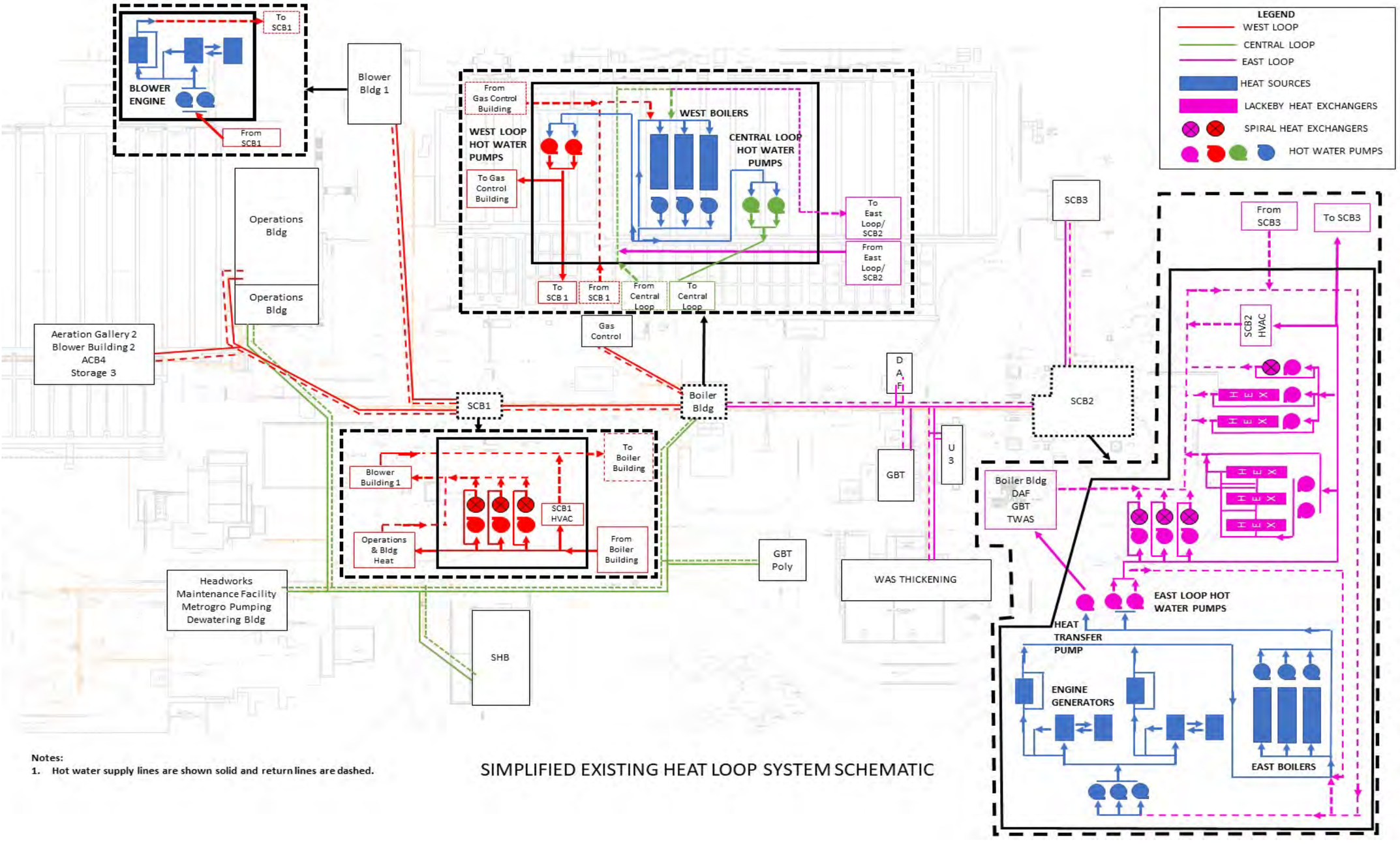

Notes:
1. Hot water supply lines are shown solid and return lines are dashed.

SIMPLIFIED EXISTING HEAT LOOP SYSTEM SCHEMATIC

Figure 3 Existing NSWTP Hot Water Heat Loop Schematic

Thermal energy demands at NSWTP were estimated for 2020 and 2050, to assess thermal requirements for building heating/cooling, sludge heating for digestion, digester tank losses, and struvite drying. Table 12 summarizes the total maximum and minimum thermal energy demand estimated by season in 2020 and 2050. Although the steam boilers are not interconnected with the hot water heating loops, the thermal demands for the acid phase digestion system are included for completeness. Additional scenarios for the conversion of Digesters No. 4 through No. 9 to thermophilic operation and the implementation of biosolids drying are provided in Table 12. These values below include steam heat for digestions and hot water for digestion, Struvite drying, and building heat. Additionally, the Biosolids Drying Total Demand row includes hot water for Biosolids drying.

Table 12 Current and Future Thermal Demands for Current Operation, Conversion to Thermophilic Digestion and Implementing Biosolids Drying

	Current (Year 2020) Demand	Projected (Year 2050) Demand
Current Operation Total Demand(1) (MMBtu/year)	90,200	107,500
Thermophilic Digestion Total Demand(2) (MMBtu/year)	108,000	129,700
Biosolids Drying Total Demand(3) (MMBtu/year)	186,200	239,500

Notes:
gpd - gallons per day
(1) Based on sludge flows/loads to reflect digester feed flow of 218,000 gpd in 2020 and projected feed flow of 291,000 gpd in 2050. Sludge heating based on summer and winter conditions for sludge heating as defined in Applied Technologies' 2011 Design Memorandum No. 5: 11th Addition to the NSWTP. Methane Phase mesophilic and thermophilic sludge heating demands for spring and fall are estimated as averages between the summer and winter values because sludge-specific information was provided only for summer and winter in the referenced memorandum. Digester tank losses are based on the values in this same memorandum, corrected for mesophilic operation in Digesters No. 4 through No. 9 and thermophilic operation in Digesters No. 1 through No. 3
(2) Sludge heating based on summer and winter conditions for sludge heating as defined in Applied Technologies' 2011 Design Memorandum No. 5: 11th Addition to the NSWTP. Methane Phase mesophilic and thermophilic sludge heating demands for spring and fall are estimated as averages between the summer and winter values because sludge-specific information was provided only for summer and winter in the referenced memorandum. Digester tank losses are based on the values in this same memorandum, corrected for thermophilic operation in Digesters 1-9.
(3) Sludge heating based on summer and winter conditions for sludge heating as defined in Applied Technologies' 2011 *Design Memorandum No. 5: 11th Addition to the NSWTP*. Methane Phase mesophilic and thermophilic sludge heating demands for spring and fall are estimated as averages between the summer and winter values because sludge-specific information was provided only for summer and winter in the referenced memorandum. Digester tank losses are based on the values in this same memorandum, corrected for mesophilic operation in Digesters 4-9 and thermophilic operation in Digesters 1-3.

Thermal demands are anticipated to increase by approximately 19 percent when comparing the baseline to year 2050. Converting Digesters No. 4 through No. 9 to all thermophilic digestion increases thermal demand by approximately 21 percent above the baseline. Biosolids drying would have a substantial impact on energy use by more than doubling the thermal demand above the baseline and would require significant natural gas usage.

SECTION 3 EXISTING INFRASTRUCTURE EVALUATION

The Carollo/Strand team conducted an existing infrastructure evaluation of the biogas and thermal heating systems in September 2024. The asset condition inspections and feedback from MMSD staff were coupled with the MMSD asset registry to determine the status and operational challenges of the existing infrastructure. This information was used to inform recommended infrastructure upgrades and is summarized in this Section. TM3 provides detailed evaluation of all biogas and thermal equipment and assets in each building at the NSWTP.

3.1 Biogas System Evaluation Results

The results of the existing infrastructure evaluation, shown in Figure 4, suggest that the biogas system asset conditions range from good to very poor. Asset conditions were summarized based on observations and feedback received from MMSD staff during the site walk:

- The engine blower and engine generators were in good physical condition aside from some minor leaks observed, having been fully overhauled in the last two years.
- The radiators for the engine blower and engine generators were found to be in poor condition and need recoating as significant corrosion was observed at various exposed locations.
- The heat recovery and non-heat recovery exhaust silencers were in very poor condition due to extensive corrosion that created an exhaust leak on the non-heat recovery exhaust silencer for engine 2 and its sidewalls were also wrinkling/collapsing. The silencers are due to be replaced in 2026.
- The gas conditioning skid and its subcomponents were observed to be in generally fair condition. TM3 provides more details on the condition of gas conditioning subcomponents.
- The floating gas covers on the sludge storage tanks were noted to be in good visible condition.

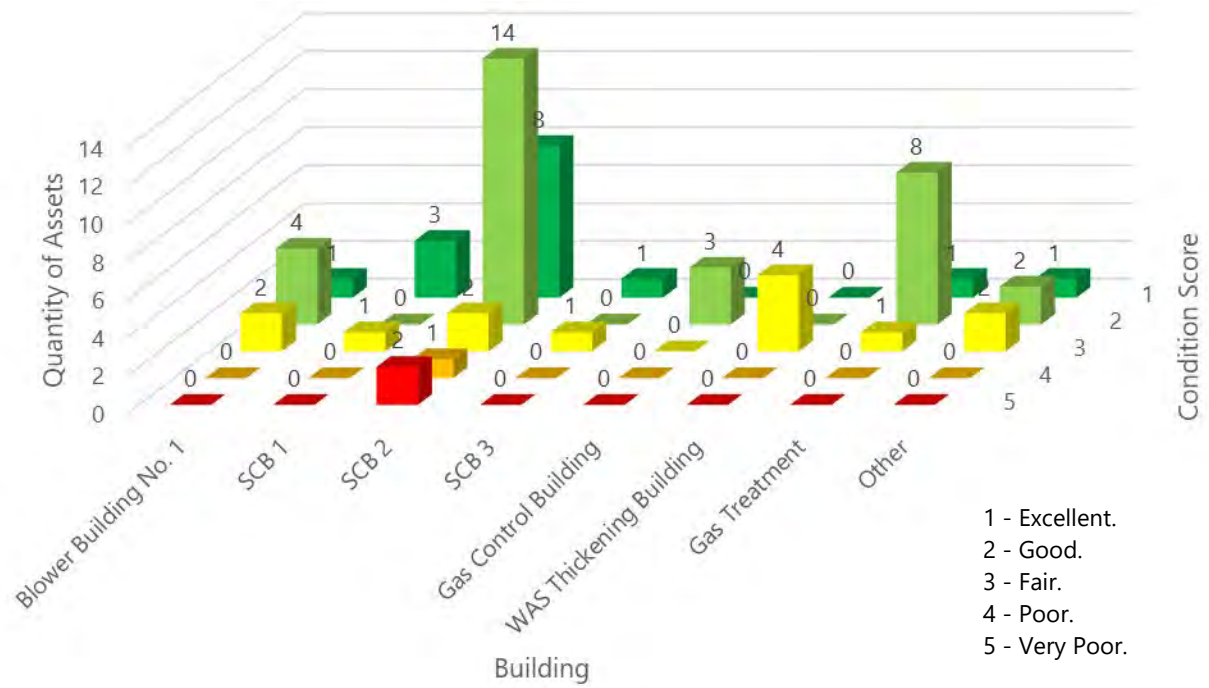

Figure 4 Consolidated Condition Scores for all Biogas Assets by Building

3.1.1 Operational Issues

The biogas system is aging and presents inefficiencies and deficiencies that limit overall performance. The following is a summary of notable operational challenges with existing assets that were identified and discussed as part of the existing infrastructure evaluation:

- The engine blower and engine generators are past their expected life span. The radiators are undersized for the existing engines and have limited engine cooling capacity that prohibits optimal operation. If kept in operation under the Null Pathway, this equipment would need to be taken out of service more often.
- Feedback from MMSD on the existing gas conditioning skid highlighted that the biogas system recently has experienced occasional pressure challenges due to plugging on the H_2S vessel discharge piping, which would create an obstacle for any future biogas system. Mechanical issues combined with the media changeout schedule caps the overall output of conditioned gas available for end uses.
- Feedback on the sludge storage tanks and the floating gas covers revealed that the gas holders have problems working together as a system and work better independently. This led to reduced gas capacity to half the maximum amount and could be due to issues with struvite formation from thermophilic sludge, and buoyancy issues. Reduced gas storage capacity could pose an issue in the future as biogas production is expected to increase over time and could be supplemented under an alternative future condition with co-digestion or exclusively thermophilic digestion.

3.2 Thermal Heat System Evaluation Results

The thermal heating assets were found to be in overall good condition as shown in Figure 5, and many components were serving well beyond typical service life and will require maintenance in the future. The following is a summary of asset conditions:

- All the heat exchangers reviewed during the site visit were noted to be in good physical condition, many of which were operating past typical service life.
- Most of the heating hot water pumps were operating well. Pumps and pump components are replaced as needed per staff feedback. TM3 can be found in Appendix C and provides detailed input on the condition of pumps and heat exchangers located in boiler/blower/sludge control buildings.
- While regularly monitored, mineral buildup was noted at different locations on site. This indicates water chemistry has been out of spec at times due to excess mineral deposits in the water.
- The west boilers located in the boiler building were operating well beyond typical service life. Sections of underground hot water piping have been replaced due to failures and leaks. Maintenance staff indicated that the buried piping associated with the north heating hot water loop was failing and would not recommend connecting the north loop with the east, west, and central loop.

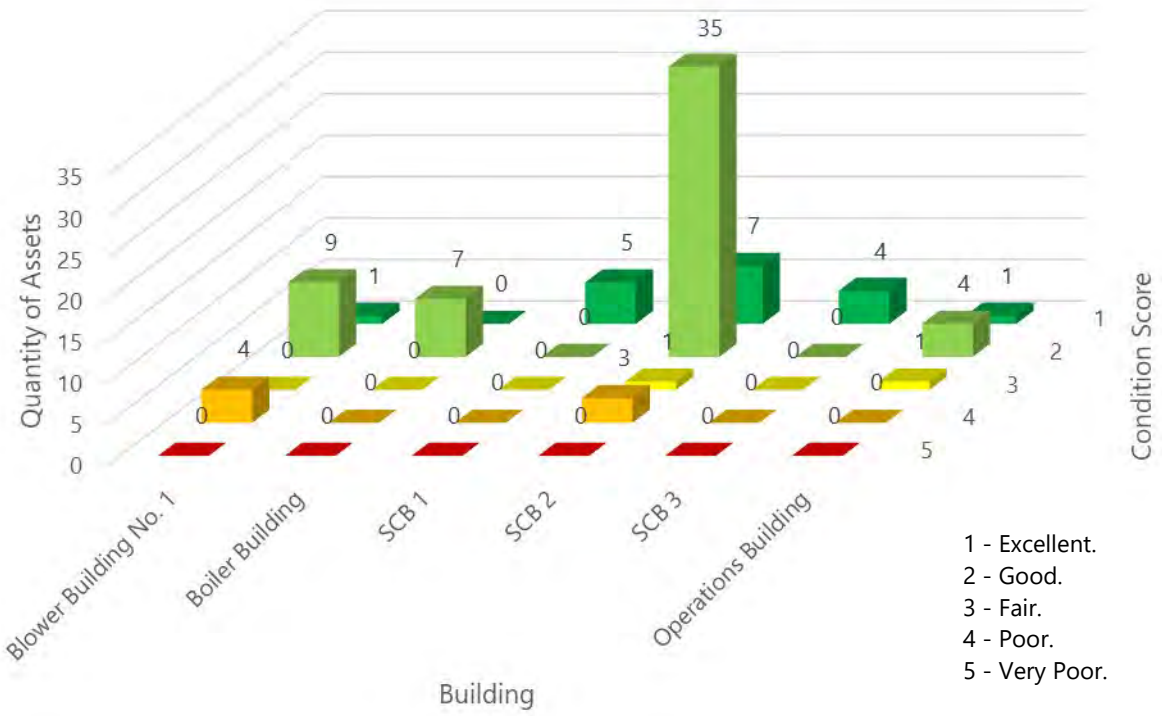

Figure 5 Consolidated Condition Scores for all Thermal Assets by Building

3.2.1 Operational Issues

In general, the plant has performed maintenance to extend the life of the systems and equipment to serve beyond a typical service life. However, several operational issues were noted which are summarized below:

- In winter, the high heat demand and operation of the struvite drying process can combine to drop the central loop supply temperature below acceptable levels, forcing the staff to shut off the struvite drying process. This is due to a large pressure drop in the existing buried piping, undersized hot water distribution pumps, and low gas pressure availability at the boilers.
- Typically, in the coldest parts of winter, there is not enough biogas pressure to serve the west boilers, shutting off the third boiler due to low gas pressure.
- Recovered heat from the engine blower or generators is supplied to the hot water system even during times of the year when not needed, disrupting system temperatures.
- The current piping and pumping arrangement from Sludge Control Building No. 2 (SCB2) to the boiler building is not sufficiently sized to transport the flow of hot water necessary to heat the entire site.
- There is a lack of an overall hot water control system. This prevents integrating the heat generating assets throughout the site to appropriately stage and modulate equipment to meet the heat demands. The 2020 EMMP discusses how the complexity of the system requires extensive operator expertise.

3.3 Summary of Existing Infrastructure Evaluation

While some of the biogas assets were found to be in good to fair condition, the engine blower and engine generators, which are at the heart of the biogas utilization system, are past their expected life span. This system has several ongoing issues associated with operation of equipment at the end of its service life. The undersized radiators limit engine cooling capacity and the current hot water infrastructure doesn't allow all heat produced by the engines to be distributed to the various heat demands throughout the plant.

Similarly, the hot water system includes equipment that is beyond its expected service life. The hot water system also has several operational issues related to pressure variability and the ability to move heat to the appropriate areas of the plant. In general, an overall replacement of the biogas utilization system and significant upgrades to the hot water system are recommended based on the existing infrastructure evaluation.

SECTION 4 BIOGAS EVALUATION

This section documents the findings from the evaluation of the following pathways to beneficially use biogas at NSWTP: Null, Pathway 1 (Cogeneration), and Pathway 2 (RNG), as described below.

- **Null Pathway.** Existing operation with no major changes. Existing cogeneration engines, engine blower, and hot water infrastructure remain in use with regular maintenance and are rebuilt as needed. The existing chiller and booster blower in the digester gas conditioning system will be replaced with new equipment. The remaining gas conditioning system will remain as-is (tanks, heat exchangers, piping, etc.).
- **Pathway 1 - Cogeneration.** Replacement of existing cogeneration engines with new upsized, higher-efficiency cogeneration engines in a new cogeneration building, replacement of gas conditioning system, and decommissioning of engine blower. The intent is for all biogas to be utilized in the new engines for heat and power production.
- **Pathway 2 - RNG.** Replacement of existing cogeneration engines with a biogas upgrading system for pipeline injection of RNG and decommissioning of engine blower. The intent is for all biogas to be utilized in the new biogas upgrading system for RNG production.

4.1 Financial Market Considerations

This section identifies the revenue markets for cogeneration and RNG that were considered in the economic evaluation of the three pathways.

4.1.1 Pathway 1 - Cogeneration

The current value of selling renewable electricity to the local power grid is less than the cost of purchasing electricity in most markets. Therefore, the main value of renewable electricity from cogeneration derives from using the produced electricity onsite and reducing the amount of electricity needed to be purchased

externally. Additionally, the following opportunities were identified to potentially increase revenue within Pathway 1:

- **Renewable Energy Certificates (RECs):** RECs are a market-based instrument used to substantiate renewable electricity use claims. Revenues are generated through the sale of RECs to either compliance or voluntary buyers, with each REC representing 1 megawatt-hour (MWh) of electricity generated and delivered to the electrical grid from a renewable source. The Renewable Portfolio Standards (RPS) programs and prices vary from state to state, and a REC value of $3/MMBtu was assumed for the purpose of evaluation in TM4. It should be noted that this team is not aware of any entities in Wisconsin who are receiving revenue via RECs.
- **Renewable Fuel Standard (RFS) Program:** The RFS program is managed by the EPA and is used to offset carbon emissions in the transportation sector. The program obligates fossil fuel refiners and importers to purchase a certain amount of renewable attributes. Producers of renewable fuels produce these attributes, called RINs. The RFS program has introduced a pathway to generate electric renewable identification numbers (eRINs) from electricity produced from qualifying renewable biomass. Revenues would be generated through the sale of the eRINs. The draft rulemaking proposed an eRIN equivalence value of 6.5 kWh per RIN, which translates to eRIN price of $0.34/kWh for D3 RIN (see below for D3 RIN definition) based on average RIN prices. While the EPA originally intended to finalize the eRIN program in 2023, in the Final RFS Rule for 2023, 2024, and 2025, the EPA delayed finalization due to the volume and complexity of stakeholder comments received in response to the December 2022 draft. As such, eRIN revenue is not included in this evaluation.
- **Inflation Reduction Act (IRA) Production Tax Credit (PTC).** The IRA included incentives for biogas projects in two ways. First, projects under construction by the end of 2024 were eligible for the Investment Tax Credit, which is structured as a direct payment of a percentage of the project cost. Projects under construction in 2025 and beyond are eligible for the PTC, which provides tax credits based on the amount of energy produced. Discussions are recommended with a tax professional to determine eligibility, requirements, and revenues for PTCs during preliminary design. No PTC credits were included in these evaluations.

4.1.2 Pathway 2 - RNG

The value of RNG can be broken into the value of the physical natural gas molecules (usually tied to a regional gas index) and the value of its environmental attribute, which typically represents most of the RNG value. The following are opportunities to monetize this resource:

- **RFS Program:** To become a RIN producer through the RFS program, MMSD would need to become certified with the EPA. This certification is typically managed by a third-party RIN broker. The RFS program defines the following four types of renewable fuel: cellulosic biofuel, biomass-based diesel, advanced biofuel, and renewable fuel. The biogas produced by municipal digesters can either be designated as cellulosic biofuel (D3) or advanced biofuel (D5). The EPA has defined biogas produced from municipal wastewater sludges as a D3 RIN, whereas D5 RINs are issued for biogas produced from co-digestion of external food wastes and FOG. It was assumed that MMSD's digester gas qualifies as a D3 RIN. Gas produced from external high strength wastes (if considered) would be classified as a D5 RIN. Revenues are generated through the sale of RINs, credits which each represent 77,000 Btu of biogas. A D3 RIN value of $2.20/RIN was assumed for the biogas evaluation, which is the average D3 RIN value over the last 10 years.

- **Voluntary Markets:** These local, national, and international markets are implemented by either corporations or natural gas utilities that desire to purchase renewable natural gas, which in some cases, have compliance requirements to achieve long-term sustainability goals. Revenues are generated through the sale of RNG to these corporations/utilities. Voluntary market pricing typically ranges from $10 to $20 per MMBtu, and a value of $15/MMBtu was assumed for the purposes of the biogas evaluations. It is reasonable to assume 100 percent of MMSD's RNG could be purchased by a single voluntary buyer. Like the RFS program, a third-party carbon broker would likely manage RNG sales within the voluntary market. Voluntary markets are considered to be less sensitive to pricing volatility as compared to the RFS program.

4.2 Null Pathway

The Null Pathway assumes continuation of the existing operations with no major changes and provides the baseline alternative to compare existing operations to for Pathways 1 and 2. The existing cogeneration engines, engine blower, and hot water infrastructure would remain in use with regular maintenance and rebuilds throughout the planning period as needed. A process flow diagram of the existing system is provided in Figure 6.

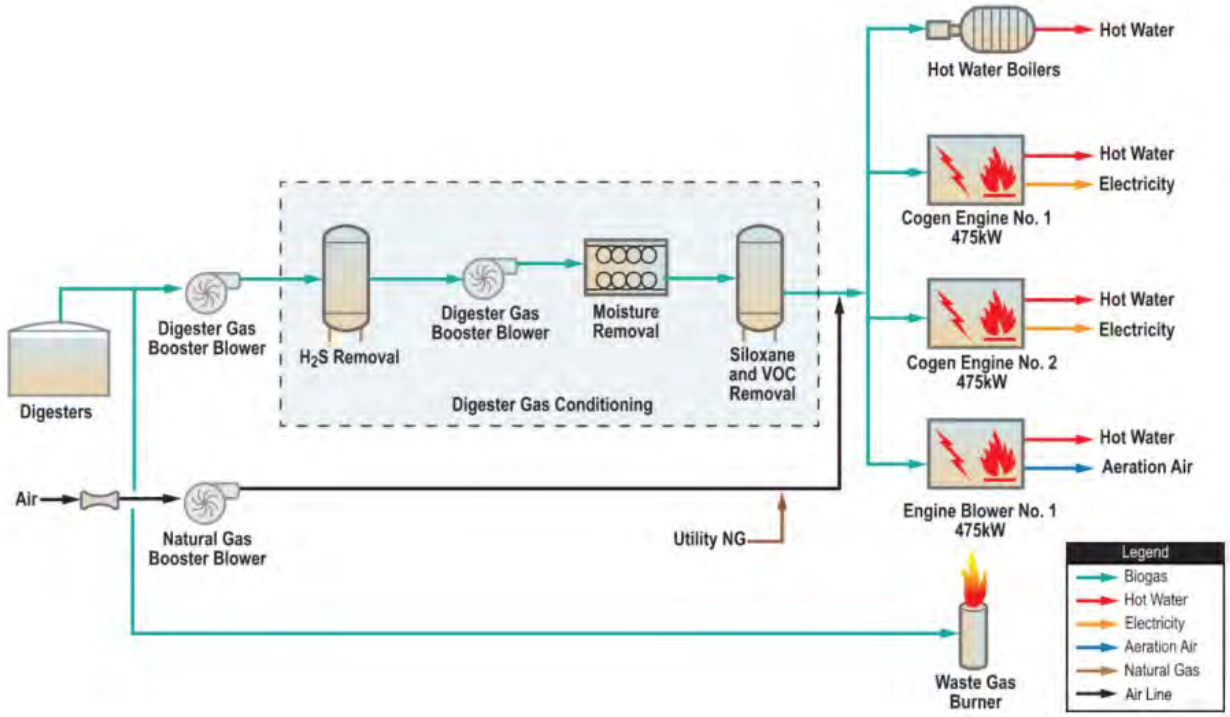

Figure 6 Null Pathway Process Flow Diagram

Waukesha Engine, the manufacturer of the three existing biogas-fueled engines used for the two cogeneration systems and the engine-driven blower, indicated the engines could be updated with new components as required over the 20-year life cycle period while the controls and ignition systems would need to be updated with new systems to operate over the same time span.

The following were assumed for capital costs under the Null Pathway: replacement of the existing digester gas booster blower and chiller with in-kind units due to their age and upgrading the engine blower controls. Upgraded radiators are recommended if MMSD pursues the Null Pathway but were not included in the capital costs.

NPVs were developed to compare the Null Pathway to Pathways 1 and 2, as shown in Table 13. The project cost was escalated to 2028 dollars to calculate the NPV of capital at the beginning of the 20-year cycle. The Null Pathway life cycle costs included rebuilds and ongoing maintenance throughout this period. It was assumed that the biogas distribution to end use equipment will remain consistent with historical gas utilization based on daily process data from 2020 through 2024: engine generators (60 percent), engine blower (15 percent), hot water boilers (12 percent), steam boilers (7 percent), and flare (6 percent). The capacity of the existing conditioning system was assumed to be 630 scfm based on conversations with plant staff. Therefore, the life cycle costs assumed that any biogas flows above this value were sent directly to the waste gas flare.

Table 13 Null Pathway Net Present Value

	Costs/(Revenues)
Estimated Project Cost (2028 dollars)	$612,000
Annual Costs	
Natural Gas Cost for Process and Building Heat, $/year	$406,000
Cogeneration and Gas Conditioning System O&M, $/year	$136,000
Engine Generator Rebuilds (annualized), $/year	$75,000
Gas Conditioning Media Replacement, $/year	$57,000
Annual Revenues	
Electricity, $/year(1)	($1,090,000)
Net Annual Costs/(Revenues), $/year	($416,000)
Net Present Value (2028 dollars)	($7,627,000)

Notes:
(1) Cogeneration revenue represented as electrical off-sets or saved electrical costs.

The annual costs associated with the Null Pathway were similar to the savings associated with electricity production. In addition, operability challenges regularly prevent the system from operating as intended and maximizing the theoretical energy recovery. Therefore, maintaining operation of the existing system was not recommended in the long-term. The team evaluated if the existing waste gas burner and associated gas control equipment can handle the projected digester gas production based on a future gas production of 1.1 million standard cubic feet per day (scfd) with a 30 percent peaking factor. The analysis showed excessive pressure drop through the existing back pressure regulator valve and flame trap assembly at peak conditions, which could increase digester pressure and lead to digester gas relieving through the pressure relief valves. Additionally, the calculated gas velocity through the waste gas burner was found to be higher than recommended. Gas safety equipment such as waste gas burners should be sized for the facility's entire gas production capability. Carollo recommends analyzing and upgrading these systems in a future design project to safely manage peak digester gas production.

4.3 Pathway 1 - Cogeneration Evaluation

Pathway 1 includes replacement of MMSD's two existing Waukesha 475 kW engine generators and existing engine blower with a new cogeneration system that is sized to utilize all the biogas produced at the NSWTP under projected biogas flows. This new, higher capacity system would remove H_2S, siloxanes, and moisture from the biogas, then pressurize it for use in the engines and boilers. A process flow diagram of Pathway 1 is presented in Figure 7. The priority for biogas use would be the new cogeneration system, and the boilers would only receive biogas if production exceeded the cogeneration system capacity or when the cogeneration system is out of service. The new boilers will be dual fuel boilers that allow for digester gas or natural gas, but not a blend (as currently operated), so the natural gas mixing system can be removed. Biogas will be collected from the digesters, sent through H_2S removal vessels and boosted to undergo moisture and siloxane removal prior to being fed into the cogeneration engines. If the engines are out of service for maintenance, conditioned biogas can be routed to the boilers and excess biogas will be sent to the waste gas flare.

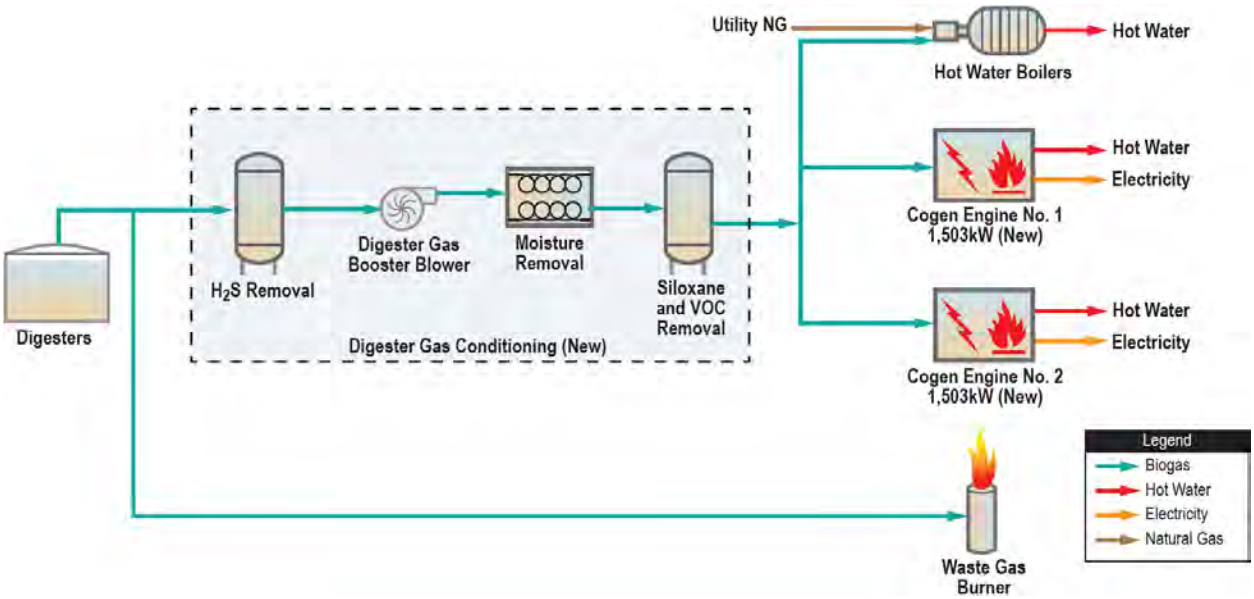

Figure 7 Pathway 1 (Cogen) Process Flow Diagram

4.3.1 Basis of Design

4.3.1.1 Cogeneration Technologies

The following cogeneration technologies were evaluated for incorporation into the NSWTP:

- Reciprocating engines.
- Microturbines.
- Gas turbines.

Reciprocating engines were recommended as the base case technology for this evaluation. These are the same type of engines that are currently in operation at the NSWTP and have been used in the industry for decades due to their compatibility with WRRF operations. Digester gas is combusted internally in these

engines and their pistons move up and down, spinning a crankshaft connected to an electric generator which produces electricity that can be used on site or delivered to the utility grid. Reciprocating engines are the most efficient cogeneration technology and offer over 40 percent electrical and 40 percent thermal efficiencies at the size ranges required at the NSWTP. New radiators will be required to waste unused heat from these higher efficiency engines, as MMSD's existing radiators were found to be undersized. These engines have overall efficiencies of approximately 85 percent. Their length varies from 20 to 25 feet, and they are about 7 feet wide.

Table 14 presents the biogas quality requirements for reciprocating engines.

Table 14 Biogas Quality Requirements for Reciprocating Engines

Parameter	Reciprocating Engine
Biogas pressure, psig	3-5
H_2S level, ppm	<50(1)
Siloxane level, ppbv	< 100
Relative humidity, percent	< 50

Notes:
psig - pounds per square inch gauge.
(1) <10 ppm H_2S levels required to extend siloxane media life.

Reciprocating engines are recommended for the Pathway 1 evaluation for the following reasons:

- Lowest capital cost and operating cost.
- Best fit equipment sizes available for range of biogas production expected.
- Operator familiarity.
- Availability of multiple manufacturers.
- Most common cogeneration technology at WRRFs in the United States.
- Highest electrical efficiency.
- Lowest biogas pressure.
- Reduced parasitic loads.

4.3.1.2 Biogas Conditioning

Biogas conditioning refers to the processes used to remove impurities from the raw biogas stream to increase equipment life and decrease maintenance requirements for downstream infrastructure. This process typically consists of treatment to remove H_2S, siloxanes, and moisture.

Hydrogen Sulfide Treatment

H_2S is a highly reduced compound that readily binds with most metals, is abundant in wastewater biogas and reacts with oxygen during combustion to create regulated air pollutants which can also corrode equipment. H_2S pretreatment is needed upstream of the engines to protect the equipment from corrosive wear. Additionally, very low H_2S levels are required at the inlet of the siloxane vessels to improve siloxane

media life. Several commercially viable options were considered for H_2S treatment, and media-based treatment was recommended along with the continuation of ferric chloride addition in the digesters:

1. **Media-based Treatment:** In media-based treatment, the H_2S is removed by adsorption onto the media from the gas stream as biogas flows through a vessel filled with media (iron hydroxide impregnated wood chips or other engineered media). At the flows and H_2S concentrations measured at the NSWTP, two H_2S removal vessels would be installed in series in a lead/lag configuration. Each vessel would have a media life of approximately 150 days. The first vessel will remove the majority of H_2S, while the second would act as a polishing vessel. Once the media is spent, the first vessel can be taken offline for media replacement and then put back online as the lag vessel.
2. **Ferric chloride addition:** MMSD currently adds ferric chloride to the anaerobic digesters to control H_2S concentrations in the raw biogas to approximately 400 ppm. It was assumed that the ferric chloride addition would be maintained at its current level, and an economic cost analysis of ferric chloride versus media treatment can be conducted as part of a future design effort.

Siloxanes and Volatile Organic Compound Removal

Siloxanes must be removed as part of the biogas conditioning process upstream of the cogeneration engines because, during combustion, they form silica deposits within the combustion chamber which can damage the equipment and reduce the effective heat transfer to the hot water system. The most common method of treatment is granular activated carbon (GAC) absorption vessels, which is assumed for this application. GAC absorbs the siloxanes and volatile organic compounds (VOCs) from the biogas and provides a backup/polishing step for H_2S removal. The installation would include two media vessels in series. Media life in the vessels would be approximately 360 days (combined) at the inlet siloxane and VOC design parameters, which is consistent with MMSD's current media changeout schedule.

Moisture Removal and Compression

Equipment provided for moisture removal would include a standalone chiller to condense the moisture and a variety of heat exchangers and knockout vessels to drain the liquid from the system within the biogas treatment skid.

Biogas conditioning systems are typically provided with a blower to convey the biogas through the required equipment. At the NSWTP flow rate, two blowers were recommended in a 1 + 1 standby configuration with 30 hp blower motors equipped with variable frequency drives (VFD) for biogas flow control.

4.3.1.3 Cogeneration Sizing Analysis

Carollo analyzed the biogas production projections with varying engine fuel input requirements and electrical efficiencies for both one and two engines operating. After inputting various engines' technical data, Carollo determined two 1.5 MW engines appear to best fit MMSD's application, which can consume up to approximately 700 scfm of biogas. Under this scenario two 1,503 kW 2G Energy engines at 43.4 percent electrical efficiency were considered and it was noted that the engines will run below full output under average conditions until approximately 2041, when there would be enough biogas produced to run the engines at 100-percent output.

To support increased capacity in the future as biogas production increases beyond 2050 levels, this analysis included adequate space in the cogeneration facility to replace the two 1.5 MW engines with two larger engines. Installing oversized engines from the start, though, would increase capital costs in the short term and increase O&M costs in the long run. Furthermore, it was unlikely that larger engines would run at their full output even during periods of higher gas production resulting in reduced or no additional power production over their lifetime, reducing engine efficiency and potentially expected equipment life.

Table 15 shows the design criteria for the cogeneration engines and biogas upgrading equipment. If desired by MMSD, engines can be supplied that have the ability to run without an external power source (i.e. island mode) to increase MMSD's resilience to the electricity grid.

Table 15 Pathway 1 (Cogen) Design Criteria

Cogeneration Design Parameters	Capacity
Engine electrical output, each, kW	1,503
Total combined output, kW	3,006
Biogas consumption at 100%-output, scfm	703
Fuel input to each engine, MMBH	11.8
Total combined fuel input, MMBH	23.6
Thermal output, each, MMBH	5.5
Total thermal combined output, MMBH	11.0
Electrical efficiency at full output, percent	43.4
Thermal efficiency at full output, percent	46.7
Basis of design make and model	2G Energy - Avus 1200e
Gas Conditioning System Parameters	
Design flow rate	740 scfm
H_2S Treatment	
Technology	Engineered iron-hydroxide media
H_2S vessel quantity	2 (lead/lag)
H_2S outlet concentration, ppm	<10
Projected media life, days	300
Boosting	
Technology	Centrifugal
Quantity	1 + 1 standby
Motor size (hp)	30
Discharge pressure requirement, psi	5
Moisture Removal	
Technology	Chilling and knockout vessel
VOC/Siloxane Removal	
Technology	Activated carbon media
Vessel quantity	2 (series)
Siloxane outlet concentration, ppbv	<100
Projected media life, days (total)	365

Notes:
(1) Discharge pressure requirement of 5 psi is based cogeneration engine manufacturer recommendation.

4.3.1.4 Cogeneration System Layout

Pathway 1 involved decommissioning the engine blower and simplifying biogas use by directing all biogas to two new cogeneration engines. These engines will be housed in a new 110-foot by 60-foot cogeneration building in the greenfield area east of the Struvite Harvesting Building—consistent with MMSD's Capital Project Infrastructure Placement Plan.

A new gas conditioning system would replace the existing system and would likely be co-located with the new engines. Based on conventional design practice and MMSD's experience with the existing system, it was decided that gas compression and moisture removal equipment will be located in a new building (versus outdoor as currently installed), while H_2S and siloxane/VOC removal vessels, glycol chiller, and oil cooler will be outside. A 25-foot by 60-foot concrete pad will support the new vessels, which will be located alongside the new building. Biogas will tie into existing piping near the sludge storage tanks and Digesters 1 and 2. New biogas piping would be sloped to condensate drains, and additional gas storage is not anticipated to be required. Existing cogeneration and conditioning equipment would be demolished while the pipe sizing and storage adequacy should be confirmed in the final design. The new biogas piping routed to the cogeneration system is recommended to be minimum 12-inch diameter. Figure 8 presents the proposed site layout for Pathway 1. It is noted that, under Pathway 1, both gas holder covers may need to be repaired. The existing gas holding covers are being evaluated within the ongoing Biosolids Facilities Plan.

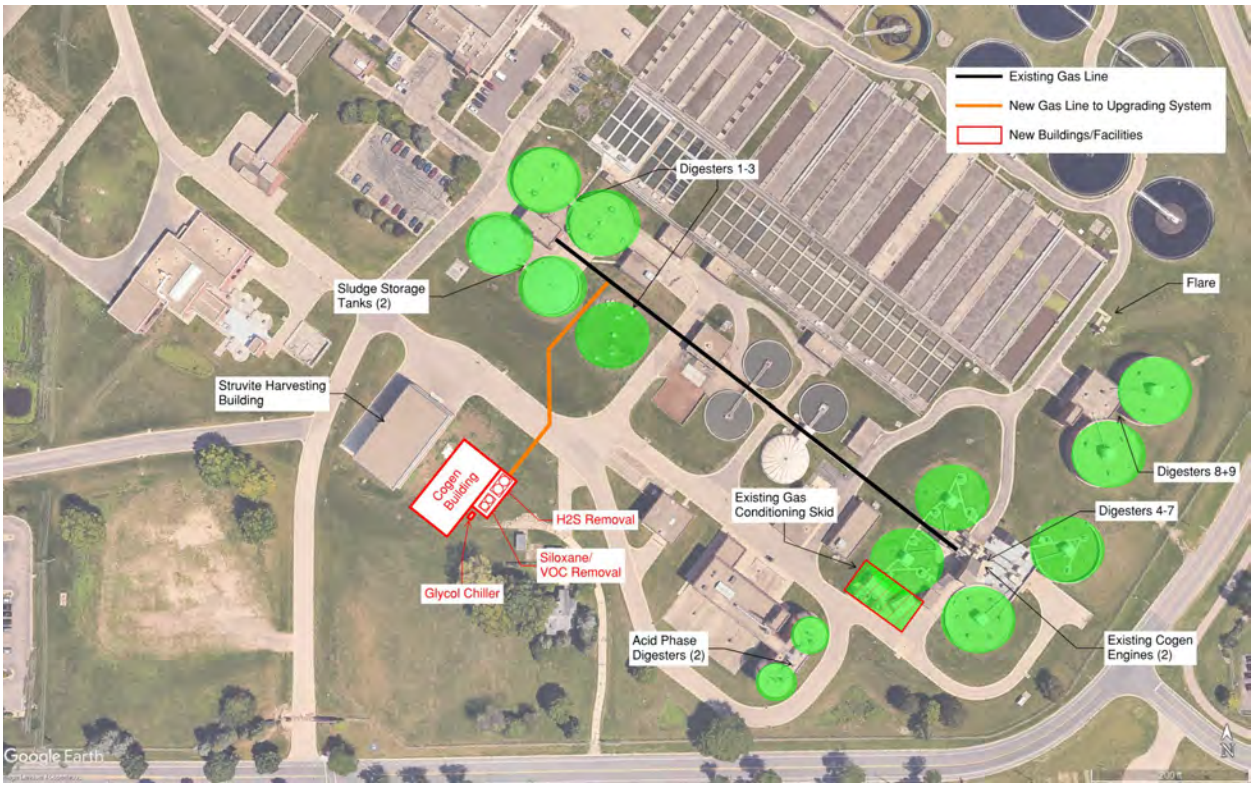

Figure 8 Pathway 1 (Cogen) Proposed Site Layout

4.3.1.5 Other Design Considerations

1. **Impact on Existing Thermal Energy Infrastructure:** The new cogeneration system could recover more heat compared to the existing cogeneration system, offsetting natural gas use in boilers. However, since the engines are connected to the hot water system and not the steam system, the system's heat recovery is limited during warmer months when building heating isn't needed. Therefore, the heat recovery from the cogeneration system will be limited during that time to the gas phase digesters' and struvite drying process' heat demand. All the cogeneration heat is expected to be recovered in the winter. If the steam boilers were converted to hot water, MMSD could save $5 to $7 million in natural gas over 20 years. Biogas can be routed to the steam boilers when the cogeneration system is offline. The new engines can provide up to 11 MMBH of heat, averaging 6.8 MMBH initially and increasing to an average of 7.3 MMBH at projected biogas flows.
2. **Electrical Improvements:** The team e-evaluated power supply and electrical connection for the generated electricity for relocating the cogeneration system east of the existing Struvite Harvesting building. The proposed cogeneration engines have an electrical parasitic load of approximately 70 kW and an electricity generation capacity of 3,006 kW with an additional gas conditioning system's parasitic electrical load of 70 kW. The existing 480-volt switchgear in the nearby unit substations (U1, U3, and U15) are not configured to connect the proposed engines; thus, 4,160-kilovolt medium-voltage engines were proposed. The plant's medium-voltage distribution system utilized dedicated feeders from the main switchgear (S1) to medium-voltage switchgear and unit substations around the plant. Because there is no nearby medium-voltage equipment to which the new reciprocating engine feeders can connect, the following are potential options to connect the reciprocating engines:
   a. Intercept the existing U1 feeders.
   b. Provide dedicated feeders from S1.

   Further evaluation of these alternatives to connect the new engines to the existing electrical system should be conducted in preliminary design.
3. **Air Permitting:** Pathway 1 would require a revision of the facility's air permit to remove the existing biogas-driven blower and reciprocating engines and add the new engines. The existing flare is required to combust the biogas when the engines are offline, hence, would remain on the permit. Boiler modifications would also need to be included in any revisions.
4. **Energy Impacts:** Replacement of the existing engine generators will result in increased electrical and thermal production due to the greater overall efficiency of modern cogeneration equipment compared with the existing cogeneration system. Under Pathway 1, the new cogeneration engines would generate an average of 60 percent of the electrical demand over the analysis period, almost double the existing engines' electricity production. Furthermore, the improved thermal efficiency of the engines would result in less natural gas use and less demand from the boiler systems. However, these benefits will be limited to the cold periods of the year when all produced heat can be utilized. Unless process upgrades are made to the acid phase digesters to convert the heating method from steam to hot water, more heat would be wasted in the summer over current levels.
5. **GHG Emissions:** Scope 2 emissions are expected to increase under Pathway 1 due to greater electricity demand from the new cogeneration system. Scope 1 emissions and the emissions resulting from biogas combustion are also expected to increase. However, the GHG calculation excludes biogenic CO_2, which is considered carbon neutral and is not considered for reporting requirements, therefore, the GHG intensity, or amount of GHGs released per unit energy or fuel consumed, for

biogas combustion is low, leading to a negligible impact on overall GHG emissions. The overall GHG footprint for Pathway 1 is expected to improve due to the improved electrical and thermal efficiency of the new engine generators compared with the existing. The impacts for Scope 2 GHG emissions from purchased electricity under Pathway 1 and the major GHG emissions and offsets related to the biogas system are summarized in TM 4.

4.3.2 Capital and Life Cycle Costs

Capital costs: The total project cost estimate calculated in 2025 dollars for Pathway 1 is approximately $27 million as shown in Table 16. This cost includes construction of a new cogeneration building, new biogas conditioning system, two 4,160-volt 1.5-MW cogeneration engines and associated cogeneration appurtenances, two hot water recovery pumps, along with piping, site/civil, mechanical, and electrical upgrades required for the project.

Table 16 Pathway 1 (Cogen) Estimated Project Cost

Description		Cost
Direct Costs (includes construction allowances)		$15,428,000
General Conditions Allowance	15%	$2,314,000
Contractor Overhead and Profit	20%	$3,086,000
Bonds and Insurance	3%	$463,000
Total Construction Cost		$21,291,000
Engineering Legal, and Administrative Fees	15%	$3,194,000
Construction Management	10%	$2,129,000
Total Project Cost Estimate (2025 dollars)		$26,614,000

O&M Cost and NPV: The cogeneration system O&M cost assumptions include the following:

- Natural gas cost for hot water and steam boilers used for digester heating.
- Cogeneration and conditioning system O&M.
- Engine generator rebuild cost.
- Biogas conditioning media replacement.
- Parasitic electrical loads.

The O&M costs also include costs for MMSD operations staff, regular activities such as oil changes, spark plugs, replacement of air filters, coolants, batteries, etc., and occasional maintenance required for the chillers, blowers, and heat exchangers associated with the system. This annual cost was calculated as 4 percent of equipment costs, which is comparable to the cost of a typical service contract.

The vast majority of biogas would be used for cogeneration, with natural gas used in the boilers to offset additional heat demand that is not met by the heat recovery of the cogeneration system. Additionally, natural gas is assumed to be used in the steam boilers under this pathway. Anticipated revenues for Pathway 1 include savings in electricity purchased due to the production of electricity from the cogeneration engines along with natural gas reduction savings.

The NPV for Pathway 1 evaluated the costs and utility cost offsets (electricity and natural gas) associated with cogeneration over the estimated 20-year life of the equipment from 2029 through 2048. For the

analysis, project cost was escalated to 2028 dollars to calculate the NPV of capital at the beginning of the 20-year cycle. Table 17 presents the NPV of capital and operating costs over a 20-year life.

Table 17 Pathway 1 (Cogen) Net Present Value

	Costs/(Revenues)
Estimated Project Cost (2028 dollars)	$29,507,000
Annual Costs(1)	$1,152,000
Natural Gas Cost for Hot Water Heat, $/year	$154,000
Natural Gas Cost for Steam Heat, $/year	$272,000
Cogeneration and Biogas Conditioning System O&M, $/year	$200,000
Engine Generator Rebuilds (annualized), $/year	$186,000
Biogas Conditioning Media Replacement, $/year	$340,000
Annual Revenues	
Power Savings, $/year	($3,370,000)
Net Annual Costs/(Revenues), $/year	($2,218,000)
Net Present Value ($)	($14,266,000)
Payback Period, years	13 years

Notes:
(1) Costs presented are average costs over the 20-year period from 2029 through 2048.
(2) Cogeneration revenue represented as electrical costs off-sets or saved electrical costs.

This alternative had a 20-year NPV of $14 million and translated to a payback of approximately 13 years.

Additionally, NPV was calculated for the following two separate scenarios under Pathway 1:

1. FOG Digestion: For this analysis, biogas production was increased by 144,000 cfd or 100 scfm to account for increased methane yields due to conversion of lipid-rich wastes into biogas. The payback stayed the same at 13 years with a 20-year NPV of $16 million.
2. Thermophilic Digestion: For this analysis, the biogas production was increased by 10 percent, and the hot water heat demand was increased by 40 percent to account for higher biogas yields due to operation at elevated temperatures (135°F). The payback for this scenario increased to 14 years with a 20-year NPV of $11.5 million.

Sensitivity Analysis: To evaluate financial viability based on changing future conditions, sensitivity analyses were developed for Pathway 1. Four scenarios were developed and each included the baseline capital costs. Specific operating costs or revenues were varied to evaluate the impact on the payback period and NPV (Table 18).

Table 18 Pathway 1 (Cogen) Sensitivity Analyses

Scenario	Condition	Payback	20-year NPV
Sale of RECs	REC revenue calculated. REC value of $3/MMBtu was used.	13 years	($16 million)
Increased Electrical Cost	Electricity cost increased by 10 percent.	11.5 years	($21 million)
Increased Natural Gas Cost	Natural gas cost increased by 10 percent.	13.5 years	($13.5 million)
Reduced Gas Conditioning Media Replacement Cost	Assumed reduced media replacement cost of $100,000/year.	12 years	($19 million)

4.4 Pathway 2 - RNG Evaluation

Pathway 2 included replacement of MMSD's engine generators with a biogas upgrading system to inject RNG into the natural gas pipeline. This required upgrading the biogas to remove siloxanes, H_2S, VOCs, CO_2, and moisture, and compressing the RNG for injection into the natural gas supply pipeline. An interconnect facility (designed and constructed by the natural gas utility) was also required. If the biogas upgrading system was out of service for maintenance, biogas would be routed to the dual fuel boilers and/or to the waste gas flare. Unlike Pathway 1, use of the treated biogas in the boilers for process heat was not considered in the RNG evaluation. Use of RNG in the boilers is possible, though due to the compressor's electrical demand and costs of treatment, this option is likely more expensive.

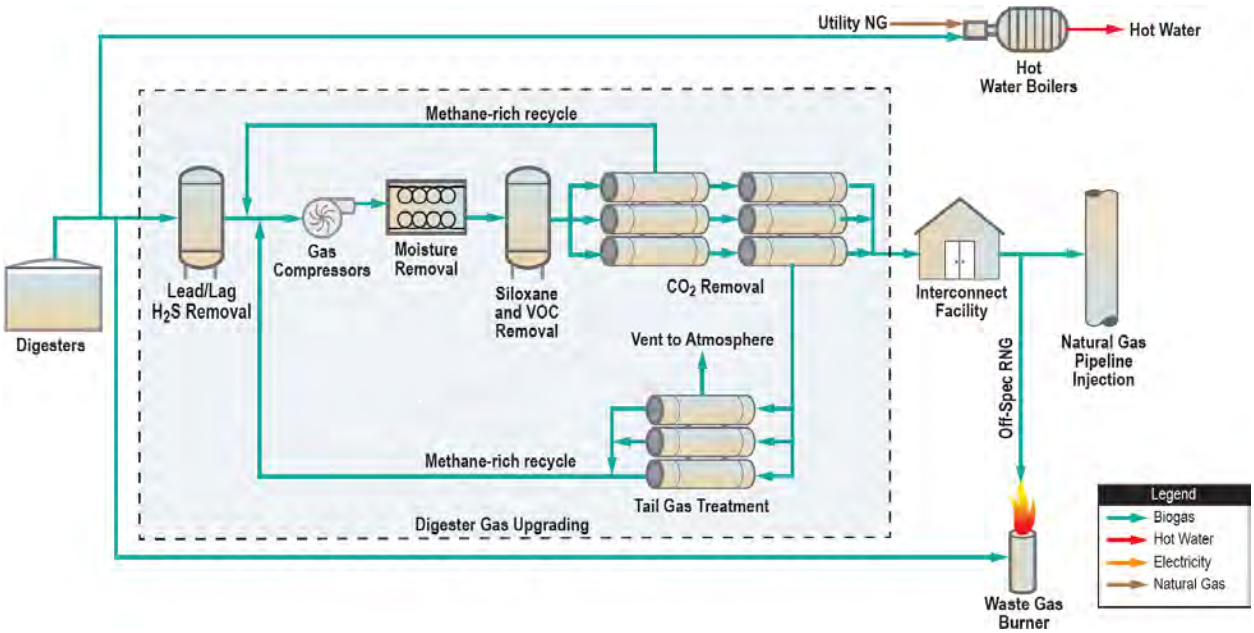

Figure 9 Pathway 2 (RNG) Process Flow Diagram

4.4.1 Renewable Natural Gas Interconnect

For participation in the RFS program, the produced RNG must be utilized as vehicle fuel (termed compressed natural gas [CNG] due to the high pressures required), which can be accomplished in two ways. The first is a direct to vehicle fueling station, which would require additional compression, storage, and fueling infrastructure. The second is pipeline injection, which consists of injecting the RNG into an existing natural gas pipeline where a third-party fueling station pulls natural gas from the pipeline, compresses it to CNG, and fuels vehicles similar to the first option.

Three RNG interconnect alternatives were considered, including:

- Madison Gas & Electric (MG&E).
- ANR Pipeline Company (ANR).
- Dane County Landfill.

MG&E and ANR are straightforward pipeline injection alternatives. Dane County Landfill would be a "virtual pipeline" consisting of filling a truck-mounted, high pressure storage vessel at the NSWTP,

trucking it to the county's landfill, and discharging through the landfill's existing injection station into ANR's pipeline.

MG&E is MMSD's natural gas provider and while MG&E does not currently have any RNG producers injecting into their system, they recently developed draft RNG standards. If approved, the new RNG tariffs would be effective in January 2026. Based on discussions with MG&E, the anticipated interconnect location would be into the 12-inch pipeline located directly west of the Nine Springs Substation and an RNG discharge pressure of 220 psig was recommended to provide sufficient pressure when the pipeline is operating at the maximum allowable operating pressure (MAOP). The required inlet pressure can be better-defined during a capital project to confirm that additional compression will not be required. MG&E estimated the cost for the interconnect facility and RNG pipeline to be $3 million +/- 15 percent. A value of $3.5 million was used in the evaluation.

Interconnection into MG&E's natural gas pipeline was assumed as the basis of this analysis due to the following reasons:

- Capital cost: MG&E's interconnection cost for the NSWTP's RNG production was significantly less costly than the standard ANR interconnect size and the distance to MG&E's existing natural gas pipeline was significantly shorter than required to connect to the existing ANR natural gas pipe.
- Operating cost: Less power was required for compressing to 220 psig for the MG&E pipeline compared to the 900 psig required for the ANR pipeline.
- Operational complexity: Coordination of multiple trucks in a virtual pipeline and injection at the Dane County interconnect facility posed more difficulty when compared to the straightforward pipeline injection.

4.4.2 Basis of Design

4.4.2.1 Biogas Upgrading technologies

Carollo developed the *Biogas Upgrading System Technology Review Project Memorandum* earlier in the project (included as an appendix to TM 4), comparing the options for biogas upgrading technologies and recommended a three-stage membrane system because these are widely used at WRRFs, are cost-effective at lower size ranges, and have simpler O&M compared to the other upgrading technologies.

Pretreatment

The H_2S removal processes are identical to the biogas conditioning and the same treatment as biogas conditioning was recommended, using two lead-lag vessels filled with an iron-based media. Siloxanes and VOCs are removed as part of the biogas upgrading process to meet the natural gas quality requirements and prevent membrane fouling. GAC is used for removal of both constituents, though the vessels are smaller as compared to biogas conditioning (because they operate at a higher pressure), are operated in series, and do not have a lead/lag design due to the complexities of piping with the number of vessels (typically 4 vessels are provided).

Membrane upgrading requires compression (two compressors were recommended at NSWTP's flow rate) to reach the operating pressure of the membranes and flow into the natural gas pipeline. Like the biogas

conditioning system, a moisture removal system including a chiller, heat exchangers, and moisture knockout vessels is required downstream of the compressors.

Membrane Upgrading

Membrane upgrading operates at pressures between 150 and 200 psig, depending on the specific membranes selected and downstream pipeline pressure requirements. For the MMSD analysis, biogas would be compressed to the range of 190 to 220 psig. The biogas is conveyed inside the tubular membrane tubes and smaller molecules (e.g., CO_2) flow through the membrane's pores, while the larger methane (CH_4) molecules are retained inside the membrane.

A two-stage membrane system, with the membranes operating in series, could achieve 95 percent CH_4 recovery while a three-stage membrane system, where the tail gas from the first stage membrane can be routed through a third membrane, could achieve up to 99 percent CH_4 recovery. A three-stage membrane system was assumed for this evaluation. The typical footprint of gas conditioning and a three-pass membrane system is 50-feet by 50-feet and it was recommended to locate this facility as close as possible to the anaerobic digesters to avoid long runs of raw biogas piping. Raw biogas contains moisture and must be sloped to condensate drains. The facility typically consists of gas conditioning vessels located outdoors and the compressor and membranes located within an enclosure or building.

4.4.2.2 Biogas Upgrading Sizing

Biogas upgrading equipment is sized based on the raw biogas flow rate, with considerations for future service area growth or intake of new digester feedstock to accommodate higher biogas flow rates. TM 2 calculated a future average daily gas production of 1,102,000 scfd, which equates to 765 scfm. The biogas upgrading system was sized to capture all the biogas production to maximize the revenue from pipeline injection. To align with general sizes provided by manufacturers and to capture peaks in biogas production, the biogas upgrading equipment was sized for 800 scfm of raw biogas flow. Biogas upgrading systems are generally capable of turndown to 30 percent of listed capacity which allows the upgrading system to treat a wide range of gas flows over the life of the system. Vessels and piping can be sized for larger flows without significant capital cost increases, and compressors can be supplemented with an additional unit. Empty or partially filled membrane racks can be installed for a relatively small capital cost increase at the beginning of the project. Further evaluation of system sizing is recommended as part of the design effort.

Table 19 shows the design criteria of the biogas upgrading equipment. The entire system should be designed in accordance with the National Fire Protection Association (NFPA) 820 "Standard for Fire Protection in Wastewater Treatment and Collection Facilities", which requires explosion-proof electrical classification of hazardous areas.

Table 19 Pathway 2 (RNG) Design Criteria

Upgrading System Parameters	Value
Design Flow Rate (scfm)	800
H_2S Treatment	
Technology	Engineered iron-hydroxide media
H_2S vessel quantity	2 (lead/lag)
Outlet concentration, ppm	<4
Projected media life, days (per vessel)	135
Compression	
Technology	Oil-flooded screw compressor
Quantity	2
Motor size (hp)	300
Discharge Pressure, psi	190(1)
Moisture Removal	
Technology	Chilling and knockout vessel
VOC/Siloxane Removal	
Technology	Activated carbon media
Vessel quantity	4 (series)
Siloxane outlet concentration, ppmv	<1 ppmv (total)
Projected media life, days (total)	180
Methane Separation	
Technology	Membranes
Treatment stages	3 (2 process, 1 recycle stream)
RNG flow rate, scfm	509
Tail gas flow rate, scfm	290
Methane recovery, %	99.5

Notes:
ppmv - parts per million by volume.
(1) 190 psig is the assumed typical discharge pressure. When the natural gas pipeline is operating at higher pressures closer to the 175 psig MAOP, the equipment can achieve 220 psig, the maximum required to flow through the MG&E interconnect.

4.4.2.3 Biogas Upgrading Layout

The biogas upgrading system will be housed in a 50-foot by 50-foot building for freeze protection and ease of operations and maintenance. A 50-foot by 25-foot outdoor concrete pad will hold the H_2S and siloxane/VOC treatment vessels, with the glycol chiller and oil cooler located outdoors to discharge heat for the cooling processes. Similar to Pathway 1, Pathway 2 proposed placing the system in the greenfield area east of the Struvite Harvesting Building. The new system would tie into the existing biogas distribution piping immediately downstream of the sludge storage tanks and Digesters 1 and 2, conveying raw biogas to the new gas upgrading skid. The new biogas piping routed to the upgrading system is recommended to be minimum 12-inch diameter. Upgraded RNG will then flow to an interconnect facility located adjacent to the upgrading system. The interconnect facility and RNG piping will be designed and

installed by MG&E and will need to be located on an easement on MMSD's property. RNG that does not meet MG&E's quality requirements (off-spec gas) will be routed by new piping to the waste gas flare via the existing biogas pipe galleries and tunnels. A proposed layout of the biogas upgrading system on the NSWTP plant site and RNG pipeline pathway is shown in Figure 10.

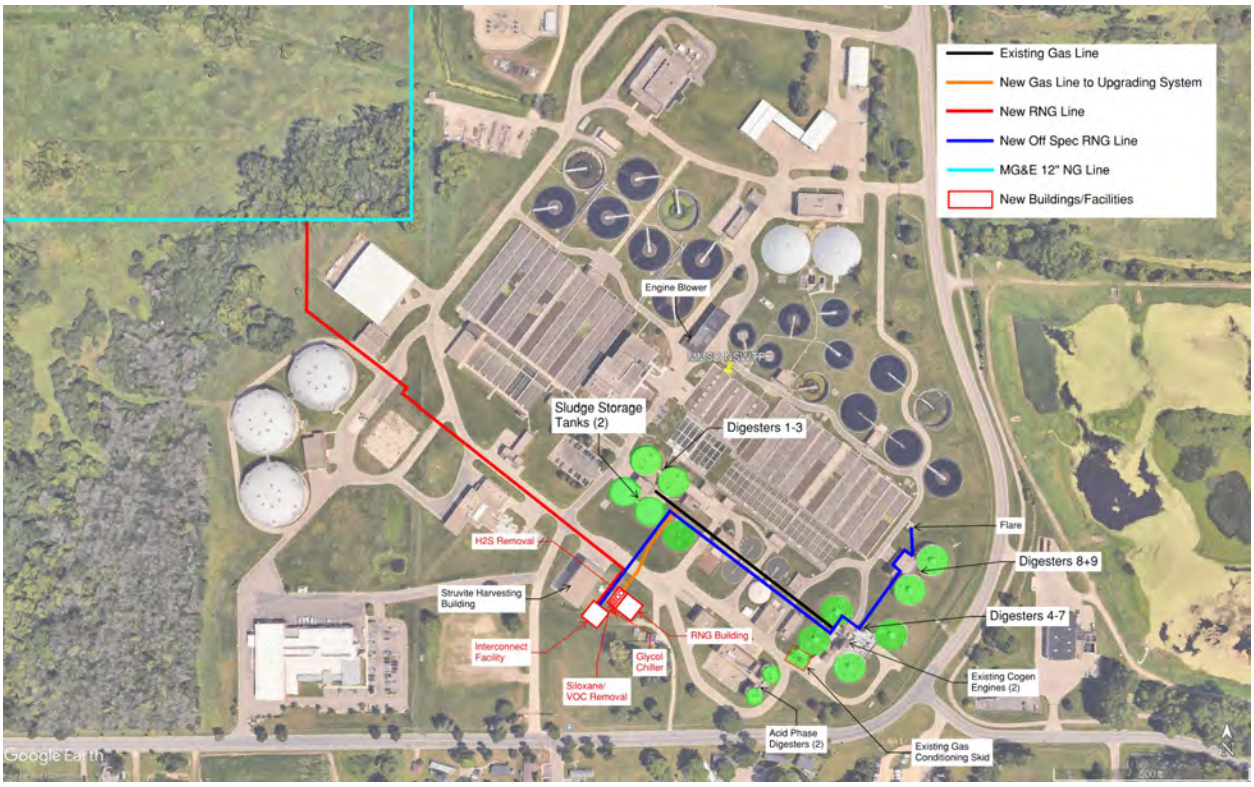

Figure 10 Pathway 2 (RNG) Proposed Site Layout and RNG Piping to Injection Point

4.4.2.4 Other Design Considerations

1. **Impact to Existing Thermal Energy Infrastructure:** The removal of the cogeneration systems and engine driven blower would require that all process and building heat be provided by plant boilers or other systems. Alternatives for providing the required heat are evaluated in Section 5.
2. **Electrical Improvements:** Pathway 2 has a higher electrical load compared to Pathway 1, which needs to be considered when evaluating the electrical infrastructure. When the natural gas pipeline operates at its MAOP, the electrical load is estimated to be 500 kW. The RNG system would be fed from a new circuit breaker in the 480-volt U1 switchgear if capacity is available and if not available, capacity on other nearby substations (U3 or U15) or upgrades to increase capacity on U1 (such as replacing the transformers) would need to be reviewed. Substation U1 was installed in 1995. The typical useful life of the electrical equipment is 30-35 years and replacing or upgrading the equipment should be considered.
3. **Air Permitting Impacts:** Pathway 2 requires maintaining the existing waste gas flare on the air permit, as it would be required to combust the biogas when the biogas upgrading system is offline for maintenance. The air permit would need modification to remove the existing combined heat and power (CHP) engines and biogas-driven blower and add a new emission source for the tail gas. If

required by the local air emissions agency, the tail gas can be treated using a regenerative thermal oxidizer before being discharged to atmosphere to combust trace methane into CO_2.

4. **Energy Impacts:** Under Pathway 2, all biogas is upgraded to RNG for pipeline injection and none of the gas is used on site for electricity production or heating. As a result, MMSD would need to purchase significantly more electricity and natural gas to meet all energy needs. At the time of this report, about 31 percent of electricity and over 85 percent of the hot water demand are met with biogas at MMSD. Pathway 2 would eliminate this benefit, increasing reliance on purchased electricity and natural gas.
5. **GHG Emissions:** The GHG footprint under Pathway 2 is expected to increase GHG emissions, in part, due to the considerable increase in purchased electricity to make up for the lost on-site electricity generation from the cogeneration engines. Since all biogas is upgraded for RNG injection, the resulting increase in natural gas consumption for heating is expected to substantially increase Scope 1 and overall emissions. TM 4 summarizes the major GHG emissions and offsets related to the biogas system for Pathway 2. The system boundaries for the GHG analysis extend beyond the plant to include off-site combustion, capturing both the GHG offset and added emissions from the beneficial use of RNG. The GHG benefit, though, far outweighs any additional combustion emissions. The production of RNG to offset vehicle fuel (through injection into the pipeline) is expected to fully offset GHG emissions.

4.4.3 Capital and Life Cycle Costs

Capital Costs: The total project capital cost estimate (2025 dollars) for Pathway 2 is approximately $26 million, as shown in Table 20. This cost includes a biogas upgrading system located in a building, related sitework and its enclosure, a gas chromatograph, and various allowances for structural, mechanical, electrical, and instrumentation and controls.

Table 20 Pathway 2 (RNG) Estimated Project Cost

Description		Cost
Direct Costs (includes construction allowances)		$12,795,000
General Conditions Allowance	15%	$1,919,000
Contractor Overhead and Profit	20%	$2,559,000
Bonds and Insurance	3%	$384,000
Total Construction Cost		$17,657,000
Engineering Legal, and Administrative Fees	15%	$2,649,000
Construction Management	10%	$1,766,000
MG&E Interconnect Facility		$3,500,000
Total Project Cost Estimate (2025 dollars)		$25,572,000

It should be noted that biogas upgrading equipment generally cannot be Build America, Buy America (BABA) compliant on a system level because BABA compliant components are not commercially available. Instead, the manufacturer can provide documentation to support a waiver application, which has been successful on other projects.

O&M Cost and NPV: Pathway 2 O&M costs included the following:

- Natural gas cost for hot water and steam boilers used for digester heating.
- Biogas upgrading system O&M.
- Media replacement costs.
- Electricity cost.
- Annual reporting fees and certification.

O&M costs for the biogas upgrading system include a variety of tasks that would be performed by MMSD staff, including replacement of air filters, coolant, etc., instrument calibration and maintenance, and maintenance of major mechanical components.

Annual revenues for Pathway 2 included RIN revenue through the RFS program and the sale of brown gas. RIN revenues were based on the average price for the last ten years to capture changes in market value.

Similar to Pathway 1, Carollo developed the NPV for Pathway 2 over the projected life of the equipment, assumed to be 20 years, using the projected capital cost, O&M costs, and anticipated revenues. Life cycle cost is expressed as a NPV showing the value of the overall project in 2028 dollars. A summary table presenting the NPV is shown in Table 21.

Table 21 Pathway 2 (RNG) Net Present Value

Criteria	Costs/(Revenues)
Estimated Project Capital Cost (2028 dollars)	$28,352,000
Annual Costs	$1,924,000
Natural Gas Cost for hot water heat, $/year	$561,000
Natural Gas Cost for steam heat, $/year	$272,000
Annual System Operation, $/year	$101,000
Media Replacement Cost, $/year	$397,000
Electricity Cost, $/year	$469,000
Annual Reporting Fees and Certification, $/year	$124,000
Annual Revenues	($6,419,000)
Natural Gas Sale to Pipeline, $/year	($254,000)
D3 (Cellulosic) RIN Revenue, $/year(1)	($6,165,000)
Net Annual Costs/(Revenues), $/year	($4,495,000)
Net Present Value ($)	($59,458,000)
Payback Period, years	6 years

Notes:
(1) Revenues are based on average D3 RIN value of $2.20/RIN and brokerage fees of 15 percent of RIN revenues.

This alternative had a 20-year NPV of $59.5 million and a direct payback of approximately 6 years.

Consistent with the approach used in Pathway 1, the NPV was evaluated for two separate scenarios under Pathway 2 to account for varying biogas conditions:

1. FOG Digestion: For this analysis, biogas production was increased by 144,000 cfd or 100 scfm and the payback was reduced to 5 years with a 20-year NPV of $76 million.

2. Thermophilic Digestion: For this analysis, the biogas production was increased by 10 percent, and the hot water heat demand was increased by 40 percent. The payback for this scenario stayed the same as 6 years with a 20-year NPV of $67 million.

Sensitivity Analysis:

Sensitivity analyses with four scenarios were developed for Pathway 2 as summarized in Table 22.

Table 22 Pathway 2 (RNG) Sensitivity Analysis

Scenario	Condition	Payback	20-year NPV
Sale of RNG on Voluntary Market	RIN revenue was calculated assuming voluntary market revenue of $15/MMBtu.	15 years	($9 million)
Increased Electrical Cost	Electricity cost increased by 10 percent.	6 years	($58.5 million)
Increased Natural Gas Cost	Natural gas cost increased by 10 percent.	6 years	($58 million)
Reduced Gas Conditioning Media Replacement Cost	Assumed reduced media replacement cost of $100,000/year.	6 years	($65 million)

4.5 Biogas Evaluation Summary

A comparison of the 20-year NPVs of the Null Pathway, Pathway 1, and Pathway 2 is presented in Figure 11. Pathway 2 (RNG) steadily increases through the years with the project costs recovering in about 6 years and reaching a 20-year NPV (i.e. revenue) of nearly $60 million. This indicates that long-term operation significantly increases revenue generation. In comparison, Pathway 1 (Cogeneration) requires around 13 years to recover project costs and achieves a 20-year NPV of $15 million. Table 23 presents a high-level qualitative summary of how each pathway meets the criteria. Refer to Section 6 for the overall scoring of each biogas alternative in combination with the respective heating system alternatives.

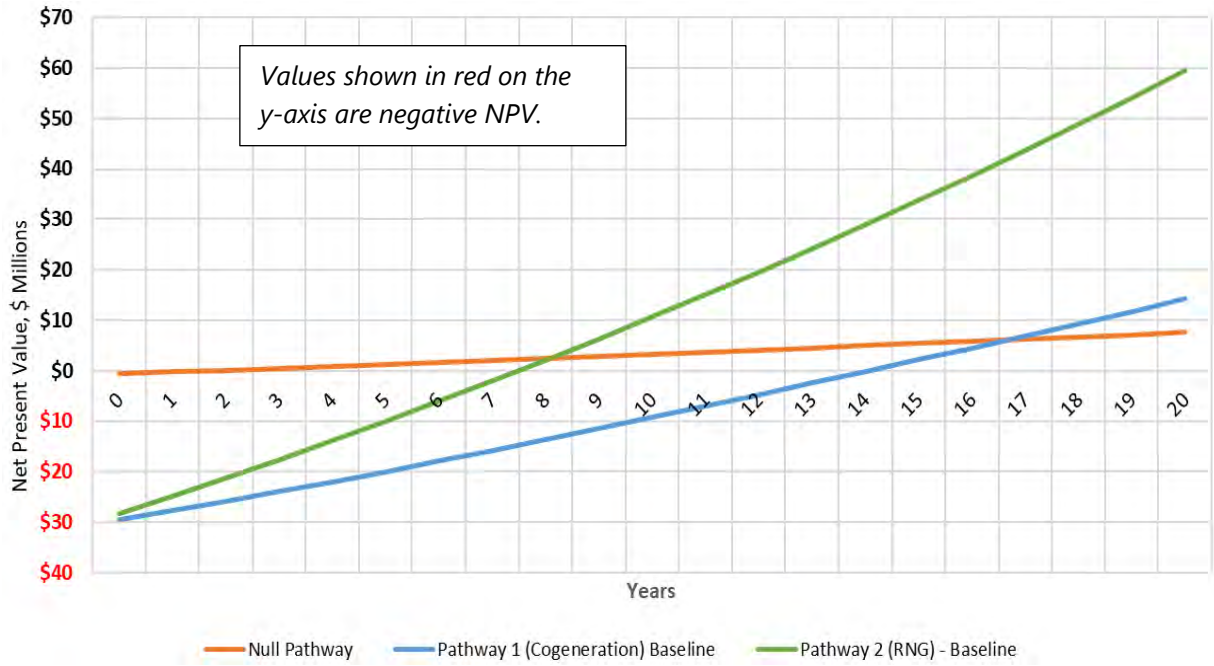

Figure 11 Comparison of Net Present Values

Table 23 Review of Pathways 1 (Cogen) and 2 (RNG) Based on Decision Criteria

Category	Criteria	Pathway 1: Cogen	Pathway 2: RNG
Financial	Capital Costs	Similar capital cost to Pathway 2.	Similar capital cost to Pathway 1.
	Life Cycle Costs	Positive revenue is realized after approximately 13 years of operation. Overall, 20-year revenue is lower than Pathway 2 but has a NPV of approximately $14 million. Based on the sensitivity evaluations, the payback for Pathway 1 ranges from 11 to 14 years.	Higher revenue projection over 20 years, with estimated payback of 6 years and 20-year NPV of approximately $59.5 million. Based on the sensitivity evaluations, the payback for Pathway 2 ranges from 6 to 15 years.
O&M	Operational Complexity/Difficulty	MMSD is familiar with gas conditioning equipment and cogeneration engines. However, Pathway 1 has more operational complexity as compared to a biogas upgrading system.	MMSD is unfamiliar with overall system, however individual components are similar to existing gas conditioning system and membranes do not require significant operator attention.
	Operational Response/Risk/Uptime	Reliable technologies that are familiar to MMSD. Downtime required for media replacement. Proper maintenance and on-site spare parts storage required to maintain up-time. Requires operator attention when errors occur.	Treatment is proven and is anticipated to meet MG&E requirements consistently. Downtime required for media replacement. Complex system comprised of multiple sub-systems with extensive instruments and controls. With proper maintenance and on-site spare parts storage, uptime of 95 percent is possible. Requires operator attention when errors occur.
Implementation	Future Site Flexibility	Proposed locations do not impact MMSD's future expansion of process-related or other infrastructure.	Proposed locations do not impact MMSD's future expansion of process related or other infrastructure.
Other	Market Risk	Minimal market risk as baseline Pathway 1 revenue is based on offset of electricity costs.	Financial feasibility is based on EPA's RFS program, which has been resilient to changes in political administrations to this point and has broad support. However, this program is not guaranteed, and RIN values have experienced significant fluctuations historically. Voluntary market can provide additional security with long-term contracts.
	Energy Recovery	Capable of 42 percent electrical and 40 to 45 percent thermal efficiency; combined efficiency of approximately 85 percent recovery of the biogas energy.	Capable of 99.5 percent recovery of the biogas energy.
	Outside Dependence	When cogens are on-line, provides 60 percent of electricity utilized on-site and 50 percent of heat required for process and building needs.	Requires outside partnerships for pipeline injection and external energy for process heat, supplied by natural gas. Cannot produce electricity to be used on site.

SECTION 5 PLANT WIDE HEATING SYSTEM EVALUATION

This section documents the plantwide hot water heating systems and compares the evaluation of the following pathways and sub alternatives at NSWTP: Null, Pathway 1 (Cogeneration) - Centralized and Decentralized heating alternatives, Pathway 2 (RNG) - Centralized and Decentralized heating alternatives.

5.1 Existing Hot Water Heating System

There are 30 buildings on the NSWTP site connected to the east, west, or central hot water loops (Figure 12). The remaining buildings either do not have any dedicated heating or are served with local natural gas unit heaters. The west and central loops are served by hot water pumps in the Boiler Building, and the east loop is served by pumps in SCB2. The west and central loops are connected to the east loop through 4-inch supply and return piping located in the Solids Gallery. A single pump in SCB2 can circulate water between the east loop and the west/central loops; however, under normal conditions minimal hot water is transferred between the loops. This 4-inch piping is not sufficiently sized to transfer enough hot water to supply the west/central hot water loops without supplemental heat being provided by the West Boilers located in the Boiler Building. The north loop is not connected to the east, west, or central loops and is not included in the following discussion.

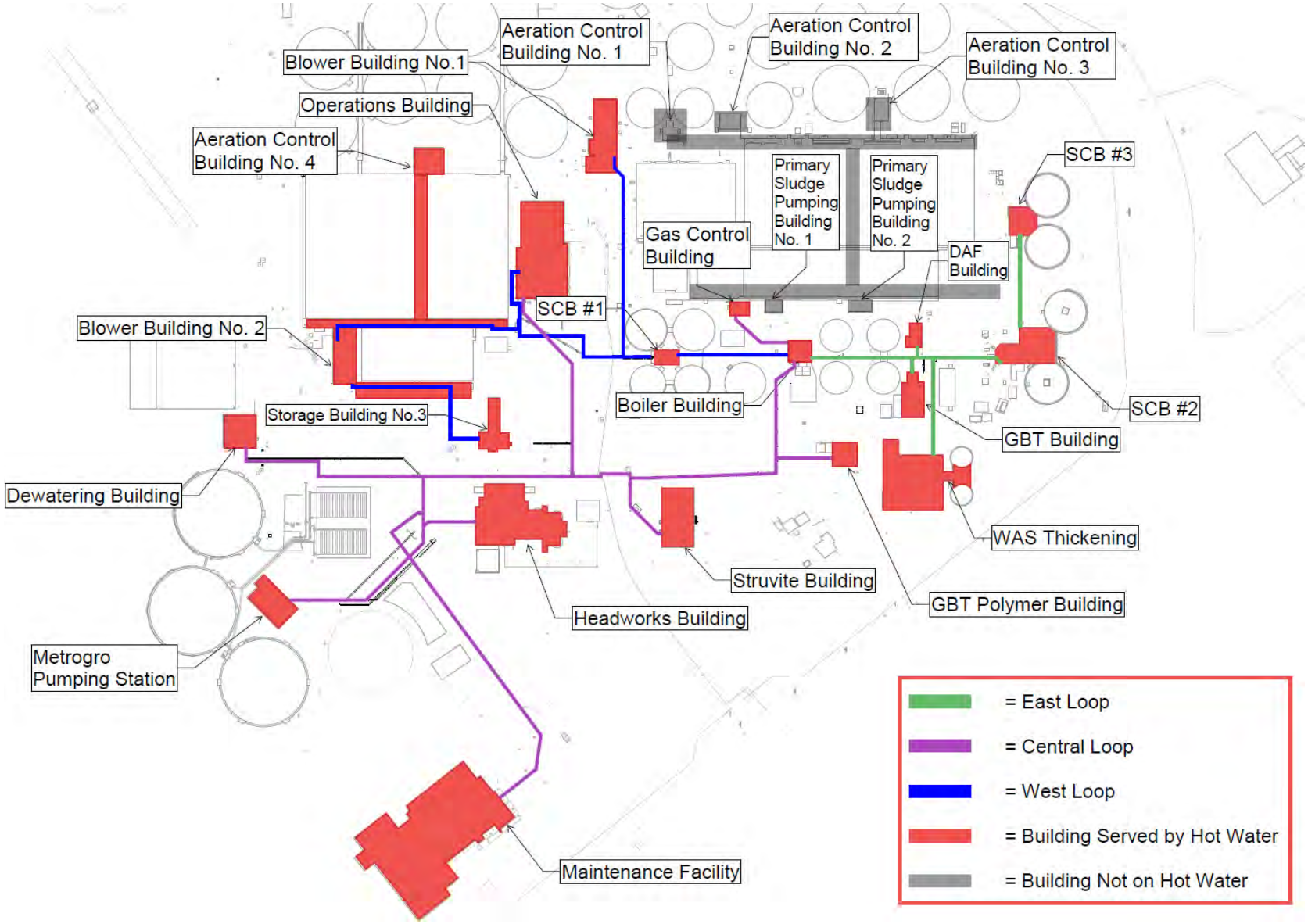

Figure 12 Existing Site Heating Hot Water Piping Map

5.1.1 Existing Hot Water Generation

The existing heat generating equipment is listed along with their locations at the NSWTP:

- The West Boilers (Boiler Building).
- The East Boilers (SCB2).
- The engine blower heat exchangers (Blower Building No.1).
- The engine generator heat exchangers (SCB2).

See Table 24 for the design capacities of the existing hot water generating equipment and which loop they serve.

Table 24 Existing Hot Water Generation Design Output Capacities

Location	Current Hot Water Loop	Equipment	Heat Generation Output Capacity (MBH)
East Blower Building (Blower Building No.1)	West Loop	Existing Engine Heat Recovery	2,000
Boiler Building	West and Central Loops	Existing West Boilers 1, 2 and 3	4,180 each
SCB2	East Loop	Existing East Boilers 4, 5 and 6	8,220 each
SCB2	East Loop	Existing Cogeneration 1 and 2 Heat Exchangers	2,000 each
		West and Central Loop Total	14,540
		East Loop Total	28,660
		Cumulative Total	43,200

Notes:
MBH - thousand British thermal units per hour.

The Boiler Building (West Boilers) and SCB2 (East Boilers) each have a control system that monitors the supply water temperature for their respective areas, and each control system stages and modulates the associated boilers to reach a desired supply water temperature. The Boiler Building and SCB2 control systems operate independent of one another and do not communicate or share data.

The existing cogeneration heat exchangers (SCB2) are connected to the east loop and utilize thermostatic valves to supply hot water at an outlet temperature setpoint. These valves are self-contained valves that are not controlled by a control system.

5.1.2 Existing Hot Water Demands

See Table 25 for the estimated current peak heat demand connected to the hot water loops. These demands are a summary of design information obtained from existing drawings and field equipment nameplate information. The values provided for heat demands assume the equipment is operating at peak design capacity.

Table 25 Estimated Current Peak Heat Demand by Building

Current Hot Water Loop	Building Demand (MBH)(1)	Process Demand (MBH)	Total Demand (MBH)
West and Central Loop Total:	16,480	1,310	17,790
East Loop Total:	14,310	1,370	15,680
Cumulative Total:	30,790	2,680	33,470

Notes:
(1) The building demand totals were revised from TM-2 based on updated calculations.

5.1.3 Summary of Deficiencies

As highlighted in Section 3, there are a number of deficiencies that were identified with the plant wide heating system. The following is a more detailed summary of deficiencies identified:

1. There is no centralized hot water control system to stage, sequence, and modulate the heat generating equipment and end use equipment. This lack of centralized control results in issues with maintaining temperature in the hot water loops. The system requires extensive operator knowledge for efficient operation, maintenance, and troubleshooting.
2. Piping and pumping infrastructure issues such as large pressure drop in the existing buried piping, undersized hot water distribution pumps, lack of modulating hot water control valves, and low gas pressure availability at the West Boilers results in issues maintaining temperature in the hot water loops:
    a. For example, typical hot water supply temperatures are in the range of 200-205°F). At times during winter operations, it has been observed by MMSD that the west/central hot water loop temperature drops to an unacceptable temperature (<195°F). This most commonly occurs when multiple boilers are called to run, natural gas is supplementing the system through the gas blending system, and there is a high heat demand on the west/central loop. In most instances, when the hot water loop temperature drops to an unacceptable temperature, the struvite drying process is also operating. Currently, to address the low hot water loop temperature MMSD shuts down the struvite drying process. This issue is likely the result of many factors, including low gas supply, governed gas treatment (maximum of 38,000 cubic feet per hour of biogas through the treatment skid), and high demands on the hot water system caused by both struvite drying and all other demands calling for heat on the west/central loop.
3. The current piping and pumping arrangements are not sufficiently sized to transport the flow of water between the west/central hot water loop and the east hot water loop. For this reason, the west/central and east hot water loops operate mostly independently of one another.

5.2 Null Pathway

The Null Pathway anticipates no major changes to the existing hot water infrastructure other than the replacement of major thermal equipment that is at the end of its useful life. The West Boilers are 45+ years old, and it was decided that these boilers will be removed and replaced in all future scenarios. The Null Pathway assumes the three East Boilers and two existing engine generators in SCB2 and the engine blower will remain. It is assumed the existing distribution pumps for all hot water loops will remain and would be replaced in-kind as needed in the future. The Null Pathway assumes all the buildings currently served by the hot water loops will remain as they are currently connected. The Null Pathway also assumes none of the existing hot water control, operational, or other deficiencies will be addressed.

5.2.1 Summary of Hot Water Heating System

The Null Pathway heat generating equipment includes the existing East Boilers, existing engine generator heat recovery, new West Boilers, and existing engine blower heat recovery. See Table 24 for the design capacities of the hot water generating equipment and which loop they serve.

The estimated demands in Table 26 include the same buildings as noted in Table 25, but the totals have been adjusted to reflect the increase in demands associated with the future ventilation modifications established in the 2021 Facility HVAC Study.

Table 26 Estimated Future Peak Heat Demand by Hot Water Loop - Null Pathway

Hot Water Loop	Building Demand (MBH)	Process Demand (MBH)	Total Demand (MBH)	Heat Generation Capacity Sufficient to Meet Demand? (Yes/No)
West and Central Loop Total	17,410	1,310	18,720	No
East Loop Total	15,950	1,370	17,320	Yes
Cumulative Total	33,360	2,680	36,040	--

The future process loads are the same as the existing process loads in Table 25. This is because the values presented are peak process loads. While the total amount of hot water required will increase over time, the peak quantity of heat required for the digestion process should remain relatively constant. Based on the totals in Table 26 and the current flow arrangement shown in Figure 13, there is sufficient generation capacity serving the east loop to meet the future demands, but there is not sufficient generation capacity serving the west and central loops to meet the future demands. The Null Pathway does not address any of the system deficiencies noted previously. Therefore, this pathway cannot meet future demands without including relatively significant upgrades to the hot water infrastructure and controls.

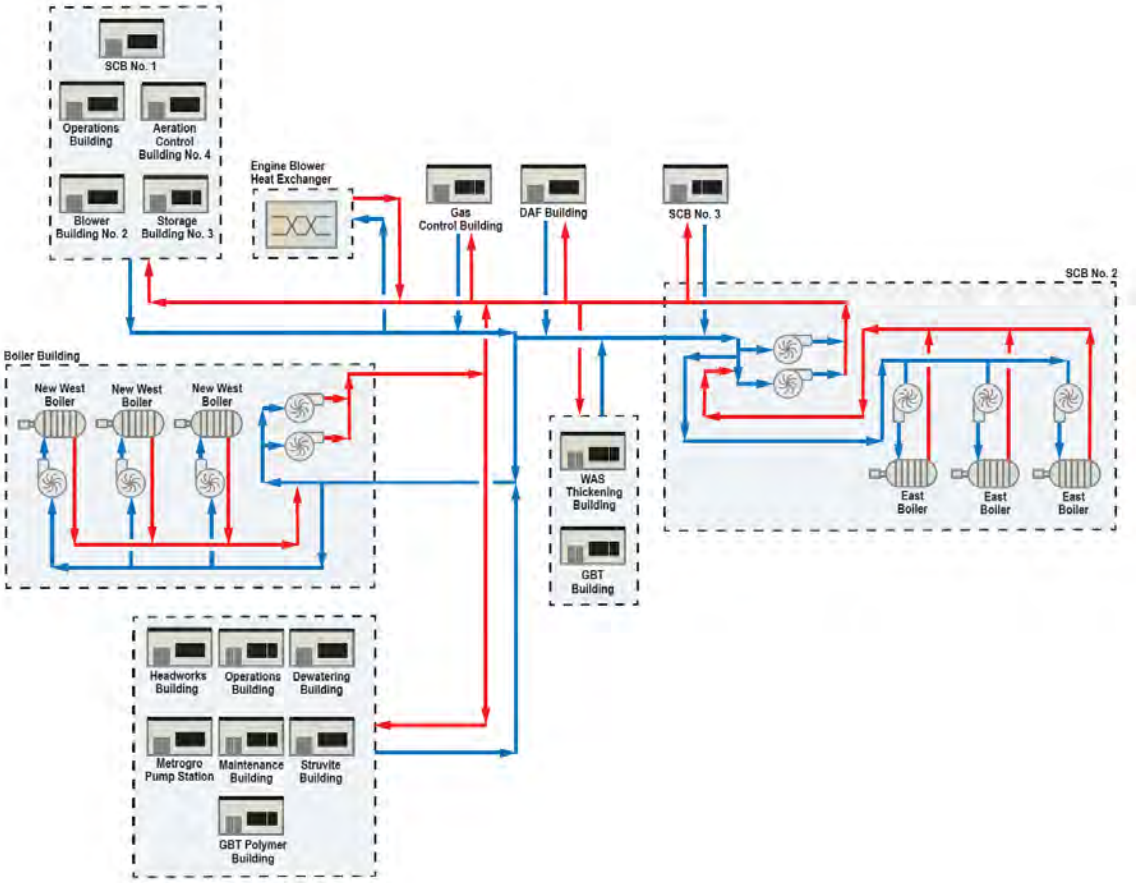

Figure 13 Current Hot Water Schematic - Null Pathway

5.2.2 Summary of Infrastructure Modifications

If the Null Pathway was selected, several design items would need to be addressed in detailed design. The infrastructure modifications associated with the Null Pathway include:

- Three new West Boilers and associated hot water piping, gas piping, valving, accessories, and power and controls.
- New hot water pumps associated with the new West Boilers.
- The new boilers will be installed in the existing Boiler Building. The existing Boiler Building will require modifications to accommodate the new equipment.

The calculated NPV for the Null Pathway includes life cycle costs associated with the hot water system over the estimated 20-year life of the equipment from 2029 through 2048. The estimated project cost was escalated to 2028 dollars, and the average O&M costs were used to calculate the NPV over the 20-year period (Table 27). Assumptions used for the analysis are summarized in Section 1.2.1 Capital and Life Cycle Cost Assumptions. The detailed NPV calculations are provided in Appendix E.

Table 27 Null Pathway Net Present Value

Description	Null Pathway Costs
Estimated Project Cost (2028 dollars)	$3,614,000
Annual Costs	
Natural Gas Cost Hot Water System, ($/yr)	$406,000
Electrical Cost, ($/yr)	$24,000
Heating Hot Water System O&M Cost, ($/yr)	$34,000
Net Annual Costs/(Revenues), ($/yr)	$464,000
Net Present Value ($)	$12,907,000

Notes:
$/yr - cost per year.

5.3 Pathway 1 - Cogeneration Evaluation

Pathway 1 - Cogeneration assumes all of the digester gas produced on site is utilized in two new centralized cogeneration engines for production of electricity and heat, with hot water boilers providing supplemental heat when needed. Within Pathway 1, there are centralized and decentralized heating alternatives. The centralized alternative utilizes hot water as the heat source for all buildings currently served with hot water. For the decentralized alternative, the buildings served with hot water from the cogeneration heat recovery and boilers would be limited to the buildings that are central to the plant and easily served with hot water. Buildings without hot water process heat demands were reviewed to determine whether the building should remain on the hot water system or be served with an alternative heat source, such as gas-fired or electrically heated equipment. It was decided in Workshops 5 and 7 that the buildings currently served by the north hot water loop, other than the Effluent Building, would not be considered in this Facilities Plan. The north loop hot water piping has previously failed in some locations and there are plans to remove many of the buildings in the future. Any future failures of the north loop hot water system infrastructure should be repaired or replaced to keep the loop operational until the buildings can be removed or abandoned.

5.3.1 Pathway 1 Cogeneration with Centralized Heating System Alternative

The centralized heating alternative assumes hot water will be the heat source for all process and HVAC heating demands within the noted buildings indicated in Figure 14. Buildings that are currently not heated or have electric heat, which are planned to be added to the hot water heating systems, are also identified in Figure 14. The 2021 Facility HVAC study recommended adding ventilation or ventilation modifications to some of these buildings. These modifications may not be added to the hot water system in the near future, but the hot water system should be sized to accommodate these potential additional heat demands in the future.

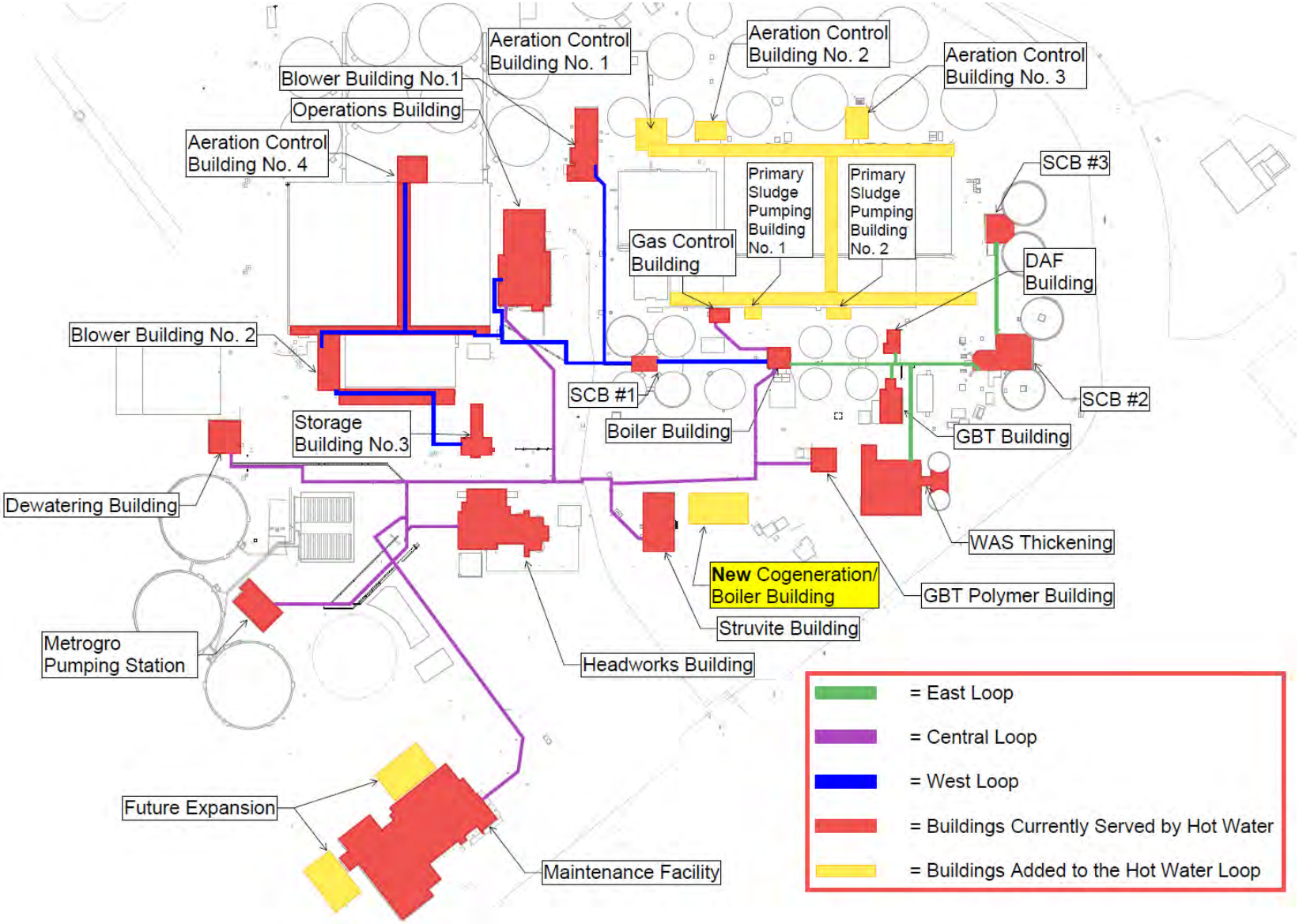

Figure 14 Pathway 1 Centralized Alternative Building Heat Source Map

5.3.1.1 Summary of Hot Water Demands

The future heating demands and heat generation for the Centralized Heating Alternative were reviewed in TM 5 which can be found in Appendix E. A detailed breakdown of the building demands and generation is included in TM 5, and a summary is presented in Table 28 below.

Table 28 Estimated Future Peak Heat Demand - Pathway 1 (Cogen) Centralized Heating Alternative

Hot Water Loop	Building Demand (MBH)	Process Demand(1) (MBH)	Total Demand (MBH)
West and Central Loop Total:	18,680	1,310	19,990
East Loop Total:	17,400	1,370	18,770
Cumulative Total:	36,080	2,680	38,760
Totals if Steam Boiler Supplied Loads are Served by Hot Water(2)	36,080	8,680	44,760

Notes:
(1) The process loads are the same as the existing process loads in Table 25. This is because the values presented are peak loads. While the total amount of hot water required will increase over time, the peak quantity of heat lost in from the digestion tanks should remain constant.
(2) This value reflects the demand of the acid digesters, which are currently supplied by the steam boilers in the WAS Thickening Building and are not currently connected to the hot water system.

5.3.1.2 Summary of Hot Water Generation

The intent of this alternative is to utilize the heat recovered from the cogeneration engines to the greatest extent possible. Based on discussion with MMSD, the required redundancy for the heat generation systems is to provide the peak heating demands assuming the cogeneration systems and largest boiler are out of service. This basis was used to establish the capacity for the new West Boilers. Details of these heat generating sources are shown in Table 29.

Table 29 Estimated Future Hot Water Generation Output Capacity Pathway 1 (Cogen) Centralized Heating Alternative

Location	Equipment	Heat Generation Output Capacity (MBH)	Remarks
New Cogeneration/ Boiler Building	New West Boilers 1, 2 and 3	8,400 each	New upsized boilers to account for base assumption of both generators and one of the largest boilers being offline.
SCB2	Existing East Boilers 4, 5 and 6	8,220 each	Existing equipment; no change.
New Cogeneration/ Boiler Building	New Cogeneration Engines 1 and 2 Heat Exchangers	4,500(1) each	Future equipment; estimated capacity.
Total Heat Generation Capacity		58,860	Includes all heat generation equipment being operational.
Firm Heat Generation Capacity		41,640	Assumes both generators and one of the largest boilers is offline.

Notes:
(1) The heat generation for each generator will increase with digester gas production. The heating output capacity value listed will increase to 5,500 MBH over time.

The total heat generation capacity (58,860 MBH) exceeds the total hot water demand (38,760 MBH) by 20,065 MBH. The design basis heat generation capacity (41,640 MBH) with one boiler and both engines offline exceeds the total hot water demand (38,860 MBH) by 2,880 MBH. To transport this heating capacity throughout the site, piping and pumping modifications are required.

Figure 15 is a graphical representation of the hot water system heat demands reflecting both building and process demands. The line labeled "Cogen Heat Generation" includes the heat recovered from the cogeneration engines and the full output of both engines running. Below the intersection point of the Cogen Heat Generation line and the respective demand lines for each system type, excess heat produced by the cogeneration engines will be rejected to atmosphere.

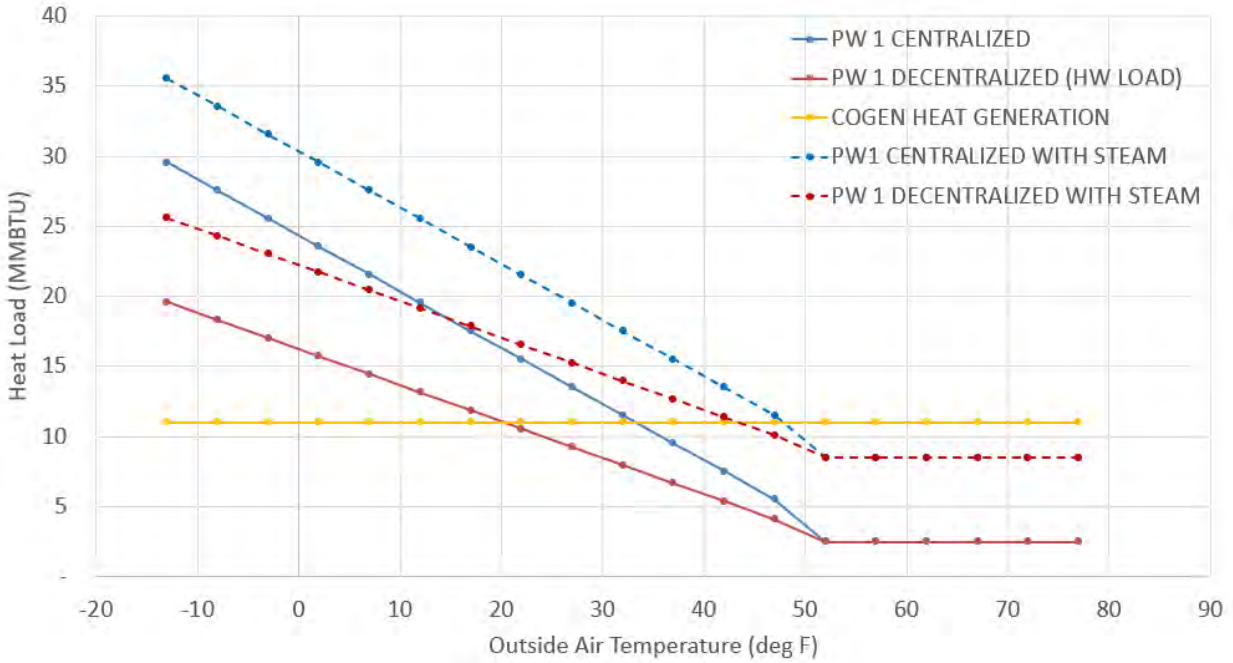

Figure 15 Graph of Hot Water System at Different Outside Air Temperatures Indicating Heating Demands Compared to Cogeneration Engine Output Pathway 1 (Cogen) Centralized Heating Alternative

5.3.1.3 Summary of Infrastructure Modifications

A summary of infrastructure modifications required to implement the Centralized Heating Alternative for Pathway 1 include:

1. New Cogeneration/Boiler Building to house the cogeneration equipment, new West Boilers, and new gas conditioning equipment.
2. Three new West Boilers, pumps, and piping.
3. Installing new supply and return piping to serve buildings currently unheated or currently using an alternative heat source.
4. Installing new ventilation equipment (heating only) to achieve the ventilation modifications noted in the 2021 Facility HVAC Study.

5. Installing upsized site piping to accommodate the increased hot water flow to certain buildings and through sections of pipe to serve all portions of the Centralized Heating Alternative; one common hot water loop would serve all buildings. Additional details are discussed in the Site Piping section below.
6. Installing a new dedicated hot water line from the new Cogeneration/Boiler Building to SCB2.
7. Installing improved controls to monitor hot water demands and generation with the ability to cycle and modulate all heat generating equipment. This information will inform a centralized control system to monitor and control the hot water system throughout the site.
8. Installing temperature and flow monitoring devices at each boiler and cogeneration engine heat exchanger connected to the hot water system.

5.3.1.4 Summary of Building Modifications

Table 30 shows a summary of the recommended equipment modifications for each building served by the Centralized Heating Alternative. A detailed breakdown of the building recommendations can be found in TM 5.

Table 30 Pathway 1 (Cogen) Centralized Heating Alternative Building Modification Summary

Building	Proposed Ventilation Modifications	Existing Heating Equipment	Existing Hot Water Pipe to Building Undersized or New	Centralized Equipment Recommendation(1)
Aeration Control Building 1	Yes	No Heat	New Hot Water Supply	Hot Water MAU
Aeration Control Building 2	Yes	No Heat	New Hot Water Supply	Hot Water MAU
Aeration Control Building 3	Yes	Electric Unit Heater	New Hot Water Supply	Hot Water MAU
Aeration Control Building 4	No	Hot Water Unit Heaters	Existing Piping is Sufficient	-
Blower Building 1	Yes(2)	Hot Water Unit Heaters	Existing Piping is Sufficient	-
Blower Building 2	Yes(2)	Hot Water Unit Heaters	Existing Piping is Sufficient	Hot Water MAU
Cogeneration/Boiler Building	No	Hot Water Unit Heaters	New Hot Water Supply	-
DAF Building	Yes	Hot Water Unit Heaters	Existing Piping is Sufficient	Hot Water MAU
East Aeration Gallery	Yes	No Heat	New Hot Water Supply	Hot Water MAU
East Primary Gallery	Yes	No Heat	New Hot Water Supply	Hot Water MAU
Gas Control Building	Yes	Hot Water Unit Heater	Existing Piping is Sufficient	Hot Water MAU
GBT Building	No	Hot Water AHUs	Existing Piping is Sufficient	-

Building	Proposed Ventilation Modifications	Existing Heating Equipment	Existing Hot Water Pipe to Building Undersized or New	Centralized Equipment Recommendation(1)
GBT Polymer Building	No	Hot Water AHU	Existing Piping is Sufficient	-
Headworks Building	No	Hot Water AHUs and Unit Heaters	Existing Piping Undersized	-
Maintenance Facility / Maintenance Shop Expansion/Fleet Storage Expansion	No	Effluent Heat Recovery, Hot Water In-floor Heat, and Hot Water Unit Heaters	Existing Piping Undersized	-
Metrogro Pump Station	No	Hot Water AHU	Existing Piping is Sufficient	-
Operations Building	No	Hot Water AHUs, Unit Heaters, and VAV Boxes	Existing Piping is Sufficient	-
Primary Sludge Pumping Building No. 1	Yes	Electric Unit Heaters	New Hot Water Supply	Hot Water MAU
Primary Sludge Pumping Building No. 2	Yes	Electric Unit Heaters	New Hot Water Supply	Hot Water MAU
Sludge Control Building No. 1	No	Hot Water AHUs and Unit Heaters	Existing Piping is Sufficient	-
Sludge Control Building No. 2	No	Hot Water AHUs and Unit Heaters	Existing Piping is Sufficient	-
Sludge Control Building No. 3	No	Hot Water AHUs and Unit Heaters	Existing Piping is Sufficient	-
Sludge Dewatering Building	No	Hot Water AHUs and Unit Heaters	Existing Piping is Sufficient	-
Solids Gallery	Yes	-	Existing Piping Undersized	Hot Water MAU
Storage Building 3	No	Hot Water Unit Heaters	No	-
Struvite Building	No	Hot Water AHUs and Unit Heaters	Existing Piping Undersized	-
WAS Thickening Building	No	Hot Water AHUs and Unit Heaters	Existing Piping is Sufficient	-
West Aeration Gallery	Yes	Hot Water Unit Heater and Coil	Existing Piping is Sufficient	Hot Water MAU
West Primary Gallery	Yes	Hot Water Unit Heater	Existing Piping is Sufficient	Hot Water MAU

Notes:
AHU - air handling unit; MAU - make-up air unit; VAV - variable air volume.
(1) Equipment recommendation was obtained from the 2021 Facility HVAC Study.
(2) This table was developed prior to a complete definition of the scope of Liquid Processing Phase 2 Project. This is being handled as part of that project.

5.3.1.5 Summary of Piping Modifications

The estimated future peak demand for each building was used for sizing the new loop piping. Supplying the future demands requires increased hot water flowrates in each of the existing hot water loops. Hydraulic calculations were performed to evaluate the velocity and pressure drop resulting from the increased demands within the existing buried piping. The hydraulic calculations identified several existing pipes that are undersized to meet the future demands. Figure 16 identifies undersized piping that would need to be removed and replaced with larger piping.

In addition to the removal and replacement of existing site piping, there are a number of buildings that previously did not have a heating hot water connection as these buildings were served by electric heat or were not heated. These buildings will require new hot water piping. Figure 16 includes a potential route for the new piping to serve these buildings being added to the hot water system.

The cogeneration engines are the primary source of heat generation on site. A new dedicated supply pipe from the new Cogeneration/Boiler Building to the Solids Gallery will be required. The new pipe will be buried next to the central loop pipe back to the Solids Gallery where it will continue on to SCB2 within the Solids Gallery tunnel.

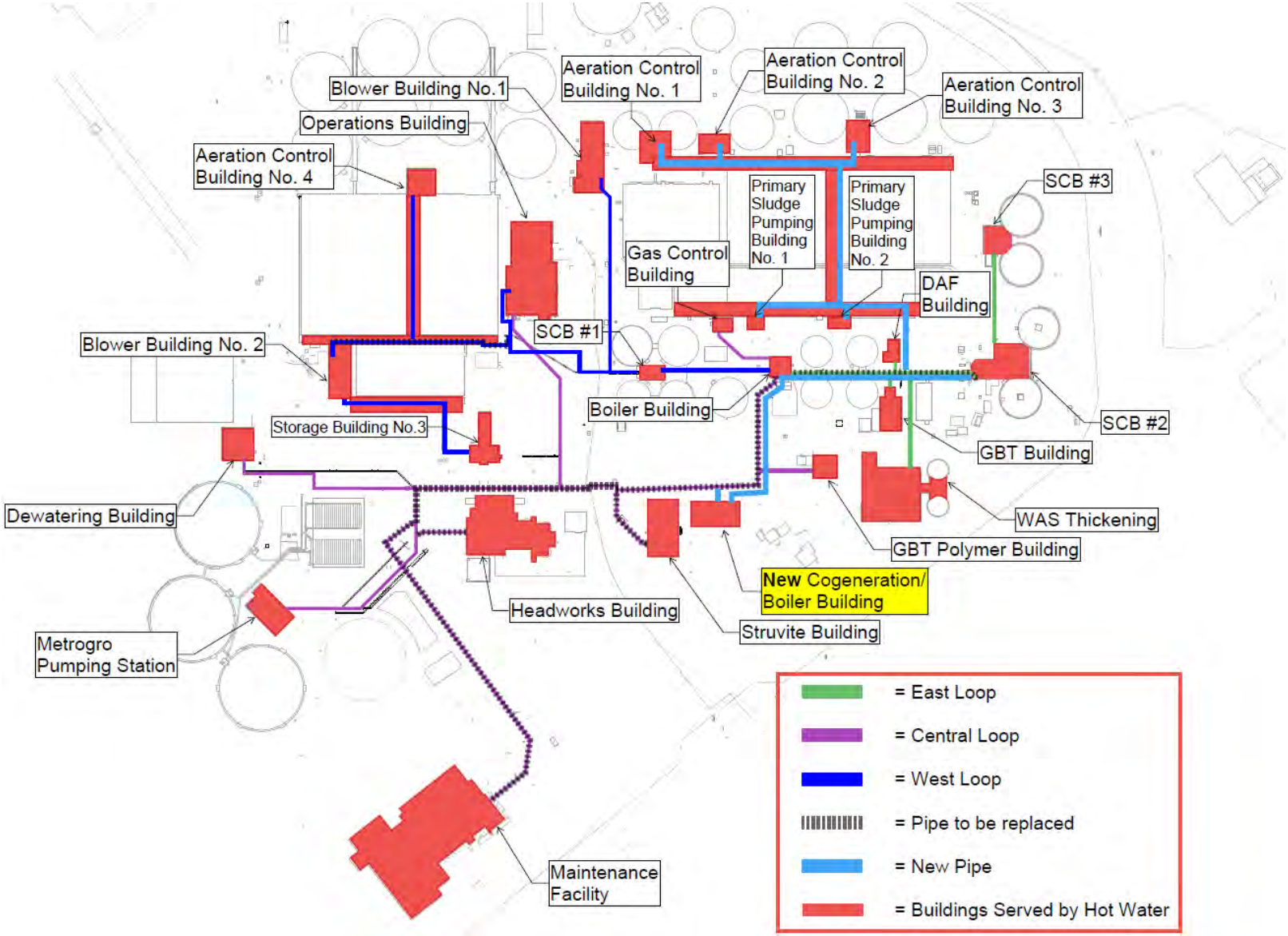

Figure 16 Pathway 1 (Cogen) Centralized Heating Alternative Proposed Site Piping Modifications

This flow arrangement is considered a traditional primary/secondary hot water distribution system. To control the heat supplied to the hot water system, a new dedicated hot water pipe is proposed to be routed from the new Cogeneration/Boiler Building to SCB2. This dedicated pipe will put all the heat generation equipment in series before serving any demands. After the dedicated pipe is connected to the existing boilers in SCB2, the hot water will serve the heat demands throughout the site. Connecting all the generation equipment in series before serving any demands allows the heat equipment to work together to serve the entire site. Based on this piping arrangement, the cogeneration heat exchangers can serve as the primary heat source because they are connected to the system upstream of the other boilers. This will permit the maximum amount of heat recovery from the cogeneration engines. The West and East Boilers will then supplement the hot water loop as needed to maintain the system supply temperature. See Figure 17 for the schematic of the potential new flow arrangement.

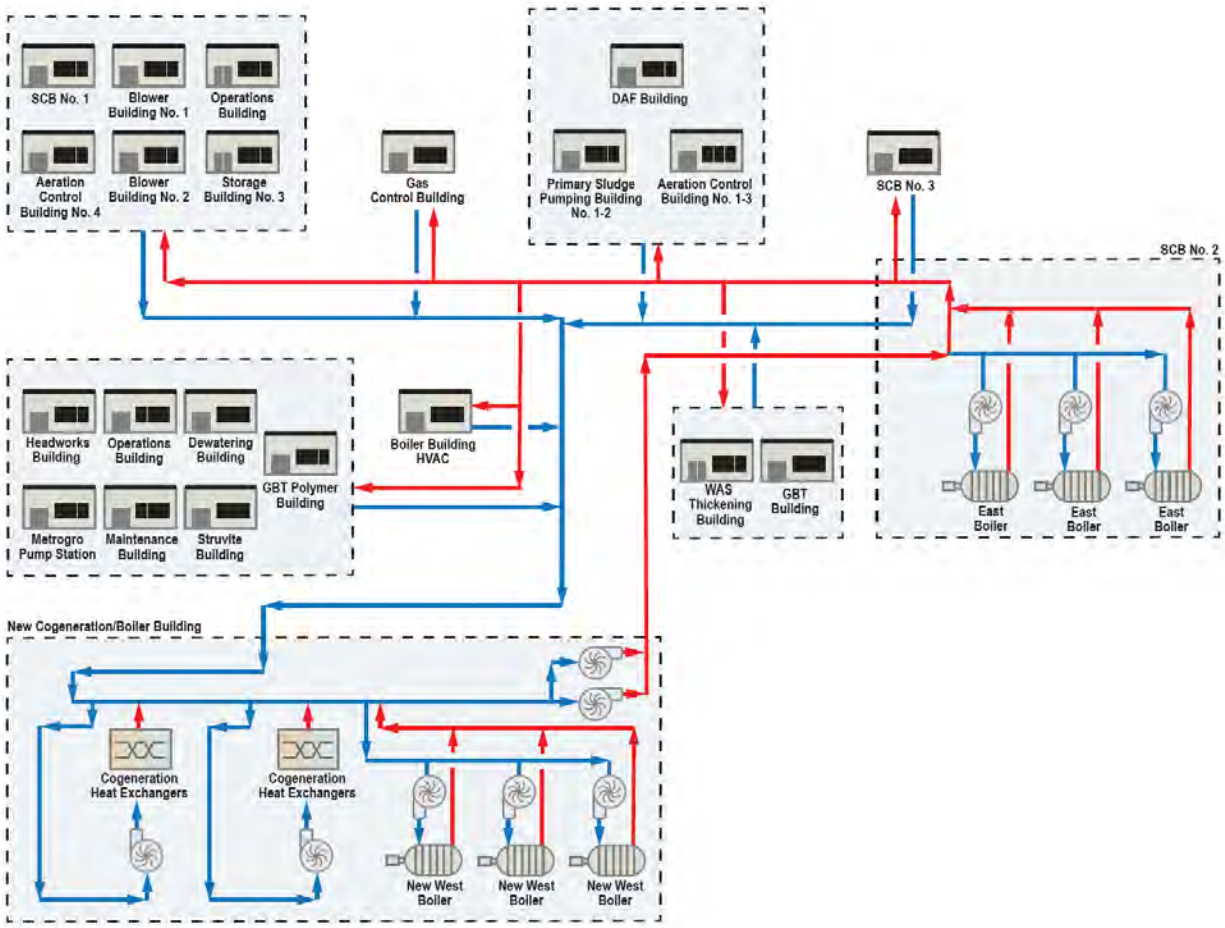

Figure 17 Proposed Cogeneration/Boiler Building Future Hot Water Schematic - Pathway 1 (Cogen) Centralized Heating Alternative

5.3.1.6 GHG Emissions

Per MMSD's GHG assessment protocol, a detailed summary of the energy use and Scope 2 emissions for the Null Pathway and Pathway 1 Centralized in 2040 are presented in Table 31.

Table 31 Design Alternatives Emissions and Energy Use Comparison Table for Pathway 1 Centralized

Process Description	Null Pathway (2040)					Pathway 1 Centralized (2040)				
	Operation (hr/day)	Scope 2 Emissions (MT CO_2e/yr)	Energy Used (kWh/yr)	Energy Used per MG Treated (kWh/MG)(1)	Energy Costs ($/yr)(2)	Operation (hr/day)	Scope 2 Emissions (MT CO_2e/yr)	Energy Used (kWh/yr)	Energy Used per MG Treated (kWh/MG)(1)	Energy Costs ($/yr)(2)
Biogas System	22	110	173,000	9.06	33,200	23	220	341,000	17.9	65,500

Notes:
hr – hour(s); MG – million gallons; mgd – million gallons per day; MT – metric tons; yr - year.
(1) Based on a projected flow of 52.3 mgd in 2040 per Influent Flow and Loading Projections TM (2023).
(2) Based on an energy cost of $0.192/kWh per escalated rate to 2040.

Scope 2 GHG emissions are expected to increase, approximately doubling, under Pathway 1 Centralized as compared to the Null Pathway due to the expected increase in electricity demand to pump hot water throughout the entire site. However, Scope 2 emissions only account for a fraction of overall emissions. Overall emissions are dominated by Scope 1 emissions, specifically emissions from natural gas combustion. Table 32 summarizes the major GHG emissions related to the thermal heating system for Pathway 1 Centralized, as compared to the Null Pathway.

Table 32 Pathway 1 Centralized GHG Emissions

Source(1)	Null Pathway (2040) (MT CO_2e/yr)	Pathway 1 Centralized (2040) (MT CO_2e/yr)
Emissions		
NG Combustion	3,100	3,300
Purchased Electricity	110	220
Total Emissions	3,210	3,520

Notes:
(1) GHG offsets are excluded from the evaluation because the thermal heating system alternatives do not provide any.

Under Pathway 1 Centralized, Scope 1 emissions are expected to increase modestly relative to the Null Pathway due to a minor increase in natural gas use to provide heating to additional buildings on the hot water system, leading to a similarly modest increase in overall emissions.

5.3.1.7 Capital and Life Cycle Costs

The total project cost for Pathway 1 Centralized Heating Alternative is $19,748,000. A summary of these costs is provided in Table 33. This opinion of cost includes construction of a new Cogeneration/Boiler Building to house the boilers and pumps, and all infrastructure and building modifications discussed previously. The construction allowances used in developing the direct costs are noted in Section 1.2.1 Capital and Life Cycle Cost Assumptions.

Table 33 Pathway 1 (Cogen) Centralized Heating Alternative Project Cost

Description	Percentage	Cost
Direct Costs (includes construction allowances)		$11,448,000
General Conditions Allowance	15%	$1,717,000
Contractor Overhead and Profit	20%	$2,290,000
Bonds and Insurance	3%	$343,000
Total Construction Cost		$15,798,000
Engineering, Legal, and Administrative Fees	15%	$2,370,000
Construction Management	10%	$1,580,000
Total Project Cost Estimate (2025 dollars)		$19,748,000

Pathway 1 Centralized Heating Alternative hot water system annual O&M costs include the following:

- Natural gas costs for the hot water system (used by the boilers).
- Natural gas costs associated with heating the acid digesters (steam boilers).
- Electricity costs: This is the cost associated with the pumping energy required to circulate hot water.
- Heating hot water system maintenance and operation costs: O&M for the hot water system includes MMSD operations staff (labor and maintenance) and consists of regular activities for the boilers, pumps, and HVAC equipment. These include filter replacement, coil replacement, boiler inspections, and water chemistry maintenance. This annual cost was calculated as 2 percent of HVAC and boiler equipment costs.

The NPV for Pathway 1 Centralized Heating Alternative evaluated the costs associated with the hot water system over the estimated 20-year life of the equipment from 2029 through 2048. The project cost was escalated to 2028 dollars. A summary table presenting the capital cost and the average of the 20-year annual O&M costs is shown in Table 34. Cost is expressed as NPV showing the value of the overall project in 2028 dollars. Assumptions used for the analysis are summarized in Section 1.2.1 Capital and Life Cycle Cost Assumptions. The detailed NPV calculations are provided in Appendix E.

Table 34 Pathway 1 (Cogen) Centralized Heating Alternative Net Present Value

Description	Centralized Costs
Estimated Project Cost (2028 dollars)	$21,895,000
Annual Costs	
Natural Gas Cost Hot Water System ($/yr)	$154,000
Natural Gas Cost Gas-Fired Equipment	-
Natural Gas Cost Acid Digesters ($/yr)	$272,000
Electrical Cost ($/yr)	$48,000
Heating Hot Water System O&M Cost, ($/yr)	$34,000
Net Annual Costs/(Revenues) ($/yr)	$508,000
Net Present Value ($)	$32,070,000

5.3.2 Pathway 1 Cogeneration with Decentralized Heating System Alternative

The Pathway 1 Decentralized Heating Alternative includes reduced hot water demands compared to the centralized heating alternative, generally serving the central portion of the site, as well as the process heating demands. The intent of this alternative is to continue to provide hot water heating to serve buildings that are within, or very close to, the existing heating hot water loop, and also to continue to provide process heat to the digestion facilities. Buildings not served by the hot water loop will be heated with natural gas-fired equipment. Similar to the Centralized Heating Alternative, the Decentralized Heating Alternative will no longer have separate east and west/central loops. All buildings served by hot water will be served by a common hot water loop. See Figure 18 for the heating alternative for each building.

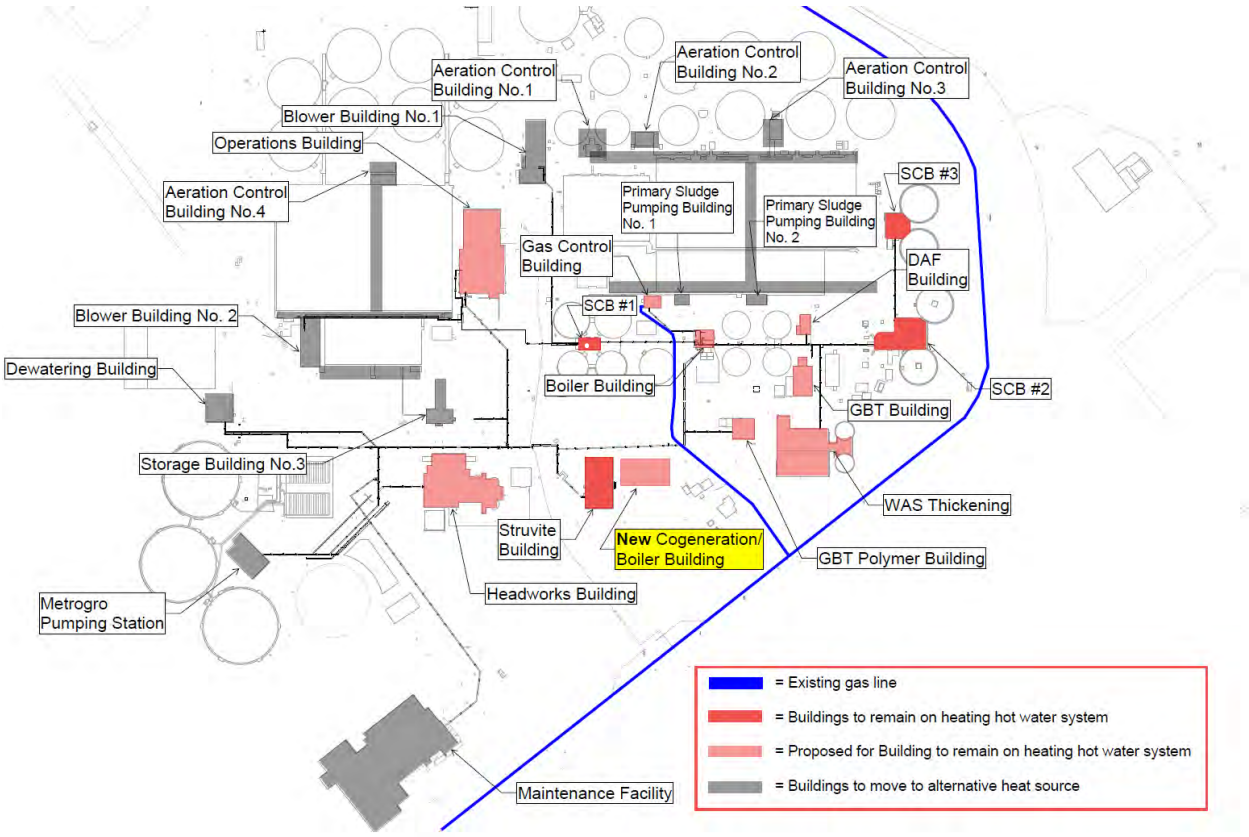

Figure 18 Pathway 1 (Cogen) Decentralized Heating Alternative Building Heat Source Map

5.3.2.1 Summary of Hot Water Demands

The future heating demands and generation for the Pathway 1 Decentralized Heating Alternative were reviewed in TM 5. The demands on the heating hot water system are shown along with the demands that will now be served by the natural gas system. A detailed breakdown of the building demands and heat generation is included in the Appendix. See Table 35 for a summary of the natural gas and heating hot water demand totals.

Table 35 Estimated Future Peak Heat Demand - Pathway 1 (Cogen) Decentralized Heating Alternative

Hot Water Loop	Building Demand (MBH)	Process Demand (MBH)	Total Demand (MBH)
Heating Hot Water Totals	22,390	2,680	25,070
Totals if Steam Boiler Supplied Loads are Served by Hot Water (1)	22,390	8,680	31,070
Total of Demands Served by Natural Gas Fired Equipment	13,690	NA	13,690

Notes:
(1) This value reflects the demand of the acid digesters, which are currently supplied by the steam boilers in the WAS Thickening Building and are not currently connected to the hot water system.

5.3.2.2 Summary of Hot Water Generation

The intent for the Pathway 1 Decentralized Heating Alternative is to use the heat recovered from the Cogeneration Engines to the greatest extent possible. Redundancy requirements are the same as Pathway 1 Centralized Heating Alternative, which requires the maximum heating needs to be met with both cogeneration engines and one of the largest boilers are out of service. Details of the heat generation sources are shown in Table 36.

Table 36 Estimated Future Hot Water Generation Output Capacity Pathway 1 (Cogen) Decentralized Heating Alternative

Location	Equipment	Heat Generation Output Capacity (MBH)	Remarks
New Cogeneration/ Boiler Building	New West Boilers 1, 2 and 3	4,180 each	New equipment; same capacity as existing.
SCB2	Existing East Boilers 4, 5 and 6	8,220 each	Existing equipment; no change.
New Cogeneration/ Boiler Building	New Cogeneration Engines 1 and 2 Heat Exchangers	4,500 each(1)	Future equipment; estimated capacity.
Total Heat Generation Capacity:		46,200	Includes all heat generation equipment being operational.
Firm Heat Generation Capacity:		28,980	Assumes both generators and one of the largest boilers in are offline.

Notes:
(1) The heat generation for each generator will increase with digester gas production. The heating output capacity value listed will increase to 5,500 MBH over time.

The new cogeneration engines potential heat output is approximately 2.5 times more compared with the current engines. For this alternative, there is a smaller quantity of hot water needed to satisfy the building demands because there are fewer buildings connected to the hot water system.

5.3.2.3 Summary of Infrastructure Modifications

A summary of infrastructure modifications required to implement the Decentralized Heating Alternative for Pathway 1 include:

1. New Cogeneration/Boiler Building to house the new equipment. Although the new boilers may be able to fit into the existing Boiler Building to accommodate the new boilers may result in needing to modify the structure. For Pathway 1 a new Cogeneration Building is required, we proposed that structure be sized to accommodate new boilers as well.
2. Installing new boilers, pumps, and piping. The new West Boilers will be located in the new Cogeneration/Boiler Building.
3. Installing new natural gas piping to serve the buildings not served by the hot water loop.
4. Installing new ventilation equipment (heating only) to achieve the ventilation modifications noted in the 2021 Facility HVAC Study.
5. Installing upsized site piping to accommodate the increased hot water flow to certain buildings and through sections of pipe to serve all portions of the Decentralized Heating Alternative and to allow one common hot water loop to serve the required buildings.
6. Installing a new dedicated hot water line from the new Cogeneration/Boiler Building to SCB2.
7. Installing improved controls to monitor hot water demands and generation with the ability to cycle and modulate all heat generating equipment. This information will inform a centralized control system to monitor and control the hot water system throughout the site.
8. Installing temperature and flow monitoring devices at each piece of equipment generating hot water that is connected to the hot water system.

5.3.2.4 Summary of Building Modifications

Table 37 shows a summary of the recommended equipment modifications for each building in the Decentralized Heating Alternative. A detailed breakdown of the building recommendations can be found in TM 5 in Appendix E.

Table 37 Pathway 1 (Cogen) Decentralized Heating Alternative Building Modification Summary

Building	Proposed Ventilation Modifications	Existing Heating Equipment	Existing Hot Water Pipe to Building Undersized or Natural Gas Required	Decentralized Equipment Recommendation(1)
Aeration Control Building 1	Yes	No Heat	New Natural Gas Supply	Gas-fired MAU
Aeration Control Building 2	Yes	No Heat	New Natural Gas Supply	Gas-fired MAU
Aeration Control Building 3	Yes	Electric Unit Heater	New Natural Gas Supply	Gas-fired MAU
Aeration Control Building 4	No	Hot Water Unit Heaters	New Natural Gas Supply	Gas-fired Unit Heaters
Blower Building 1	Yes(2)	Hot Water Unit Heaters	New Natural Gas Supply	Gas-fired Unit Heaters
Blower Building 2	Yes(2)	Hot Water Unit Heaters	New Natural Gas Supply	Gas-fired MAU
Cogeneration/Boiler Building	No	Hot Water Unit Heaters	New Hot Water Supply	-

Building	Proposed Ventilation Modifications	Existing Heating Equipment	Existing Hot Water Pipe to Building Undersized or Natural Gas Required	Decentralized Equipment Recommendation(1)
DAF Building	Yes	Hot Water Unit Heaters	Existing Piping is Sufficient	Hot Water MAU
East Aeration Gallery	Yes	No Heat	New Natural Gas Supply	Gas-fired MAU
East Primary Gallery	Yes	No Heat	New Natural Gas Supply	Gas-fired MAU
Gas Control Building	Yes	Hot Water Unit Heater	Existing Piping is Sufficient	Hot Water MAU
GBT Building	No	Hot Water AHUs	Existing Piping is Sufficient	-
GBT Polymer Building	No	Hot Water AHU	Existing Piping is Sufficient	-
Headworks Building	No	Hot Water AHUs and Unit Heaters	Existing Piping Undersized	-
Maintenance Facility/Maintenance Shop Expansion/Fleet Storage Expansion	No	Effluent Heat Recovery, Hot water In-floor Heat, and Hot Water Unit Heaters	New Natural Gas Supply	Gas-fired Unit Heaters
Metrogro Pump Station	No	Hot Water and AHU	New Natural Gas Supply	Gas-fired MAU
Operations Building	No	Hot Water AHUs, Unit Heaters, and VAV Boxes	Existing Piping is Sufficient	-
Primary Sludge Pumping Building No. 1	Yes	Electric Unit Heaters	New Natural Gas Supply	Gas-fired MAU
Primary Sludge Pumping Building No. 2	Yes	Electric Unit Heaters	New Natural Gas Supply	Gas-fired MAU
Sludge Control Building No. 1	No	Hot Water AHUs and Unit Heaters	Existing Piping is Sufficient	-
Sludge Control Building No. 2	No	Hot Water AHUs and Unit Heaters	Existing Piping is Sufficient	-
Sludge Control Building No. 3	No	Hot Water AHUs and Unit Heaters	Existing Piping is Sufficient	-
Sludge Dewatering	No	Hot Water AHUs and Unit Heaters	New Natural Gas Supply	Gas-fired MAU
Solids Gallery	Yes	-	New Natural Gas Supply	Gas-fired MAU
Storage Building 3	No	Hot Water Unit Heaters	New Natural Gas Supply	Gas-fired Unit Heaters
Struvite Building	No	Hot Water AHUs and Unit Heaters	Existing Piping Undersized	-
WAS Thickening Building	No	Hot Water AHUs and Unit Heaters	Existing Piping is Sufficient	-
West Aeration Gallery	Yes	Hot Water Unit Heater and Coil	New Natural Gas Supply	Gas-fired MAU
West Primary Gallery	Yes	Hot Water Unit Heater	New Natural Gas Supply	Gas-fired MAU

Notes:
(1) Equipment recommendation was obtained from the 2021 Facility HVAC Study.
(2) This table was developed prior to a complete definition of the scope of Liquid Processing Phase 2 Project. This is being handled as part of that project.

5.3.2.5 Summary of Piping Modifications

To address the deficiencies identified in Section 5.1.3, there are modifications to the site piping and flow arrangement of the hot water system required. Similar to the Centralized Heating Alternative, the existing hot water site piping, which includes piping buried or in tunnels, for the East, West, and Central distribution systems were reviewed to determine if the existing piping could be used to serve the demands noted in Table 35. The estimated future peak demand for each building was used to confirm flow velocity in existing piping. Hydraulic calculations were performed to evaluate the velocity and pressure drop resulting from the changes in demands, assuming the existing buried piping remained in service.

The buildings previously noted to have gas-fired equipment will need a new gas line to the building. A new natural gas service will be run from the city main throughout the site to serve the various buildings. The route shown in Figure 19 is an approximate location of the proposed natural gas pipe route, and final pipe routing will be determined during detailed design.

Figure 19 identifies existing natural gas piping, proposed natural gas piping, and undersized hot water piping (based on hydraulic calculations) that would need to be removed and upsized.

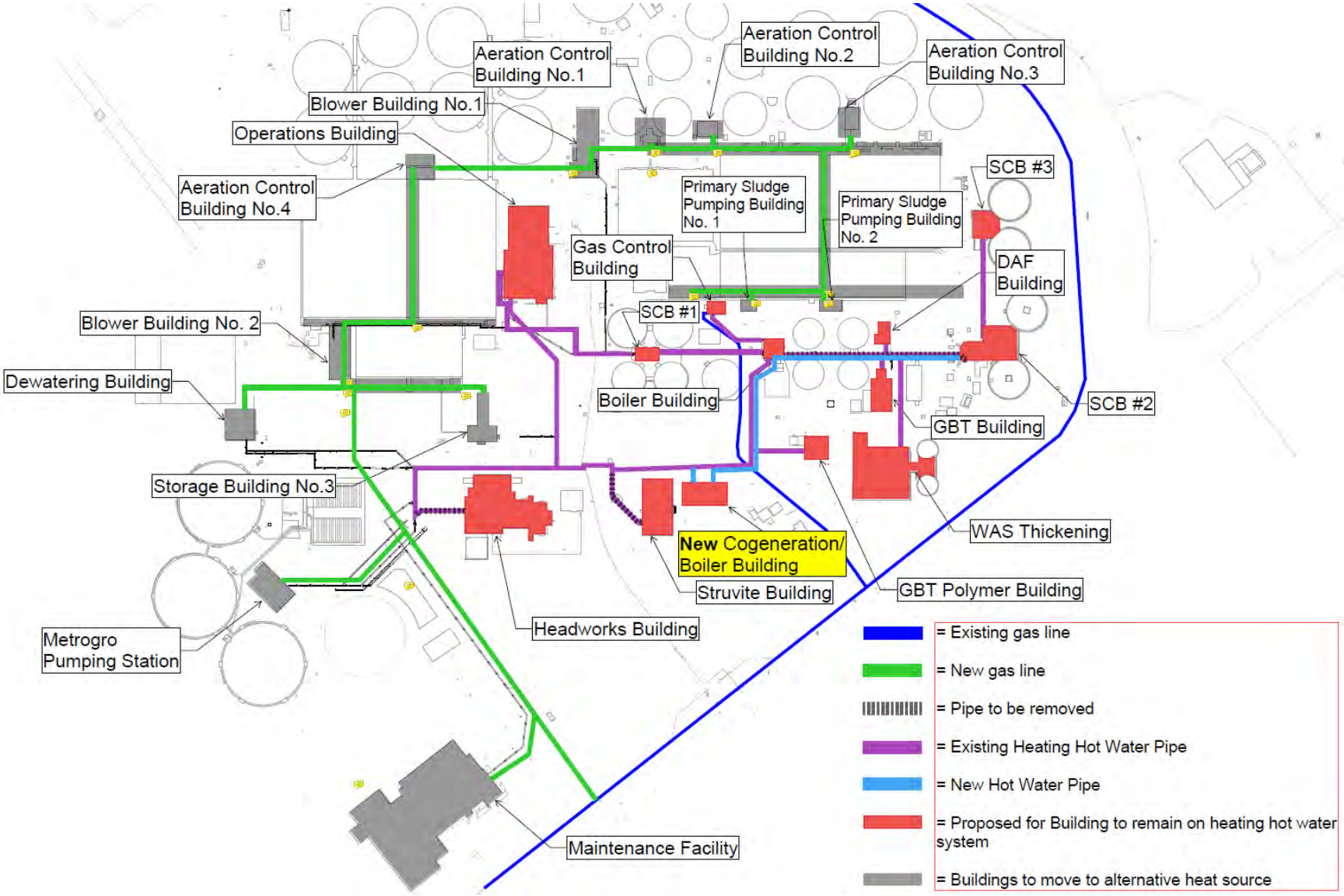

Figure 19 Pathway 1 (Cogen) Decentralized Heating Alternative Proposed Site Piping Modifications

The flow arrangement for the Decentralized Heating Alternative is the same as described in the Centralized Alternative. See Figure 20 for the schematic of the potential new flow arrangement.

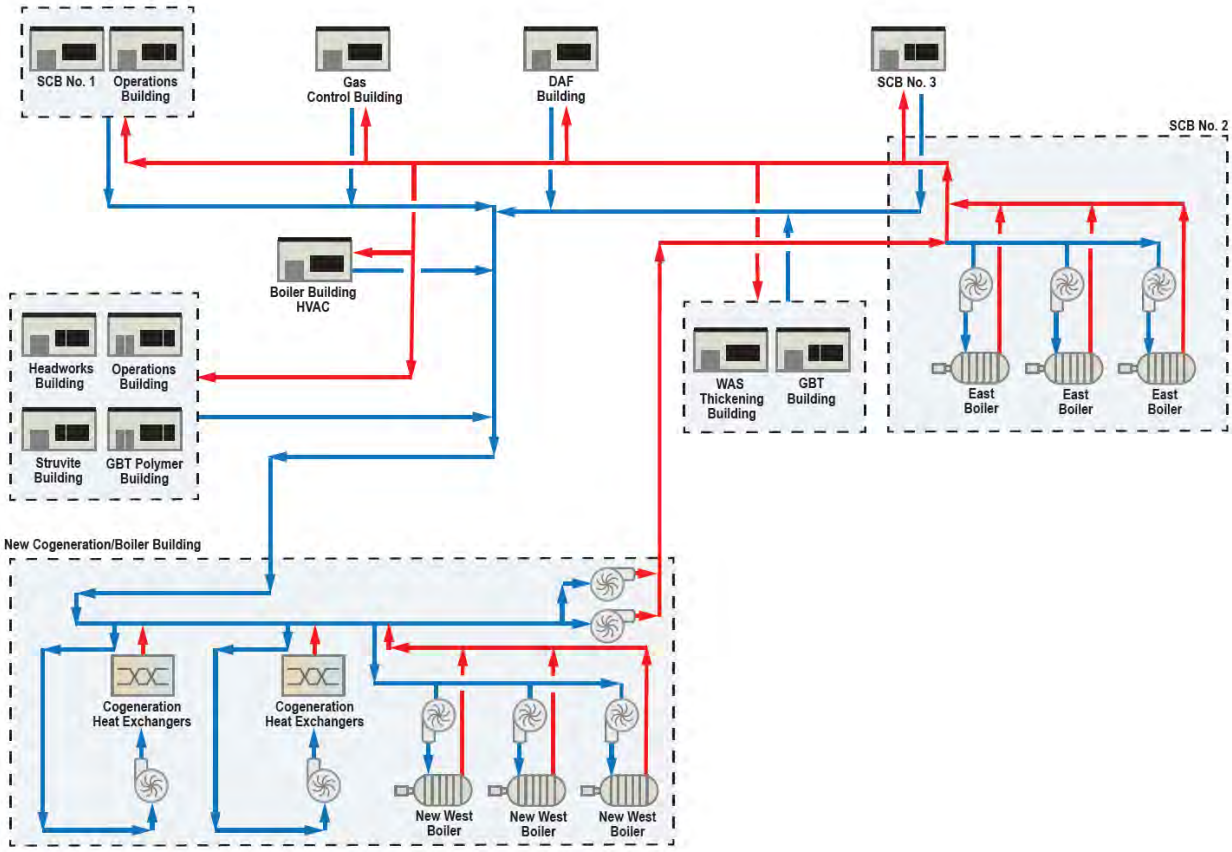

Figure 20 Proposed Future Hot Water Schematic - Pathway 1 (Cogen) Decentralized Heating Alternative

5.3.2.6 GHG Emissions

Per MMSD's GHG assessment protocol, a detailed summary of the energy use and Scope 2 emissions for the Null Pathway and Pathway 1 Decentralized in 2040 are presented in Table 38.

Table 38 Design Alternatives Emissions and Energy Use Comparison Table for Pathway 1 Decentralized

Process Description	Null Pathway (2040)					Pathway 1 Decentralized (2040)				
	Operation (hr/day)	Scope 2 Emissions (MT CO_2e/yr)	Energy Used (kWh/yr)	Energy Used per MG Treated (kWh/MG)(1)	Energy Costs ($/yr)(2)	Operation (hr/day)	Scope 2 Emissions (MT CO_2e/yr)	Energy Used (kWh/yr)	Energy Used per MG Treated (kWh/MG)(1)	Energy Costs ($/yr)(2)
Biogas System	22	110	173,000	9.06	33,200	23	100	158,000	8.28	30,300

Notes:
(1) Based on a projected flow of 52.3 mgd in 2040 per Influent Flow and Loading Projections TM (2023).
(2) Based on an energy cost of $0.192/kWh per escalated rate to 2040.

Scope 2 GHG emissions are expected to remain approximately the same under Pathway 1 Decentralized as compared to the Null Pathway. However, Scope 2 emissions only account for a fraction of overall emissions. Overall emissions are dominated by Scope 1 emissions, specifically emissions from natural gas combustion. Table 39 summarizes the major GHG emissions related to the thermal heating system for Pathway 1 Decentralized, as compared to the Null Pathway.

Table 39 Pathway 1 Decentralized GHG Emissions

Source(1)	Null Pathway (2040) (MT CO_2e/yr)	Pathway 1 Decentralized (2040) (MT CO_2e/yr)
Emissions		
NG Combustion	3,100	3,500
Purchased Electricity	110	100
Total Emissions	3,210	3,600

Notes:
(1) GHG offsets are excluded from the evaluation because the thermal heating system alternatives do not provide any.

Under Pathway 1 Decentralized, Scope 1 emissions are expected to increase modestly relative to the Null Pathway due to a minor increase in natural gas use for decentralized heating of buildings not served by the main hot water loop, leading to a similarly modest increase in overall emissions.

5.3.2.7 Capital and Life Cycle Costs

The total project cost opinion for Pathway 1 Decentralized Heating Alternative is approximately $15 million. A summary of these costs is provided in Table 40. A detailed project cost opinion is provided in TM 5. This estimated cost includes construction of a new Cogeneration/Boiler Building to house the new boilers and pumps, and all infrastructure and building modifications discussed previously. This will consolidate the heating equipment with the Cogeneration Engines that will go in as a part of Pathway 1. The construction allowances used in developing the direct costs are noted in Section 1.2.1 Capital and Life Cycle Cost Assumptions.

Table 40 Pathway 1 (Cogen) Decentralized Heating Alternative Project Cost

Description	Percentage	Cost
Direct Costs (includes construction allowances)		$8,824,000
General Conditions Allowance	15%	$1,324,000
Contractor Overhead and Profit	20%	$1,765,000
Bonds and Insurance	3%	$265,000
Total Construction Cost		$12,178,000
Engineering, Legal, and Administrative Fees	15%	$1,827,000
Construction Management	10%	$1,218,000
Total Project Cost Estimate (2025 dollars)		$15,223,000

Pathway 1 Decentralized Heating Alternative hot water system annual operation and maintenance costs include the following:

- Natural gas costs for the hot water system: This includes both natural gas used by the boilers and natural gas used by gas-fired heating equipment for building heating (such as make up air units and gas unit heaters).

- Natural gas costs associated with heating the acid digesters: This is broken out independently because, as noted previously, the acid digesters do not currently utilize hot water and are not connected to the hot water system.
- Electricity costs: This is the cost associated with the pumping energy required to circulate hot water.
- Heating hot water system maintenance and operation costs: Similar to the centralized heating alternative, annual O&M costs were calculated as 2 percent of HVAC equipment costs.

The NPV for Pathway 1 Decentralized Heating Alternative evaluated the costs associated with the hot water system over the estimated 20-year life of the equipment from 2029 through 2048. The project cost in Table 40 was escalated to 2028 dollars. A summary table presenting the capital cost and the average of the 20-year O&M costs is shown in Table 41. Cost is expressed as NPV showing the value of the overall project in 2028 dollars. Assumptions used for the analysis are summarized in Section 1.2.1 Capital and Life Cycle Cost Assumptions. The detailed NPV calculations are provided in Appendix E

Table 41 Pathway 1 (Cogen) Decentralized Heating Alternative Net Present Value

Description	Decentralized Costs
Estimated Project Cost (2028 dollars)	$16,878,000
Annual Costs	
Natural Gas Cost Hot Water System ($/yr)	$41,000
Natural Gas Cost Gas-Fired Equipment ($/yr)	$140,000
Natural Gas Cost Acid Digesters ($/yr)	$272,000
Electrical Cost ($/yr)	$22,000
Heating Hot Water System O&M Cost, ($/yr)	$34,000
Net Annual Costs/(Revenues), $/year	$509,000
Net Present Value ($)	$27,078,000

5.4 Pathway 2 - RNG Evaluation

Pathway 2 (RNG) assumes all the digester gas produced on site is processed and supplied to the natural gas utility. Pathway 2 impacts the site heating hot water system by removing the existing engine generators in SCB2 and the gas-engine blower in Blower Building No. 1. Pathway 2 includes centralized and decentralized heating alternatives similar to Pathway 1,

5.4.1 Pathway 2 RNG Centralized Heating Alternative

The Pathway 2 Centralized Heating Alternative assumes hot water will be the heat source for all process heating demands currently served by hot water and all HVAC heating demands. Pathway 2 Centralized Heating Alternative includes hot water serving the same buildings as Pathway 1 Centralized Heating Alternative (see Figure 14). Also, similar to Pathway 1 Centralized Heating Alternative, there will no longer be separate east and west/central loops, but rather the existing loops will be combined into one common plant loop serving all buildings.

5.4.1.1 Summary of Hot Water Demands

The future heating demands for the Pathway 2 Centralized Heating Alternative and presented in Table 38. The values in Table 42 are the same as Table 28.

Table 42 Estimated Future Peak Heat Demand - Pathway 2 (RNG) Centralized Heating Alternative

Hot Water Loop	Building Demand (MBH)	Process Demand(1) (MBH)	Total Demand (MBH)
West and Central Loop Total:	18,680	1,310	19,990
East Loop Total:	17,400	1,370	18,770
Cumulative Total:	36,080	2,680	38,760
Totals if Steam Boiler Supplied Loads are Served by Hot Water (2)	36,080	8,680	44,760

Notes:
(1) The process loads are the same as the existing process loads in Table 25. This is because the values presented are peak loads. While the total amount of hot water required will increase over time, the peak quantity of heat lost from the digestion tanks should remain constant.
(2) This value reflects the demand of the acid digesters, which are currently supplied by the steam boilers in the WAS Thickening Building and are not currently connected to the hot water system.

5.4.1.2 Summary of Hot Water Generation

Heat generation for Pathway 2 Centralized Heating Alternative is provided only by boilers because there are no cogeneration engines using digester gas. As noted previously, the peak heating demands need to be met assuming the largest boiler is out of service. Using this basis, the required capacity of each of the new West Boilers is the same as in Pathway 1 Centralized Heating Alternative (8,400 MBH output capacity) as noted in Table 43.

Table 43 Estimated Future Hot Water Generation Output Capacity Pathway 2 (RNG) Centralized Heating Alternative

Location	Equipment	Heat Generation Output Capacity (MBH)	Remarks
New Boiler Building	New West Boilers 1, 2 and 3	8,400 each	New upsized boilers to account for base assumption one of the largest boilers being out of service.
SCB2	Existing East Boilers 4, 5 and 6	8,220 each	Existing equipment; no change.
Total Heat Generation Capacity		49,860	Includes all heat generation equipment being operational.
Firm Heat Generation Capacity		41,640	Assumes one of the largest boilers being out of service.

For Pathway 2 Centralized Heating Alternative, the total heat generation capacity (49,860 MBH) exceeds the total hot water demand (38,760 MBH) by 11,100 MBH. In this situation, there is about 22 percent excess heat generating capacity above the cumulative total demands. The firm heat generation capacity with one boiler offline is the same as Pathway 1 Centralized Alternative and includes 7 percent excess heat generating capacity above the cumulative total demands. Similar to Pathway 1 Centralized Alternative, transporting this heating capacity throughout the site requires piping and pumping modifications.

Because the new West Boilers for Pathway 2 Centralized Heating Alternative are the same size as Pathway 1 Centralized Alternative, they are too large to fit in the existing Boiler Building, and a new building is required to house these boilers. It is proposed the new West Boilers be installed in a new building in a similar location to the proposed Cogeneration/Boiler Building in Pathway 1.

5.4.1.3 Summary of Infrastructure, Building, and Piping Modifications

The infrastructure and building modifications for Pathway 2 Centralized Heating Alternative are similar to those in Pathway 1 Centralized Heating Alternative with the exception of a new Cogeneration Building. Because of this the flow arrangement and piping modifications for Pathway 2 Centralized Heating Alternative are the same as Pathway 1 Centralized Alternative. See Figure 21 for the schematic of the potential new flow arrangement.

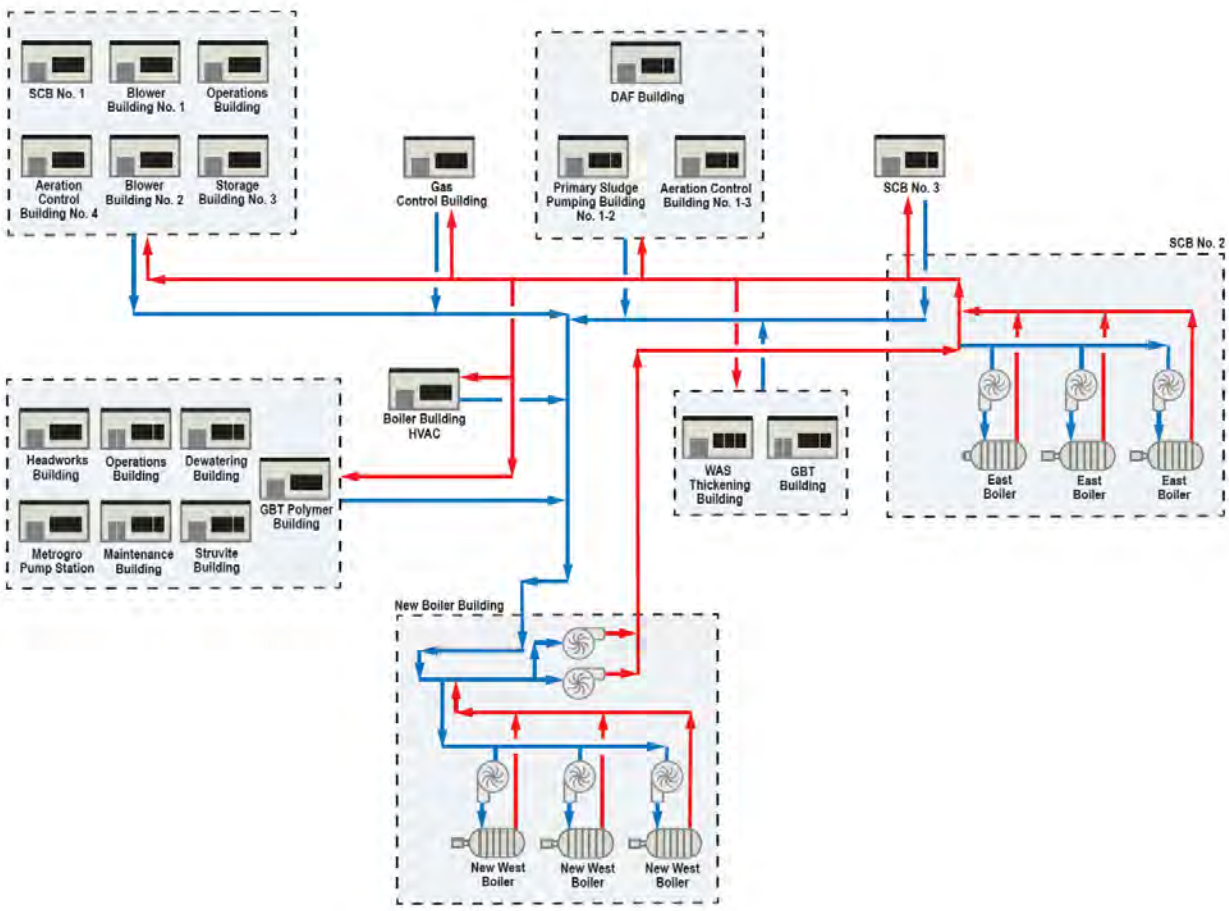

Figure 21 Proposed Future Hot Water Schematic - Pathway 2 Centralized Heating Alternative

5.4.1.4 GHG Emissions

Per MMSD's GHG assessment protocol, a detailed summary of the energy use and Scope 2 emissions for the Null Pathway and Pathway 2 Centralized in 2040 are presented in Table 44.

Table 44 Design Alternatives Emissions and Energy Use Comparison Table for Pathway 2 Centralized

Process Description	Null Pathway (2040)					Pathway 2 Centralized (2040)				
	Operation (hr/day)	Scope 2 Emissions (MT CO_2e/yr)	Energy Used (kWh/yr)	Energy Used per MG Treated (kWh/MG)(1)	Energy Costs ($/yr)(2)	Operation (hr/day)	Scope 2 Emissions (MT CO_2e/yr)	Energy Used (kWh/yr)	Energy Used per MG Treated (kWh/MG)(1)	Energy Costs ($/yr)(2)
Biogas System	22	110	173,000	9.06	33,200	23	220	341,000	17.9	65,500

Notes:
(1) Based on a projected flow of 52.3 mgd in 2040 per Influent Flow and Loading Projections TM (2023).
(2) Based on an energy cost of $0.192/kWh per escalated rate to 2040.

Scope 2 GHG emissions are expected to increase, approximately doubling, under Pathway 2 Centralized as compared to the Null Pathway due to the expected increase in electricity demand to pump hot water throughout the entire site. However, Scope 2 emissions only account for a fraction of overall emissions. Overall emissions are dominated by Scope 1 emissions, specifically emissions from natural gas combustion. Table 45 summarizes the major GHG emissions related to the thermal heating system for Pathway 2 Centralized, as compared to the Null Pathway.

Table 45 Pathway 2 Centralized GHG Emissions

Source(1)	Null Pathway (2040) (MT CO_2e/yr)	Pathway 2 Centralized (2040) (MT CO_2e/yr)
Emissions		
NG Combustion	3,100	6,300
Purchased Electricity	110	220
Total Emissions	3,210	6,520

Notes:
(1) GHG offsets are excluded from the evaluation because the thermal heating system alternatives do not provide any.

Under Pathway 2 Centralized, Scope 1 emissions are expected to increase significantly relative to the Null Pathway due to a major increase in natural gas use for heating to compensate for the loss of the cogeneration engines and the heat previously recovered from them. Consequently, overall emissions are expected to approximately double for Pathway 2 Centralized relative to the Null Pathway.

5.4.1.5 Capital and Life Cycle Costs

The total project cost for Pathway 2 Centralized Heating Alternative is approximately $20 million (2025 dollars). A summary of these costs is provided in Table 46, and a detailed project cost breakdown is provided in TM 5 in Appendix E. This opinion of cost includes construction of a new Boiler Building, and all infrastructure and building modifications as discussed in Pathway 1 Centralized Alternative. The construction allowances used in developing the direct costs are noted in Section 1.2.1 Capital and Life Cycle Cost Assumptions.

Table 46 Pathway 2 (RNG) Centralized Heating Alterative Project Cost

Description	Percentage	Cost
Direct Costs (includes construction allowances)		$11,448,000
General Conditions Allowance	15%	$1,717,000
Contractor Overhead and Profit	20%	$2,290,000
Bonds and Insurance	3%	$343,000
Total Construction Cost		$15,798,000
Engineering, Legal, and Administrative Fees	15%	$2,370,000
Construction Management	10%	$1,580,000
Total Project Cost Estimate (2025 dollars)		$19,748,000

Pathway 2 Centralized Heating Alternative hot water system annual operation and maintenance costs include the same elements as the Pathway 1 Centralized Alternative. Natural gas associated with Pathway 2 are higher compared with Pathway 1 because there is no heat recovery from cogeneration engine to provide supplemental heat to the hot water system. See Table 47 for the annual costs.

The NPV for Pathway 1 Centralized Alternative evaluated the costs associated with the hot water system over the estimated 20-year life of the equipment from 2029 through 2048. The project cost in Table 47 was escalated to 2028 dollars. A summary table presenting the capital cost and the average of the 20-year present worth O&M costs is shown in Table 47. Cost is expressed as NPV showing the value of the overall project in 2028 dollars. The detailed NPV calculations are provided in Appendix E.

Table 47 Pathway 2 (RNG) Centralized Heating Alternative Net Present Value

	Decentralized Costs
Estimated Project Cost (2028 dollars)	$21,895,000
Annual Costs	
Natural Gas Cost Hot Water System ($/yr)	$556,000
Natural Gas Cost Gas-Fired Equipment	-
Natural Gas Cost Acid Digesters ($/yr)	$272,000
Electrical Cost ($/yr)	$48,000
Heating Hot Water System O&M Cost, ($/yr)	$34,000
Net Annual Costs/(Revenues), $/year	$910,000
Net Present Value ($)	$40,105,000

5.4.2 Pathway 2 RNG Decentralized Heating Alternative

The Pathway 2 Decentralized Heating Alternative includes reduced heating demands. Pathway 2 Decentralized Heating Alternative will provide hot water to the same buildings identified in the Pathway 1 Decentralized Alternative, since the same buildings will be served (for reference see Figure 18). As for all alternatives under Pathways 1 and 2, there will no longer be separate east and west/central loops. All buildings served by hot water will be served by a common hot water loop.

5.4.2.1 Summary of Hot Water Demands

The future heating demands for the Pathway 2 Decentralized Heating Alternative and presented in Table 48. The values in Table 48 are the same as Table 35.

Table 48 Estimated Future Peak Heat Demand - Pathway 2 (RNG) Decentralized Heating Alternative

Hot Water Loop	Building Demand (MBH)	Process Demand (MBH)	Total Demand (MBH)
Heating Hot Water Totals	22,390	2,680	25,070
Totals if Steam Boiler Supplied Loads are Served by Hot Water(1)	22,390	8,680	31,070
Total of Demands Served by Natural Gas Fired Equipment	13,690	NA	13,690

Notes:
(1) This value reflects the demand of the acid digesters, which are currently supplied by the steam boilers in the WAS Thickening Building and are not currently connected to the hot water system.

5.4.2.2 Summary of Hot Water Generation

Hot water generation for Pathway 2 Decentralized Heating Alternative is provided only by boilers. This pathway does not recover any heat because there are no cogeneration engines. Similar to Pathway 1 Decentralized Alternative, the redundancy requirements for heat generating equipment assumes one of the largest boilers is out of service. Using this basis, the required capacity of each of the new West Boilers is the same as in the existing boilers (4,180 MBH output capacity) as noted in Table 49.

Table 49 Estimated Future Hot Water Generation Output Capacity Pathway 2 (RNG) Decentralized Alternative

Location	Equipment	Heat Generation Output Capacity (MBH)	Remarks
Existing Boiler Building	New West Boilers 1, 2 and 3	4,180 each	New equipment; same capacity as existing.
SCB2	Existing East Boilers 4, 5 and 6	8,220 each	Existing equipment; no change.
Total Heat Generation Capacity:		37,200	Includes all heat generation equipment being operational.
Firm Heat Generation Capacity:		28,980	Assumes one of the largest boilers being out of service.

For Pathway 2 Decentralized Heating Alternative, the total heat generation capacity (37,200 MBH) exceeds the total hot water demand (25,070 MBH) by 12,130 MBH (32 percent excess heat). The firm heat generation capacity with one boiler offline is the same as Pathway 1 Decentralized Heating Alternative and includes 22 percent excess heat generating capacity above the cumulative total demands. The 22 percent excess heat could be changed if a different boiler manufacturer is selected. The 22 percent excess was kept to maintain boiler manufacturer consistency within this Facilities Plan.

5.4.2.3 Summary of Infrastructure, Building, and Piping Modifications

The infrastructure modifications in Pathway 2 Decentralized Heating Alternative are the same as the modifications in Pathway 1 Decentralized Heating Alternative other than the location of the West Boilers. Because the new West Boilers for Pathway 2 Decentralized Heating Alternative are similar in footprint to the existing West Boilers they can be installed within the existing Boiler Building with some modifications to the building to accommodate the new equipment. For this alternative, the new boilers will be installed

in the existing Boiler Building. The existing Boiler Building will require modifications to accommodate the new equipment. See Figure 22 for the new proposed site hot water schematic for the Pathway 2 Decentralized Heating Alternative.

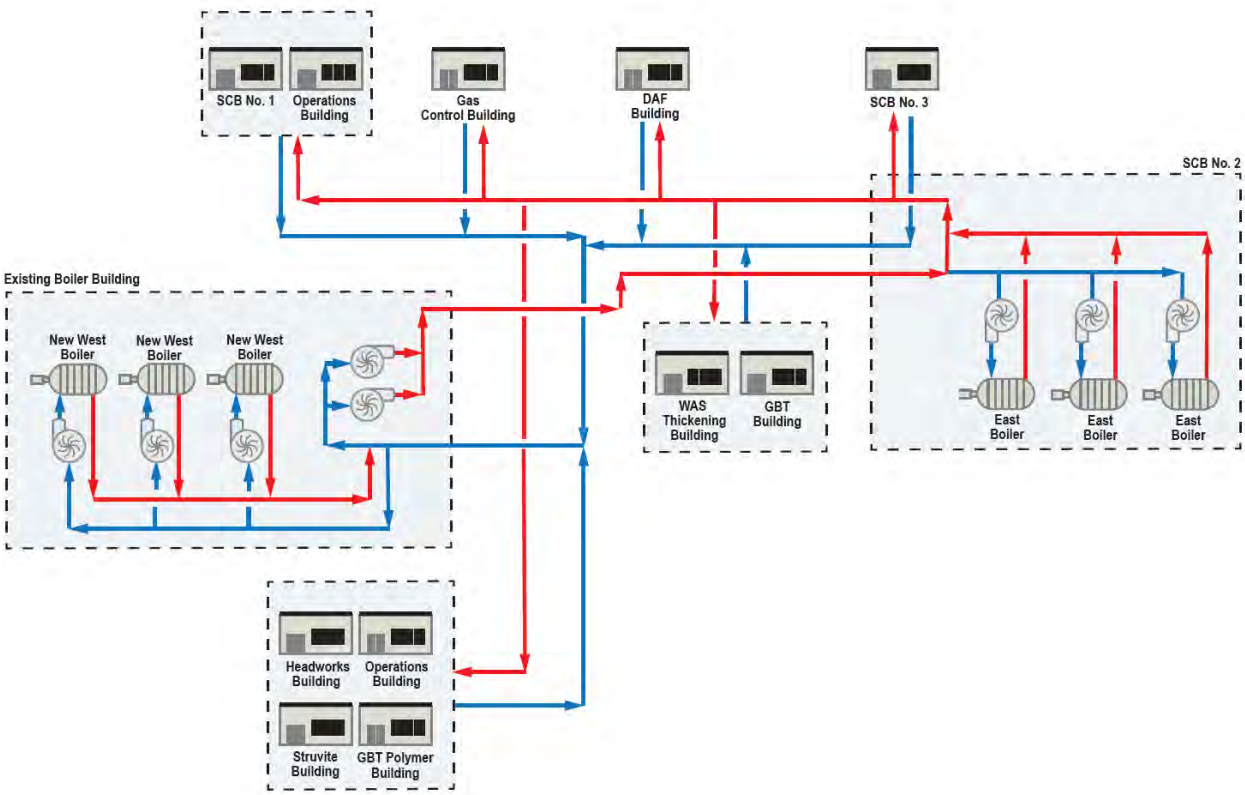

Figure 22 Proposed Future Hot Water Schematic - Pathway 2 (RNG) Decentralized Heating Alternative

5.4.2.4 GHG Emissions

Per MMSD's GHG assessment protocol, a detailed summary of the energy use and Scope 2 emissions for the Null Pathway and Pathway 2 Decentralized in 2040 are presented in Table 50.

Table 50 Design Alternatives Emissions and Energy Use Comparison Table for Pathway 2 Decentralized

Process Description	Null Pathway (2040)					Pathway 2 Decentralized (2040)				
	Operation (hr/day)	Scope 2 Emissions (MT CO_2e/yr)	Energy Used (kWh/yr)	Energy Used per MG Treated (kWh/MG)(1)	Energy Costs ($/yr)(2)	Operation (hr/day)	Scope 2 Emissions (MT CO_2e/yr)	Energy Used (kWh/yr)	Energy Used per MG Treated (kWh/MG)(1)	Energy Costs ($/yr)(2)
Biogas System	22	110	173,000	9.06	33,200	23	100	158,000	8.28	30,300

Notes:
(1) Based on a projected flow of 52.3 mgd in 2040 per Influent Flow and Loading Projections TM (2023).
(2) Based on an energy cost of $0.192/kWh per escalated rate to 2040.

Scope 2 GHG emissions are expected to remain approximately the same under Pathway 2 Decentralized as compared to the Null Pathway. However, Scope 2 emissions only account for a fraction of overall emissions. Overall emissions are dominated by Scope 1 emissions, specifically emissions from natural gas combustion. Table 51 summarizes the major GHG emissions related to the thermal heating system for Pathway 1 Decentralized, as compared to the Null Pathway.

Table 51 Pathway 2 Decentralized GHG Emissions

Source(1)	Null Pathway (2040) (MT CO_2e/yr)	Pathway 2 Decentralized (2040) (MT CO_2e/yr)
Emissions		
NG Combustion	3,100	6,200
Purchased Electricity	110	100
Total Emissions	3,210	6,300

Notes:
(1) GHG offsets are excluded from the evaluation because the thermal heating system alternatives do not provide any.

Under Pathway 2 Decentralized, Scope 1 emissions are expected to increase significantly relative to the Null Pathway due to a major increase in natural gas use for heating to compensate for the loss of the cogeneration engines and the heat previously recovered from them. Consequently, overall emissions are expected to approximately double for Pathway 2 Decentralized relative to the Null Pathway.

5.4.2.5 Capital and Life Cycle Costs

The total project cost for Pathway 2 Decentralized Heating Alternative is approximately $12 million. A summary of these costs is provided in Table 52, and a detailed project cost estimate is provided in Appendix E. This opinion of cost includes all infrastructure and building modifications as discussed in Pathway 1 Decentralized Alternative except for a new Cogeneration/Boiler Building. The construction allowances used in developing the direct costs are noted in Section 1.2.1 Capital and Life Cycle Cost Assumptions.

Table 52 Pathway 2 Decentralized Heating Alternative Project Cost

Description	Percentage	Cost
Direct Costs (includes construction allowances)		$6,789,000
General Conditions Allowance	15%	$1,018,000
Contractor Overhead and Profit	20%	$1,358,000
Bonds and Insurance	3%	$204,000
Total Construction Cost		$9,369,000
Engineering, Legal, and Administrative Fees	15%	$1,405,000
Construction Management	10%	$937,000
Total Project Cost Estimate		$11,711,000

Pathway 2 Decentralized Heating Alternative hot water system annual operation and maintenance costs include the same elements as the Pathway 1 Decentralized Alternative. Natural gas associated with Pathway 2 is higher compared with Pathway 1 because there is no heat recovery from cogeneration engines to provide supplemental heat to the hot water system. See Table 53 for the annual costs.

The NPV for Pathway 2 Decentralized Heating Alternative evaluated the costs associated with the hot water system over the estimated 20-year life of the equipment from 2029 through 2048. The project cost in Table 53 was escalated to 2028 dollars. A summary table presenting the capital cost and the average of the 20-year present worth O&M costs is shown in Table 53. Cost is expressed as NPV showing the value of the overall project in 2028 dollars. Assumptions used for the analysis are summarized in Section 1.2.1 Capital and Life Cycle Cost Assumptions.

Table 53 Pathway 2 Decentralized Heating Alternative Estimated Net Present Value

Description	Decentralized Costs
Estimated Project Cost (2028 dollars)	$12,984,000
Annual Costs	
Natural Gas Cost Hot Water System ($/yr)	$248,000
Natural Gas Cost Gas-Fired Equipment ($/yr)	$291,000
Natural Gas Cost Acid Digesters ($/yr)	$272,000
Electrical Cost ($/yr)	$22,000
Heating Hot Water System O&M Cost, ($/yr)	$34,000
Net Annual Costs, $/year	$867,000
Net Present Value ($)	$30,342,000

5.5 Heating System Evaluation Summary

Table 54 compares the project costs for the different pathways and their alternatives in 2025 dollars.

Table 54 Summary of Estimated Project Cost Comparison for Heating System Modifications

Description	Null Pathway	Pathway 1 (Cogen) Centralized Alternative	Pathway 1 (Cogen) Decentralized Alternative	Pathway 2 (RNG) Centralized Heating Alternative	Pathway 2 (RNG) Decentralized Alternative
Direct Costs (includes construction allowances)	$1,889,000	$11,448,000	$8,824,000	$11,448,000	$6,789,000
General Conditions Allowance	$283,000	$1,717,000	$1,324,000	$1,717,000	$1,018,000
Contractor Overhead and Profit	$378,000	$2,290,000	$1,765,000	$2,290,000	$1,358,000
Bonds and Insurance	$57,000	$343,000	$265,000	$343,000	$204,000
Total Construction Cost	$2,607,000	$15,798,000	$12,178,000	$15,798,000	$9,369,000
Engineering, Legal, and Administrative Fees	$391,000	$2,370,000	$1,827,000	$2,370,000	$1,405,000
Construction Management	$261,000	$1,580,000	$1,218,000	$1,580,000	$937,000
Total Project Cost Estimate (2025 dollars)	$3,259,000	$19,748,000	$15,223,000	$19,748,000	$11,711,000

Table 55 compares the calculated NPV for the different pathways and their alternatives.

Table 55 Summary of Estimated Net Present Value Comparison for Heating System Modifications

	Null Pathway	Pathway 1 (Cogen) Centralized Alternative	Pathway 1 (Cogen) Decentralized Alternative	Pathway 2 (RNG) Centralized Heating Alternative	Pathway 2 (RNG) Decentralized Alternative
Estimated Project Cost (2028 dollars)	$3,614,000	$21,895,000	$16,878,000	$21,895,000	$12,984,000
Natural Gas Cost Hot Water System ($/yr)	$406,000	$154,000	$41,000	$556,000	$248,000
Natural Gas Cost Gas-Fired Equipment ($/yr)	-	-	$140,000	-	$291,000
Natural Gas Cost Acid Digesters ($/yr)	-	$272,000	$272,000	$272,000	$272,000
Electrical Cost ($/yr)	$24,000	$48,000	$22,000	$48,000	$22,000
Heating Hot Water System O&M Cost, ($/yr)	$34,000	$34,000	$34,000	$34,000	$34,000
Net Annual Costs/(Revenues), $/year	$464,000	$508,000	$509,000	$910,000	$867,000
Net Present Value ($)	$12,907,000	$32,070,000	$27,078,000	$40,105,000	$30,342,000

Table 56 presents a summary of how each pathway and heating alternative meets the scoring criteria discussed in Section 1.2 Planning Criteria. Refer to Section 6 for the overall scoring of each heating system alternative in combination with the respective biogas alternatives.

Table 56 Review of Pathways 1 (Cogen) and 2 (RNG) Based on Decision Criteria

Category	Criteria	Pathway 1 (Cogen) Centralized Alternative	Pathway 1 (Cogen) Decentralized Alternative	Pathway 2 (RNG) Centralized Heating Alternative	Pathway 2 (RNG) Decentralized Alternative
Financial	Capital Costs	This alternative is the most expensive due primarily to the need for a new Boiler/Cogeneration building and piping costs.	Capital costs are lower than Pathway 1 Centralized Alternative due to lower site piping costs.	Similar cost to Pathway 1 Centralized Alternative.	This is the least cost alternative due primarily to the smaller boilers and ability to reuse existing infrastructure.
	Life Cycle Costs	This alternative has the benefit of capturing heat from the cogeneration engines, lowering operation costs. This is lower than the Pathway 2 lifecycle costs.	Similar to Pathway 1 Centralized Alternative. The cost is lower due to Decentralized Heating Alternative having a lower capital cost.	This is the highest lifecycle cost. This alternative does not capture any heat and has a higher operation cost.	Similar to Pathway 2 Centralized Heating Alternative. The cost is lower due to Decentralized Heating Alternative having a lower capital cost.
O&M	Operational Complexity/ Difficulty	Future operation will include a central control system for all hot water system components. Equipment serving the hot water system is familiar to MMSD. This alternative includes a larger hot water system, which requires monitoring of water chemistry and pumps for a large system.	Future operation will include a central control system for all hot water system components. Equipment serving the hot water system is familiar to MMSD.	Similar to Pathway 1 Centralized Alternative.	Similar to Pathway 1 Decentralized Alternative.
	Operational Response/ Risk/Uptime	Centralized Alternative includes more hot water generating equipment and the hot water system is more redundant compared with the Decentralized Alternative.	This alternative includes natural gas fired equipment serving buildings, which is not reliant on the hot water system.	Similar to Pathway 1 Centralized Alternative, but does not include the cogeneration engines as a heat source. Therefore, this alternative has less redundancy of hot water generating.	Similar to Pathway 2 Centralized Heating Alternative and Pathway 1 Decentralized Alternative. This alternative does not include cogeneration engines so there is less redundancy.

Category	Criteria	Pathway 1 (Cogen) Centralized Alternative	Pathway 1 (Cogen) Decentralized Alternative	Pathway 2 (RNG) Centralized Heating Alternative	Pathway 2 (RNG) Decentralized Alternative
Implementation	Future Site Flexibility	Future expansion of process-related or other infrastructure would require upsizing hot water piping and hot water pumps.	For infrastructure served by natural gas, future expansion would be easy to accommodate. Other infrastructure served by hot water would be similar to the Centralized Alternative.	Similar to Pathway 1 Centralized Alternative.	Similar to Pathway 1 Decentralized Alternative.
Other	Market Risk	Not Applicable	Not Applicable	Not Applicable	Not Applicable
	Energy Recovery	This option benefits most from the energy provided to the hot water system from the cogeneration engines.	Similar to Pathway 1 Centralized Alternative but the hot water demand is lower so there is more excess heat that is rejected.	This option does not have the benefit of energy capture from the cogeneration engine.	Similar to Pathway 2 Centralized Heating Alternative.
	Outside Dependence	If there is interruption of natural gas service to the Nine Springs Facility, the cogeneration engines will help to supplement plant hot water needs.	Similar to Pathway 1 Centralized Alternative but the gas-fired equipment will be down if the natural gas service is interrupted.	Fully dependent on outside energy sources.	Fully dependent on outside energy sources.

SECTION 6 RECOMMENDATIONS AND NEXT STEPS

6.1 Biogas and Thermal Pathway Recommendations

Findings from the biogas and plant-wide heating system evaluations were combined to inform an overall project recommendation. This section summarizes the combined project capital and life cycle costs as well as scoring for each of the alternatives in order to make an overall biogas/heating system recommendation. A detailed capital cost estimate and site layout is provided for the recommended alternative.

Table 57 shows the combined estimated project capital costs for each alternative presented in the biogas and plant-wide heating system evaluations. While the Null Pathway represents the lowest capital cost, it is not recommended due to significant maintenance requirements and inefficiencies, as well as limited capacity. As the equipment continues to age, operational risks increase, making this pathway unsuitable for long-term planning. The range of capital costs for Pathway 1 and 2 alternatives is $37 to $46 million. The Pathway 2 decentralized alternative represents the lowest capital cost.

Table 57 Combined Estimated Project Capital Cost for All Alternatives

Capital Costs					
Biogas and Hot Water Pathways	Null Pathway	Pathway 1 (Cogen) Centralized Alternative	Pathway 1 (Cogen) Decentralized Alternative	Pathway 2 (RNG) Centralized Heating Alternative	Pathway 2 (RNG) Decentralized Alternative
Biogas Capital Cost Estimate (2025 Dollars)(1)	$552,000	$26,614,000		$25,572,000	
Hot Water Capital Cost Estimate (2025 Dollars) (1)	$3,259,000	$19,748,000	$15,223,000	$19,748,000	$11,711,000
Biogas + Hot Water Capital Cost Estimate (2025 Dollars) (1)	$3,811,000	$46,362,000	$41,837,000	$45,320,000	$37,283,000

Notes:
(1) Capital costs are shown in 2025 dollars in this table.

Table 58 shows the combined annual O&M costs for each alternative presented in the biogas and plant-wide heating system evaluations. Capital costs are escalated to 2028 dollars (at an annual escalation rate of 3.5 percent) for NPV calculations, as described in TMs 4 and 5. The highest revenue potential and fastest payback is achieved with the Pathway 2 decentralized alternative.

Table 58 Combined Estimated Payback for All Alternatives

Combined NPV Costs for All Alternatives					
Biogas and Hot Water Pathways	Null Pathway	Pathway 1 (Cogen) Centralized Alternative	Pathway 1 (Cogen) Decentralized Alternative	Pathway 2 (RNG) Centralized Heating Alternative	Pathway 2 (RNG) Decentralized Alternative
Biogas O&M Annual(1)	($416,000)	($2,218,000)		($4,495,000)	
Hot Water O&M Annual(2)	$58,000	$82,000	$196,000	$82,000	$347,000
Biogas + Hot Water Annual O&M	($358,000)	($2,136,000)	($2,022,000)	($4,413,000)	(4,148,000)
Biogas + Hot Water Capital Cost Estimate (2028 Dollars)(3)	$4,226,000	$51,402,000	$46,385,000	$50,247,000	$41,336,000
Simple Payback	12 years	24 years	23 years	11 years	10 years
Total Combined Weighted Score	2.5	3.3	3.4	3.0	3.5

Notes:
(1) Values shown in parentheses are revenues.
(2) Natural gas costs for hot water and digester heating are not included to avoid double counting as they are included in biogas O&M costs. Hot water O&M costs include natural gas cost for gas-fired equipment, electricity for HVAC systems and HVAC equipment O&M.
(3) Capital costs are shown in 2028 dollars in this table for NPV calculations.

Table 59 shows the combined project quantitative scoring of decision criteria for the biogas and plant-wide heating system evaluations. Scores are provided on a scale of 1 through 5 with a higher number representing a better score. The scores were weighted based on the predetermined weighting scale as described in Section 1. The values were totalized to provide an overall score for each pathway and alternative. The Pathway 2 decentralized alternative has the highest overall decision criteria scoring.

Table 59 Combined Quantitative Scoring of Decision Criteria

Category	Criteria	Weight	Null Pathway	Pathway 1: Cogen		Pathway 2: RNG	
				Centralized	Decentralized	Centralized	Decentralized
Financial	Capital Costs (2025 $)	14%	5	2	3	2	4
	Life Cycle Costs (2028 $)	20%	1	3	3	5	5
O&M	Operational Complexity/Difficulty	14%	2	3	3	3	3
	Operational Response/Risk/Uptime	9%	1	4	5	3	4
Implementation	Future Site Flexibility	9%	2	2	3	2	3
Other	Market Risk	12%	4	4	4	2	2
	Energy Recovery	10%	2	4	3	5	5
	Outside Dependence	12%	3	5	4	1	1
Total Weighted Average			2.49	3.32	3.42	3.01	3.47

Based on the evaluation completed, each of the pathways were found to be feasible and would meet MMSD's goals. Pathway 1 (centralized and decentralized) scored better in both market risk and outside dependence, while Pathway 2 (centralized and decentralized) scored higher in life cycle costs. The Pathway 2 decentralized alternative is recommended based on having the lowest capital cost, highest revenue potential, and highest combined scoring. It is noted that this RNG/decentralized heating combination scored the highest as of the date of this Plan, however, because the project is anticipated to be several years out, these alternatives should be revisited in the future for final confirmation.

Table 60 presents a detailed estimated capital cost for the recommended Pathway 2 decentralized alternative.

Table 60 Estimated Project Capital Cost for Recommended Pathway 2 (RNG) Decentralized Alternative

Item Description	Quantity	Unit	Unit Cost	Total Cost
SUMMARY OF CONSTRUCTION COSTS				
Civil/Structure				
Sitework	1	LS	$250,000	$250,000
Gas upgrading concrete pad, 25 ft x 50 ft	93	CY	$1,000	$93,000
RNG Building Foundation, 50 ft x 50 ft	185	CY	$1,000	$185,000
RNG Building Precast Walls	1	LS	$500,000	$500,000
RNG Building Roof	2,500	SF	$60	$150,000
Biogas Equipment				
H2S Reduction System	1	EA	$550,000	$660,000
Siloxane removal system	1	EA	$350,000	$420,000
Gas Upgrading System	1	EA	$3,060,000	$3,672,000
Gas Chromatograph	1	EA	$100,000	$120,000
Thermal Equipment				
West Boilers	3	LS	$300,000	$900,000
Hot Water Pumps	6	LS	$15,000	$90,000
HVAC Equipment (Make-up Air Units, Unit Heaters, etc.)	1	LS	$650,000	$650,000
Subtotal Equipment and itemized Direct Costs				$7,690,000
ALLOWANCE FOR CONSTRUCTION SERVICES				
Structural/Architectural Allowance				$510,000
Mechanical System Allowance (HVAC, Plumbing, etc.)				$920,000
Electrical, I&C, Programming allowance				$2,169,000
Piping/Valve Allowance				$2,225,000
Site Piping (Natural Gas and Hot Water)				$1,400,000
Start-up and Commissioning Allowance				$150,000
Subtotal				$15,064,000
Construction Contingency	30%			$4,520,000
Subtotal Direct Cost				$19,584,000
CONTRACTOR MARKUPS, TAXES, AND ESCALATION				
General Conditions Allowance	15%			$2,937,000
Contractor Overhead and Profit	20%			$3,917,000
Bonds and insurance	3%			$588,000
Total Construction Cost				$27,026,000
TOTAL PROJECT COST ALLOWANCES (NON-CONSTRUCTION)				
Engineering, Legal and Administrative fees	15%			$4,054,000
Construction Management	10%			$2,703,000
MGE Interconnect Facility	1	LS	$3,500,000	$3,500,000
Total Project Cost Estimate				$37,283,000

Figure 23 presents the site layout for recommended Pathway 2 decentralized alternative.

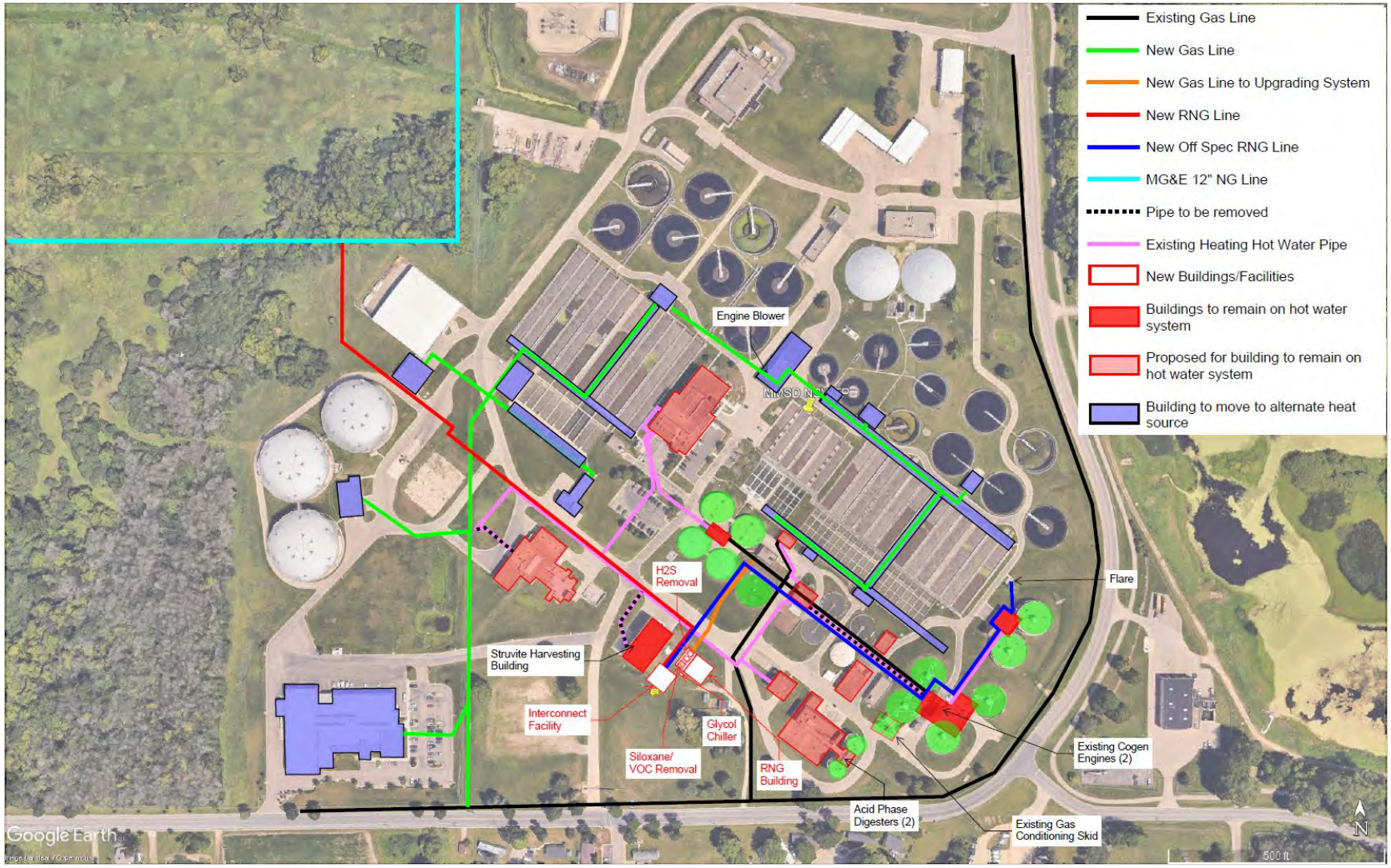

Figure 23 Pathway 2 (RNG) Decentralized Alternative Combined Site Layout

6.2 Updated Envision™ Pre-Assessment

A preliminary Envision™ v3 Pre-Assessment Checklist was reviewed for the recommended RNG/decentralized project as an exercise for assessing the project's sustainability and resilience within the Envision™ framework. A conservative approach was taken in assessing MMSD's implementation approach of the project. There are numerous opportunities to increase the number of possible points for nearly all the Envision™ categories, warranting further exploration as the planning/design is refined, which are described in TM 6.

The total number of eligible points for the project was determined to be 270 out of 790 applicable points (34 percent), making the project eligible for a possible Silver award level. If MMSD pursues more aggressive sustainability and resilience measures such as incorporating recycled material requirements, sustainable procurement practices, etc., the possible award level could increase.

6.3 Greenhouse Gas Emissions

6.3.1 Scope 2

GHG emissions are typically categorized as Scope 1, Scope 2, or Scope 3. Scope 1 includes direct anthropogenic (fossil fuel based) and biogenic GHG emissions related to on-site combustion and treatment processes within the system boundary. Scope 2 encompasses indirect anthropogenic emissions related to the consumption of purchased electricity, steam, heating, or cooling. All other (non-Scope 2) indirect anthropogenic GHG emissions that result from treatment operations are considered Scope 3 emissions, such as the production and the transport of chemicals. Scope 1 emissions such as direct emissions from treatment processes, fuel combustion, and fleet vehicles, are not as easily tracked or measured as Scope 2 emissions. Therefore, per MMSD's GHG assessment protocol, Scope 2 emissions are an area of focus and following its guidelines, a detailed summary of the energy use and Scope 2 emissions for the baseline and future scenario under Pathway 2 - Decentralized are presented in Table 61. The GHG footprint under Pathway 2 - Decentralized is expected to increase, in part, due to the considerable increase in purchased electricity.

Table 61 Design Alternatives Emissions and Energy Use Comparison Table for Pathway 2 - Decentralized

Process Description	Null Pathway (2040)					Pathway 2 - Decentralized (2040)				
	Operation (hr/day)	Scope 2 Emissions (MT CO_2e/yr)	Energy Used (kWh/yr)	Energy Used per MG Treated (kWh/MG)(1)	Energy Costs ($/yr)(2)	Operation (hr/day)	Scope 2 Emissions (MT CO_2e/yr)	Energy Used (kWh/yr)	Energy Used per MG Treated (kWh/MG)(1)	Energy Costs ($/yr)(2)
Biogas System	22	650	1,030,000	54	197,000	23	2,300	3,620,000	190	695,000

Notes:
(1) Based on a projected flow of 52.3 mgd in 2040 per Influent Flow and Loading Projections TM (2023).
(2) Based on an energy cost of $0.192/kWh per escalated rate to 2040.

6.3.2 Scope 1 and Overall Emissions

Since all biogas will be sent for upgrading and RNG injection, the resulting increase in natural gas consumption for heating is expected to substantially increase Scope 1 emissions and increase overall emissions even more significantly. Table 62 summarizes the major GHG emissions and offsets related to Pathway 2 - Decentralized as compared to the Null Pathway.

Table 62 Pathway 2 - Decentralized GHG Emissions and Offsets Compared to the Baseline

Source	Null Pathway (2040) (MT CO_2e/yr)	Pathway 2 -Decentralized (2040) (MT CO_2e/yr)
Emissions		
Biogas Combustion(1)	60	0
NG Combustion	3,100	8,500
Purchased Electricity (Parasitic)	650	2,300
RNG Combustion(1)	--	600
Tail Gas Venting(1)	--	530
Offsets		
Electrical & Thermal Energy	(12,500)	--
Diesel	--	(10,200)
Emissions Summary		
Total Emissions	3,700	11,900
Total Offsets	(12,500)	(10,200)
Net Emissions	(8,800)	1,700

Notes:
(1) Excludes biogenic CO_2, which is considered carbon neutral and not required for reporting.

Although the emissions from biogas combustion go to zero under Pathway 2 – Decentralized, the GHG benefit to Scope 1 emissions are negligible when compared to the Null Pathway because the CO_2 emissions, the greatest source of emissions from biogas combustion, are biogenic and excluded from the calculation. Instead, Scope 1 emissions are dominated by natural gas combustion, more than doubling its emissions contribution as compared to the Null Pathway, to compensate for all the biogas getting sent for RNG upgrading, as well as additional natural gas use for decentralized heating of buildings not served by the main hot water loop. Furthermore, under Pathway 2 – Decentralized, Scope 1 emissions sources are added to account for the emissions from the combustion of RNG and the venting of tail gas from the biogas upgrading system. However, both additional emissions sources modestly contribute to overall emissions when excluding biogenic CO_2 emissions, as the tail gas is primarily composed of CO_2.

Biogas upgraded to RNG is chemically equivalent to conventional natural gas, and when exported off-site, it will be combusted elsewhere. The economic analysis in later sections assumes use as vehicle fuel. The system boundaries for the GHG analysis extend beyond the plant to include off-site combustion, capturing both the GHG offset and added emissions from the beneficial use of RNG. The GHG benefit, though, far outweighs any additional combustion emissions. The production of RNG to offset vehicle fuel (through injection into the pipeline) is expected to almost completely offset GHG emissions.

6.4 Permitting

The Carollo/Strand team and MMSD staff met with the WDNR on September 5, 2025, to discuss potential impacts of the recommended alternative on the existing air permit. The NSWTP is currently a synthetic minor source and Dane County is considered in attainment for all criteria pollutants. NSWTP will remain a minor source so long as they remain below 50 tons per year carbon monoxide and nitrous oxide emissions. The WDNR was not aware of any upcoming rule changes that would apply to NSWTP's permit.

Because this project will remove existing emissions sources and add new emissions sources, revised facility-wide calculations will be required. The WDNR will conduct dispersion modeling. As a conservative estimate, it was suggested to allow 9 to 12 months from initial application to permit issuance. The recommended alternative is anticipated to reduce on-site emissions, so there is not anticipated to be an issue with the revised facility-wide calculations or dispersion modeling.

6.5 Project Delivery Evaluation

Because biogas to RNG projects can provide a revenue stream, this opens the door to unique financing approaches for the combined RNG and thermal improvements project, such as third-party financing (i.e., public private partnerships). In addition to financing options, alternative procurement and project delivery options are also being considered by several WRRFs, as described below.

6.5.1 Design-Bid-Build with Early Equipment Procurement

The traditional design-bid-build (DBB) project approach is a well-proven model that most utilities, including MMSD, use and are comfortable with. While this option represents the longest overall project duration due to the three separate phases, early procurement of the biogas upgrading equipment can be used to shorten the schedule. Biogas upgrading equipment has long lead times, typically greater than 50 weeks, which can significantly extend the DBB schedule. Early procurement of the equipment by the Owner during the design phase can reduce the overall project schedule. The equipment can then be assigned to the contractor during the construction phase. This approach provides the owner with the maximum amount of project control, while some additional risk is assumed with respect to equipment coordination, delivery schedules, and similar concerns.

6.5.2 Design-Build

In a design-build (DB) delivery model, the WRRF holds one contract with a design and construction team. The team executes the technical design documents, equipment procurement, and construction services. In addition to the DB team, the WRRF may choose to hire an Owner's Advisor to assist with procurement, contract management, and technical input. The main benefit of the DB delivery model is the accelerated project schedule, due to elimination of the bidding phase and overlap of the design and construction processes. This reduces the time to market, which ultimately speeds up the payback of the project cost.

The Dane County Landfill RNG Project was delivered as a design-build project where BIOFerm Energy Systems designed, installed, commissioned, and provided technology for the biogas upgrading facility at Dane County's landfill.

6.5.3 Third-Party Financed Design-Build

The DB delivery model can be paired with third party financing, which is a relatively less used financing method for WRRF projects, but is gaining traction for biogas to RNG projects. In this financing method, an agreement is formed between the WRRF and a third-party developer such that the developer covers the financing and the WRRF is provided a royalty or lease payment for the duration of the contract. The third-party entity could be a private equity firm, an equipment provider, energy company, or natural gas utility. The third-party developer and WRRF agree to contract terms, including length of contract (typically 10 to 20 years), contractual obligations (such as biogas quality and system up-time), and pricing structure (i.e. how the revenue is shared between the two entities).

Third-party financing can reduce the time to market as the WRRF is not required to secure funding and allows the WRRF to transfer significant project risk to the developer/DB team. The disadvantage of the DB delivery model, especially if third-party financing is used, is reduced owner control and a reduction in long-term revenue since the third-party developer is sharing in the revenue stream. Another consideration is that, for many WRRFs, third-party financing is a new contracting method. As such, it may require additional time and resources to develop a contract that all parties can agree to.

6.6 Project Schedule

The following timelines are estimated for a project of this magnitude (conservatively assuming a Design-Bid-Build delivery approach):

- Preliminary Design: 6 months.
- Final Design: 15 months.
- Bidding and Award: 3 months.
- Construction: 36 months.
- Total: 60 months (5 years).

As summarized above, after completion and approval of this Facilities Plan, it is estimated that it will take five years to complete the project.

6.7 Next Steps

The following next steps are recommended when MMSD decides to move forward with the project:

1. Commence Preliminary Design to verify the biogas utilization approach and project delivery method.
2. Coordinate with the WDNR on the revised air permit requirements.
3. Proceed with final design/bidding/construction.

SECTION 7 COST EFFECTIVENESS AND FISCAL IMPACT COST ANALYSIS

It is anticipated that the project will be funded primarily with a Clean Water State Revolving Fund (CWSRF) loan from the State of Wisconsin. The current 20-year loan interest rate, based on 55 percent of the market rate, is 2.475 percent. Loans terms longer than 20 years (up to 30 years) are available and have marginally higher interest rates. The Wisconsin Department of Administration may update interest rates quarterly. As part of the Clean Water Fund loan program, WDNR requires the submission of a "facilities plan" that should have both a cost-effectiveness analysis and a fiscal impact cost analysis. The fiscal cost analysis will consider grant or loan assistance, financing arrangements, and provide estimates of expected user charges or fees (which should include any existing indebtedness). The analysis below provides the parallel cost ratio and the estimate of expected user charges. A Business Case Evaluation for the recommended alternative is provided in Appendix G.

7.1 Parallel Cost Ratio

The project generally includes replacement of equipment because of age and condition as well as new equipment and associated structures. The combined capital cost table presented earlier shows equipment and construction costs required for the recommended alternative, i.e., Pathway 2 Decentralized, based on equipment sized for the next 20 years. The cost of the biogas system improvements remains unchanged when evaluated at 10 years post-construction compared to the 20-year analysis conducted for this project. This is because the gas upgrading system would be the same size for both the 10-year flows and 20-year flows. The cost associated with the heat improvements does not change either when reviewing costs 10 years out compared to 20 years out because the size of the equipment does not change. The boilers and natural gas mains are sized to handle the building and process heat demands of the system. The building heat demand is sized for the ventilation and envelope loads on the coldest days of the year and the process loads is the maximum heat demand for the process demands. Since there are no definable changes in the anticipated project costs, the parallel cost ratio is calculated to be 1.0 (100 percent).

7.2 Fiscal and User Charge Impacts

The estimated impact of this project on MMSD's user charge system is $13.91 per year for an average residential user of wastewater service. This impact would be applicable to the year 2030, when the first loan repayment for the project would be due and would be incorporated into MMSD's rate structure.

As a wholesale provider of wastewater treatment services, households in MMSD's service area do not pay MMSD directly for sewer utility services. Instead, MMSD bills municipalities in the service area based on their relative utilization of MMSD's wastewater treatment services, and those municipalities in turn bill residential, commercial, and industrial users. However, MMSD can estimate the impact of this project's costs on user charges for an average residence. MMSD's user charge rate structure includes seven different parameters, reflecting wastewater flow, strength, and community population as shown in Table 63 below.

Table 63 Annual MMSD-only Charges With and Without Project Costs

Annual MMSD-only Charges on Average Residence, With and Without Heat and Power Project Costs								
	Volume	CBOD	Suspended Solids	Nitrogen	Phosphorus	Actual Customers	Equivalent Meters	Total
A: With Project Costs	$109.71	$31.59	$56.99	$21.33	$27.74	$75.00	$62.33	$384.69
B: Without Project Costs	$105.17	$30.90	$55.43	$20.80	$27.02	$74.36	$57.09	$370.78
C = A-B: Charges attributable to project								$13.91

Note:
CBOD - carbonaceous biochemical oxygen demand.
(1) Rates are estimated values for 2030, the planned first year of loan repayment for this project. Difference in rates is not affected by the assumed first year of loan repayment.

An average residence would pay $384.69 per year in 2030 with costs related to this project in MMSD's budget. If this project was not completed, the average annual charge would be reduced to $370.78 in 2030. As such, the annual charge on an average residence attributable to this project is the difference to those two numbers, $13.91. It should be noted that the average residence would also be subject to additional sewer charges from their local municipality, which are not reflected in this table.

7.3 Environmental Impacts

Proposed changes to WDNR rules (NR 439 and NR 410) may impact MMSD by modernizing compliance requirements. The only environmental impact aspect for this project is air emissions. New engines will have lower emission factors than existing engines due to recent regulations such as NSPS. Any upgrades or changes will require coordination with WDNR, including potential construction and operation permit modifications and air dispersion modeling for compliance with air quality standards. Due to the facility's classification as a synthetic minor source air permit, emissions are capped at 200,000 lb/year for any criteria pollutants. If emissions rise above this threshold, MMSD would need to apply for a revised air permit as a major source.

Changes to the facility's design flow or service water usage are not anticipated. As the biogas and thermal system upgrades will occur entirely on site and do not include significant excavation, no impacts to groundwater, soil, or other nearby environmental resources are expected. Similarly, the project is not anticipated to affect local flora, fauna, or other natural areas. The considerations for each pathway in the biogas system are described below:

7.3.1 Pathway 1 (Cogeneration)

Pathway 1 would require a revision of the facility's air permit to remove the existing biogas-driven blower and reciprocating engines and add the new engines. The existing flare is required to combust the biogas when the engines are offline, hence, would remain on the permit. Boiler modifications would also need to be included in any revisions.

Under Pathway 1, scope 2 emissions are expected to increase due to greater electricity demand from the new cogeneration system. However, the overall GHG footprint is expected to improve due to the improved electrical and thermal efficiency of the new engine generators compared with the existing.

Scope 1 emissions were also expected to increase, but the GHG calculation excludes biogenic carbon dioxide (CO_2), which is considered carbon neutral and was not considered for reporting requirements. The impacts for Scope 2 GHG emissions from purchased electricity under Pathway 1 and the major GHG emissions and offsets related to the biogas system are summarized in TM 4.

7.3.2 Pathway 2 (RNG)

Pathway 2 requires maintaining the existing waste gas flare on the air permit, as it would be required to combust the biogas when the biogas upgrading system is offline for maintenance. The air permit would need modification to remove the existing CHP engines and biogas-driven blower and add a new emission source for the tail gas. If required by the local air emissions agency, the tail gas can be treated using a regenerative thermal oxidizer before being discharged to atmosphere to combust trace methane into CO_2.

Pathway 2 is likely to increase the GHG footprint, in part, due to the considerable increase in purchased electricity. Since all biogas is upgraded for RNG injection, the resulting increase in natural gas consumption for heating is expected to substantially increase Scope 1 and overall emissions. TM 4 summarizes the major GHG emissions and offsets related to the biogas system for Pathway 2.

APPENDIX A

TECHNICAL MEMORANDUM 1 - DECISION-MAKING CRITERIA, ENVISION™ ROADMAP, GREENHOUSE GAS AND ENERGY BASELINE

Madison Metropolitan Sewerage District

Heat and Power Improvements Facilities Plan

TECHNICAL MEMORANDUM 1

Decision-Making Criteria, Envision™ Roadmap, Greenhouse Gas and Energy Baseline

FINAL / December 2024

Madison Metropolitan Sewerage District

Heat and Power Improvements Facilities Plan

TECHNICAL MEMORANDUM 1

Decision-Making Criteria, Envision™ Roadmap, Greenhouse Gas and Energy Baseline

FINAL / December 2024

Digitally signed by Lindsey I. Busch
Contact Info: Carollo Engineers Inc.
Date: 2025.01.02 12:58:03-06'00'

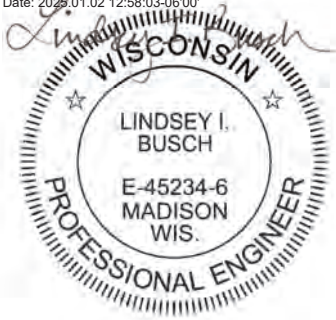

Contents

TM 1 DECISION-MAKING CRITERIA, ENVISION™ ROADMAP, GREENHOUSE GAS AND ENERGY BASELINE

1.1 Introduction 1-1
1.1.1 Project Background and Scope 1-1
1.1.2 Objectives of this Technical Memorandum 1-3
1.1.3 Summary of Previous Energy Management Efforts 1-3
1.2 Permitting Requirements 1-3
1.2.1 Current Air Permit Requirements 1-3
1.2.2 Air Emissions Regulatory Considerations 1-5
1.3 Envision™ Roadmap 1-6
1.4 Criteria Selection and Prioritization for Business Case Evaluation 1-7
1.4.1 Overview of Criteria Considered and Selected Priority Criteria 1-7
1.5 Energy Baseline 1-9
1.5.1 Introduction 1-9
1.5.2 Electric Power Use 1-13
1.5.3 Biogas and Natural Gas Use 1-14
1.6 Greenhouse Gas Emissions Baseline 1-14
1.7 Summary and Next Steps 1-15

Tables

Table 1.1 NSWTP Air Emissions Equipment 1-4
Table 1.2 Average NSWTP Air Emissions from 2015 through 2019 1-4
Table 1.3 Decision-Making Criteria Considered and Associated Score 1-7
Table 1.4 Summary of Final Decision-Making Criteria 1-8
Table 1.5 Comparison of Purchased Energy Types at NSWTP 1-12
Table 1.6 Current Electrical Use Summary by Treatment Area 1-14
Table 1.7 Updated GHG Baseline in Metric Tons of Carbon Dioxide Equivalents per Year 1-15

Figures

Figure 1.1 NSWTP Annual Electrical Energy Use 1-10
Figure 1.2 Pump Station Annual Electrical Energy Use Summary 1-10
Figure 1.3 NSWTP Annual Thermal Energy Use Summary 1-11
Figure 1.4 Typical Wastewater Treatment Plant Energy Use and Energy Use at NSWTP 1-13

Abbreviations

2020 EMMP	2020 Energy Management Master Plan
BACT	Best Available Control Technology
bhp	boiler horsepower
Btu	British thermal units
Carollo	Carollo Engineers
cfd	cubic feet per day
CHP	Combined Heat and Power
CO	Carbon monoxide
CO_2e	carbon dioxide equivalents
GHG	greenhouse gas
GPT	Green Power Tomorrow
hp	horsepower
kwh	kilowatt hour
kWh/day	kilowatt hours per day
kWh/MG	kilowatt hours per million gallons
lb(s)	pound(s)
lb/year	pounds per year
MG&E	Madison Gas and Electric
mgd	million gallons per day
MMBtu	million Btu
MMBtu/kWh	million Btu per kilowatt hour
MMBtuh	metric million British thermal units per hour
MMSD	Madison Metropolitan Sewerage District
MT	metric ton
MWh	megawatt hour
NO_x	nitrogen oxide
NSPS	New Source Performance Standards
NSWTP	Nine Springs Wastewater Treatment Plant
O&M	operation and maintenance
Project	Heat and Power Improvements Facilities Plan
RER	Renewable Energy Rider
RNG	Renewable natural gas
Strand	Strand Associates, Inc.
TM	Technical Memorandum
USEPA	United States Environmental Protection Agency
UV	Ultraviolet
WDNR	Wisconsin Department of Natural Resources
WS	workshop

TM 1 DECISION-MAKING CRITERIA, ENVISION™ ROADMAP, GREENHOUSE GAS AND ENERGY BASELINE

1.1 Introduction

1.1.1 Project Background and Scope

The purpose of the Heat and Power Improvements Facilities Plan (Project) is to identify and evaluate how to address aging heat and power infrastructure concerns at the Nine Springs Wastewater Treatment Plant (NSWTP) through rehabilitation, replacement, or change. The heat and power infrastructure is related to the following:

- Distribution and utilization of biogas.
- Generation of thermal energy.
- Distribution of thermal energy.

The primary focus of this Project is to compare replacement of NSWTP's existing cogeneration engines with new, higher-efficiency engine generators versus further upgrading the raw biogas to renewable natural gas (RNG) quality for pipeline injection. The chosen alternative paired with the accompanying thermal-side improvements will position the Madison Metropolitan Sewerage District (MMSD) to use its biogas more efficiently and improve the operation of the thermal systems.

The Project scope is broken down into four main phases with major tasks per phase as follows:

- Phase 1: Project Initiation:
  - Achieve consensus on decision-making criteria.
  - Review the energy and greenhouse gas (GHG) emission baselines from the 2020 Energy Management Master Plan (2020 EMMP) and amend as needed.
  - Develop biogas and thermal demand projections for current and future conditions while accounting for various alternative future scenarios and considerations.
  - Conduct existing infrastructure evaluation.
- Phase 2: Biogas Evaluation:
  - Evaluate and compare the following biogas pathways: null (no change), cogeneration, and RNG production.
  - Null Pathway:
    - Assumes existing operation with no major changes. Existing cogeneration engines, engine blower, and hot water infrastructure remain in use with regular maintenance and rebuilds as needed.
    - Evaluate the current and projected future energy impacts using the biogas projections in Phase 1.

  - Cogeneration and RNG Pathways:
    - Recommend a base case technology selection.
    - Review the impacts to existing infrastructure.
    - Evaluate impacts to the NSWTP air permit.
    - Conduct a triple-bottom-line style business case evaluation that accounts for social, environmental, and financial factors.

- Phase 3: Plant-wide Heating System Evaluation:
  - Evaluate and compare the following plant-wide heating alternatives: null (no change), cogeneration, and RNG production.
  - Develop flow diagrams and summarize capacities and demands for the existing plant-wide heating hot water system.
  - Null Pathway:
    - Evaluate the current and projected future energy impacts using the biogas projections in Phase 1.
  - Cogeneration Pathway:
    - Evaluate two heating alternatives and their impacts on the NSWTP hot water system based on the technology and sizing selected in Phase 2:
      - Alternative 1: Centralized Hot Water System - Centralized cogeneration heat recovery with supplemental boilers.
      - Alternative 2: Decentralized Heating - Cogeneration heat recovery for digester heat loads plus decentralized heating systems to meet other NSWTP heating needs.
  - RNG Pathway:
    - Evaluate two heating alternatives and their impacts on the NSWTP hot water system:
      - Alternative 1: Centralized hot water system with new boilers.
      - Alternative 2: Decentralized heating system with equipment located near thermal demands.
  - Cogeneration and RNG Pathways:
    - Review the impacts to existing infrastructure.
    - Evaluate impacts to the NSWTP air permit.
    - Conduct a triple-bottom-line style business case evaluation that accounts for social, environmental, and financial factors.

- Phase 4: Facilities Plan Development:
  - Provide recommendations pertaining to the biogas use and corresponding plant-wide heating system modifications.
  - Update the energy baseline based on the recommended alternative.
  - Conduct project delivery evaluation.
  - Develop the Facilities Plan which will summarize findings from Phases 2 and 3 and describe the capital improvements required for the recommended alternative.

1.1.2 Objectives of this Technical Memorandum

This Technical Memorandum (TM) documents the decision-making criteria, permitting requirements, Envision™ roadmap, and GHG and energy baseline for the Project. The decision-making criteria were defined and established at the Kickoff and Visioning Workshop (WS) 0/1 held at the outset of this Project on July 8, 2024, with MMSD staff, Strand Associates, Inc. (Strand), and Carollo Engineers Inc., (Carollo). Section 1.3 summarizes the criteria development process and the decision criteria chosen for use in the business case evaluations. The permitting requirements and GHG and energy baselines from the 2020 EMMP were reviewed and updated based on current information and to capture any relevant changes since the 2020 EMMP was produced.

1.1.3 Summary of Previous Energy Management Efforts

MMSD is an energy conscious organization that values sustainability and has incorporated sustainable practices, including resource recovery, conservation, and energy efficiency in its operations. The last dedicated MMSD energy study (2020 EMMP) was conducted in 2020, led by Carollo in association with Strand.

The 2020 EMMP set out to identify and evaluate alternatives intended to upgrade or replace energy-producing and energy-consuming infrastructure at NSWTP, and in doing so, explore ways to improve operations and reduce its energy-use footprint. The 2020 EMMP identified two alternatives to be carried forward that address aging infrastructure concerns, while advancing energy goals:

- **Enhanced Baseline Alternative:** Maintain operational philosophy with a combined heat and power system that is upgraded with new, higher efficiency cogeneration engines to improve system reliability and efficiency.
- **Reduced Infrastructure Complexity Alternative:** Simplify MMSD's infrastructure by converting the energy producing infrastructure from a combined heat and power system to a biogas upgrading and compression system for pipeline injection of RNG.

The 2020 EMMP served to identify and prioritize targeted improvements to the NSWTP's aging energy infrastructure and energy-management approaches over the next 10 to 20 years. As a high-level guidance document, the 2020 EMMP functions as a foundation for future facility planning efforts to build off its findings and further evaluate the recommended alternatives to determine a definitive path forward.

1.2 Permitting Requirements

The following section discusses the current and potential future air permitting requirements that could impact the alternative analysis.

1.2.1 Current Air Permit Requirements

1.2.1.1 Existing Air Emissions Equipment

MMSD's current air permit outlines air pollution compliance requirements for emissions equipment at NSWTP. The main emissions equipment specifically addressed in the air permit are shown in Table 1.1, with other numerous and relatively insignificant emissions units not included.

Table 1.1 NSWTP Air Emissions Equipment

Air Permit Identification	Fuel	Air Permit Description(1)(2)
Process P10	Not Applicable	Anaerobic Digesters with Biogas Treatment System
Process P08	Biogas	Waste Gas Flare
Boiler B01	Biogas and Natural Gas	East Boilers (Three 8.0 MMBtuh Hot Water Boilers)
Boiler B02	Biogas	West Boilers (Three 4.18 MMBtuh Hot Water Boilers)
Boiler B03	Natural Gas	Bryan Boilers (Three 1.45 MMBtuh Hot Water Boilers)
Process B04	Biogas	Biogas Fired Engine Generators (Two 580 bhp Waukesha Engines)
Process B05	Biogas	Blower Engine (One 580 bhp Waukesha Engine)
Boiler B06	Biogas and Natural Gas	Fulton Boilers (Four 8.0 MMBtuh Steam Boilers)
Process P06	Not Applicable	Wastewater Treatment Plant Operations (Fugitive Emissions)
Process P11	Diesel	Emergency Generator (402 hp Diesel Fired Engine)
Process P18	Diesel	Emergency Generator (2010 hp Diesel Fired Engine)

Notes:
Abbreviations: bhp - boiler horsepower; hp - horsepower; MMBtuh – metric million British thermal units per hour.
(1) Emissions are not reported for the anaerobic digesters, waste gas flare, and emergency generators.
(2) Process B05 (blower engine) will be eliminated in the future.

1.2.1.2 Existing Air Pollution Control Equipment

Emissions of formaldehyde from the biogas blower engine (Process B05) must be controlled using an oxidation catalyst according to MMSD's air permit, which was determined to be the Best Available Control Technology (BACT) for this engine. The required BACT for the two biogas fired engine generators includes maintenance activities such as oil changes, spark plug inspections, and inspections of belts and hoses.

1.2.1.3 Current Air Emissions and Limitations

MMSD must estimate air emissions from NSWTP and report this data on an annual basis to the Wisconsin Department of Natural Resources (WDNR) Air Management Program. Emissions are calculated for all major emissions equipment using standard emission factors and data from stack testing when available. Carbon monoxide (CO) and nitrogen oxide (NO_x) have facility-wide permit limitations of 198,000 pounds per year (lb/year) for each of these pollutants. A summary of the average air emissions reported in the Air Emissions Inventory Summary Reports from 2015 through 2019 for CO and NO_x is shown in Table 1.2.

Table 1.2 Average NSWTP Air Emissions from 2015 through 2019

Air Permit Identification	Air Permit Description(1)(2)	CO Emissions (lb/year)	NOx Emissions (lb/year)
Process P08	Waste Gas Flare	3,700	300
Boiler B01 (Biogas and Natural Gas)	East Boilers (Three 8.0 MMBtuh Hot Water Boilers)	1,100	1,300
Boiler B02 (Biogas)	West Boilers (Three 4.18 MMBtuh Hot Water Boilers)	1,600	1,100
Boiler B03 (Natural Gas)	Bryan Boilers (Three 1.45 MMBtuh Hot Water Boilers)	400	500

Air Permit Identification	Air Permit Description(1)(2)	CO Emissions (lb/year)	NOx Emissions (lb/year)
Process B04 (Biogas)	Biogas Fired Engine Generators (Two 580 bhp Waukesha Engines)	43,000	91,300
Process B05 (Biogas)	Blower Engine (One 580 bhp Waukesha Engine)	5,900	26,500
Boiler B06 (Biogas and Natural Gas)	Fulton Boilers (Four 8.0 MMBtuh Steam Boilers)	1,900	1,800
Total		57,600	122,800

Notes:
(1) Emissions are not reported for the anaerobic digesters, waste gas flare, and emergency generators.
(2) Process B05 (blower engine) will be eliminated in the future.

1.2.2 Air Emissions Regulatory Considerations

1.2.2.1 Existing Air Emissions Capacity

As shown in Table 1.2, NO_x emissions average approximately 122,800 lb/year, which is about 62 percent of the allowable NO_x emissions (198,000 lb/year) under MMSD's current air permit. The majority of NO_x emissions, and pollutant emissions in general, are generated from the biogas blower engine and biogas engine generators. The CO and NO_x emissions limitations in MMSD's current air permit are due to the facility's classification as a synthetic minor source, meaning that emissions are capped below the major source threshold of 200,000 lb/year for any criteria pollutant (CO, NO_x, sulfur dioxide, lead, ozone, and particulate matter). If emissions are anticipated to increase to levels at or above the major source threshold, MMSD will need to apply for a revised air permit as a major source, resulting in higher permit fees and different federal compliance requirements.

1.2.2.2 Future Air Pollution Regulatory Considerations

Proposed WDNR air permitting rule changes that could impact MMSD are as follows:

- Proposed NR 439 modifications: This proposed change simplifies, reduces, and modernizes the requirements regarding inspection, monitoring, testing, reporting, recordkeeping, and compliance demonstration. The changes also remove inconsistencies between the state and federal rules that have accumulated over time due to federal rule revisions.
- Proposed NR 410 changes: This proposed change increases the fees for reviewing construction permit applications and exemption determination requests. This is necessary for the Air Management Program to perform its duties in accordance with requirements and deadlines. This impacts owners of wastewater plants due to the expense of applying to air permits and exemption requests.

Additionally, any changes to emissions equipment at NSWTP will result in changes to the facility wide emissions. New equipment such as internal combustion engines may have lower emission factors than existing equipment due to recent regulations such as New Source Performance Standards (NSPS). NSPS are federal standards required by the Clean Air Act that apply to specific categories of stationary sources.

Changes such as accepting high-strength waste for codigestion will have an impact on air emissions. Both the biogas quantity and quality will be impacted by hauled in loadings. Biogas analysis is recommended during any pilot testing of high-strength waste codigestion to determine any changes in methane,

hydrogen sulfide, oxides of nitrogen, and siloxane content. Conversion to all thermophilic digestion would have similar considerations on air permitting due to additional biogas production. Implementing pipeline quality gas treatment would also impact air emissions due to the potential need for a thermal oxidizer for off-gas and the higher demand of natural gas for heating.

1.2.2.3 Future Air Permit Modifications

Air permitting requirements should be reviewed in detail and coordinated with the WDNR when proposing modifications to existing emissions equipment or construction of new emissions equipment. In general, an air pollution control construction permit will be required for the projects considered herein along with a revised operation permit. Future air permit modifications may require air dispersion modeling to demonstrate compliance with ambient air quality standards.

1.3 Envision™ Roadmap

Envision™ is a framework for assessing sustainability and resilience in infrastructure that sets standards and defines metrics for what constitutes sustainable infrastructure. The framework provides a flexible system of criteria and performance objectives to aid decision makers and help Project teams identify sustainable approaches during planning, design, and construction that will continue throughout the Project's operations and maintenance and end-of-life phases. Overall, 64 credits are defined under this program to assess projects in five categories, including the quality of life, leadership, resource allocation, natural world, and climate and resilience.

Note that the Envision™ process is not intended to be used for planning. Considering Envision™ in this Project aids in identifying alternatives that could result in additional achievements in the Envision™ framework. Detailed use of Envision™ may occur at the specific project development stage.

Specific to energy, Envision™ defines the following criteria under the categories "Resource Allocation" and "Climate and Resilience":

Energy:

- Reduce Operational Energy Consumption.
- Reduce Construction Energy Consumption.
- Use Renewable Energy.
- Commission and Monitor Energy Systems.

Emissions:

- Reduce Net Embodied Carbon.
- Reduce Greenhouse Gas Emissions.
- Reduce Air Pollutant Emissions.

Resilience:

- Avoid Unsuitable Development.
- Assess Climate Change Vulnerability.
- Evaluate Risk and Resilience.

- Establish Resilience Goals and Strategies.
- Maximize Resilience.
- Improve Infrastructure Integration.

Envision™ also defines assessment criteria specifically for establishing sustainability management plans that can serve as a relevant reference for the execution of this Project. The related Envision™ credits include:

- Provide effective leadership and commitment.
- Foster collaboration and teamwork.
- Plan for long-term monitoring and maintenance.
- Plan for end-of-life.
- Support sustainable procurement practices.

For each of these criteria, the Envision™ framework defines metrics for five achievements levels that include: improved, enhanced, superior, conserving and restorative. These Envision™ metrics were considered as part of the decision-making criteria, which is discussed in the next section.

1.4 Criteria Selection and Prioritization for Business Case Evaluation

A primary objective and action item for WS 0/1 was establishing the decision-making criteria for use in the business case evaluations that will be performed in subsequent project phases. The chosen criteria, coupled with their relative weighting, which will be decided later, will provide quantitative metrics to aide in MMSD's decision-making process.

1.4.1 Overview of Criteria Considered and Selected Priority Criteria

A systematic approach was implemented during WS 0/1 to select the final criteria. The approach began with an open discussion of the criteria options to determine which to carry forward, followed by MMSD staff voting to rank the criteria based on relative priority. An initial list of criteria, grouped into various categories where applicable, was presented, and additional criteria were added through a brainstorming session.

Once the pool of eligible decision-making criteria was refined, the next step was to determine relative priority to further narrow down the list to only the most essential to MMSD. Each MMSD staff member in attendance was given five votes to be distributed among the selected criteria. A summary of all criteria considered, with chosen criteria in **bold**, their final categorization, and vote count as applicable is provided in Table 1.3 below.

Table 1.3 Decision-Making Criteria Considered and Associated Score

Category	Criteria(1)	Votes(2)
Financial	**Capital Costs**	5
	O&M Costs	-
	Life Cycle Costs	7
Sustainability / Environmental	GHG Footprint	0
	Envision™ Score	0

Category	Criteria(1)	Votes(2)
O&M	System Champion	-
	Operational Complexity/Difficulty	5
	Local Rep Abilities	0
	Operational Response/Risk/Uptime (Added)	3
	Operational Disruption (Added)	0
Implementation	Constructability	-
	Future Site Flexibility	3
Other	**Market Risk**	4
	Reliability of Technology	-
	Energy Resiliency	-
	Energy Recovery	3.5
	Regulatory Complexity	0.5
	Safety	-
	Community Partnering Opportunities	-
	Outside Dependence (Added)	4

Notes:
O&M - operation and maintenance.
(1) Bolded criteria were advanced to the voting step to determine relative priority and further screening.
(2) Criteria without a vote count, as indicated by a "-," were not carried forward to the voting phase.

Per the criteria voting results, the individual criterion of greatest priority according to MMSD staff is life cycle cost. When combined with capital cost, the financial category accounts for a total of 12 out of a possible 35 votes. Other notable criteria that scored relatively high in terms of importance were operational complexity/difficulty, which received 5 votes, as well as market risk and outside dependence which both received 4 votes. Ultimately, the criteria that received 3 votes or more were carried forward to be used for decision-making in this Project. These criteria and a brief description/evaluation metric are summarized in Table 1.4.

Table 1.4 Summary of Final Decision-Making Criteria

Category	Criteria	Description/Evaluation Metric
Financial	Capital Costs	Capital Cost (2025 $).
	Life Cycle Costs	Capital Cost + Lifetime O&M Costs - Revenue (2024 $).
O&M	Operational Complexity/Difficulty	Complexity of and operator familiarity with process and associated equipment (qualitative score).
	Operational Response/Risk/Uptime	Technology reliability, resilience, and issue response time requirements (qualitative score).
Implementation	Future Site Flexibility	Ability to fit on the existing site and integrate with existing infrastructure (qualitative score).

Category	Criteria	Description/Evaluation Metric
Other	Market Risk	Risk related to potential volatility in credit markets for CHP and RNG (qualitative score).
	Energy Recovery	Energy capture efficiency.
	Outside Dependence	Ability to address potential issues internally and level of reliance on outside resources (qualitative score).

Notes:
CHP - combined heat and power.

Achieving consensus on the decision-making criteria is a critical step foundational to the alternatives evaluation that will steer the evaluation towards factors of greatest importance to MMSD.

1.5 Energy Baseline

1.5.1 Introduction

Energy baselining was an important step in the energy master planning process and was detailed in the 2020 EMMP. There have not been significant changes impacting energy use at NSWTP since completion of the 2020 EMMP. The finalized baseline incorporating the relatively minor changes (ultraviolet [UV] disinfection equipment replacement) that have occurred at NSWTP since the 2020 EMMP is summarized in this TM. Understanding the current breakdown of energy consumption helps target potential energy reduction opportunities and establish the current energy consumption for use in evaluating potential energy optimization alternatives.

Current estimates of energy use for the major NSWTP equipment groups are summarized herein. The current baseline has been updated based on the actual energy use from the UV disinfection system, which was replaced in 2021.

1.5.1.1 Annual Energy Use Summaries

Figure 1.1 summarizes the electrical energy use profile for NSWTP from 2007 through 2019 as documented in the 2020 EMMP. Figure 1.2 shows similar information for MMSD's pump stations, including Pump Stations 9 and 17, which are serviced by Alliant Energy rather than Madison Gas and Electric (MG&E). Figure 1.3 shows the thermal energy use over the same time period.

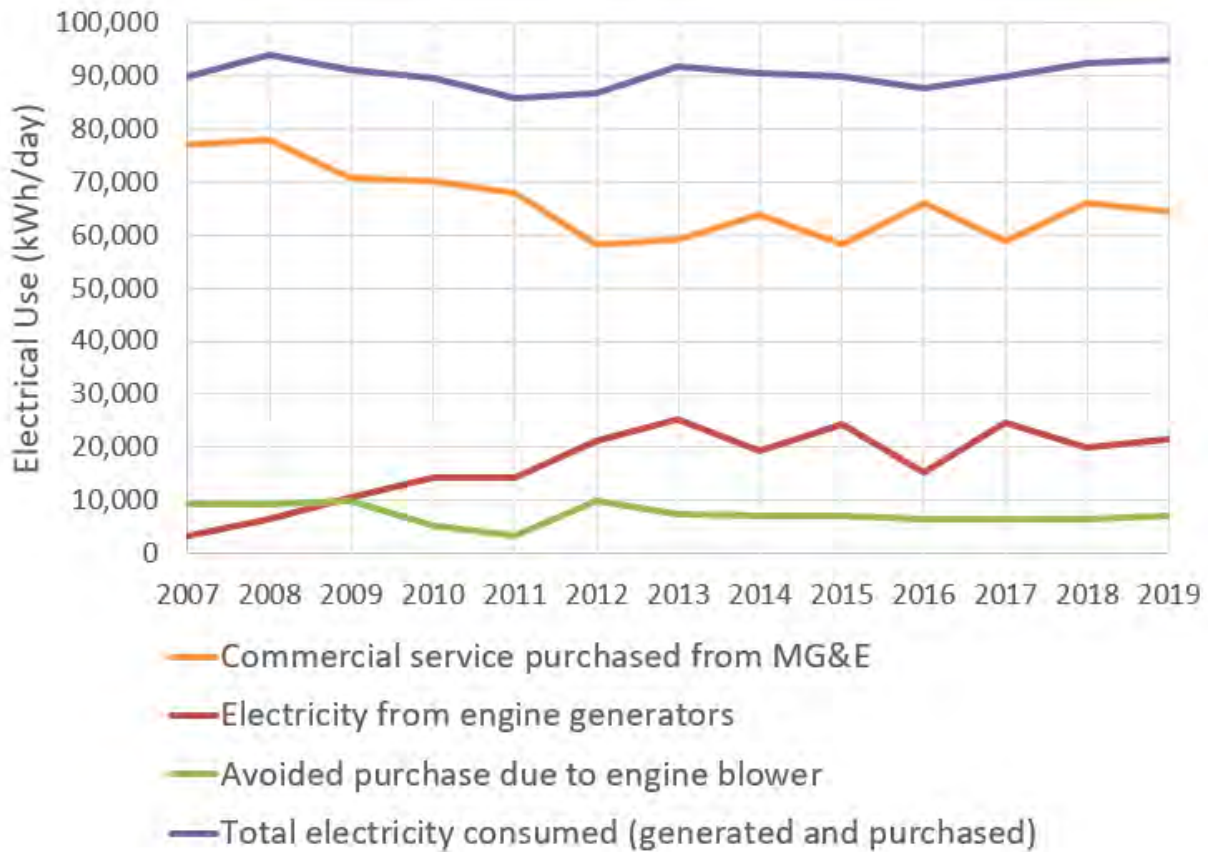

kWh/day – kilowatt hours per day

Figure 1.1 NSWTP Annual Electrical Energy Use

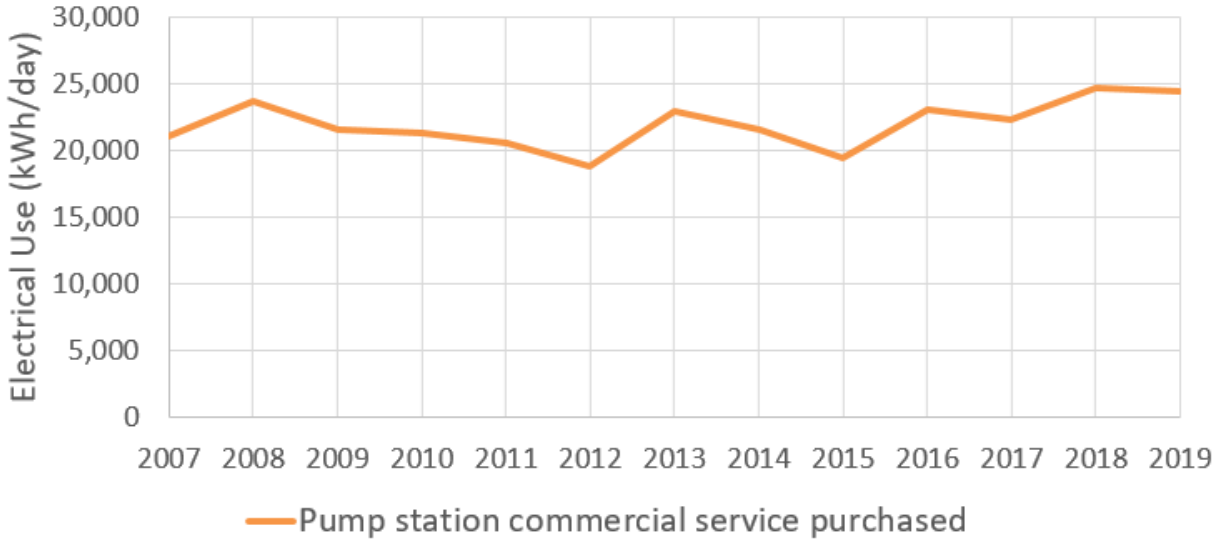

Figure 1.2 Pump Station Annual Electrical Energy Use Summary

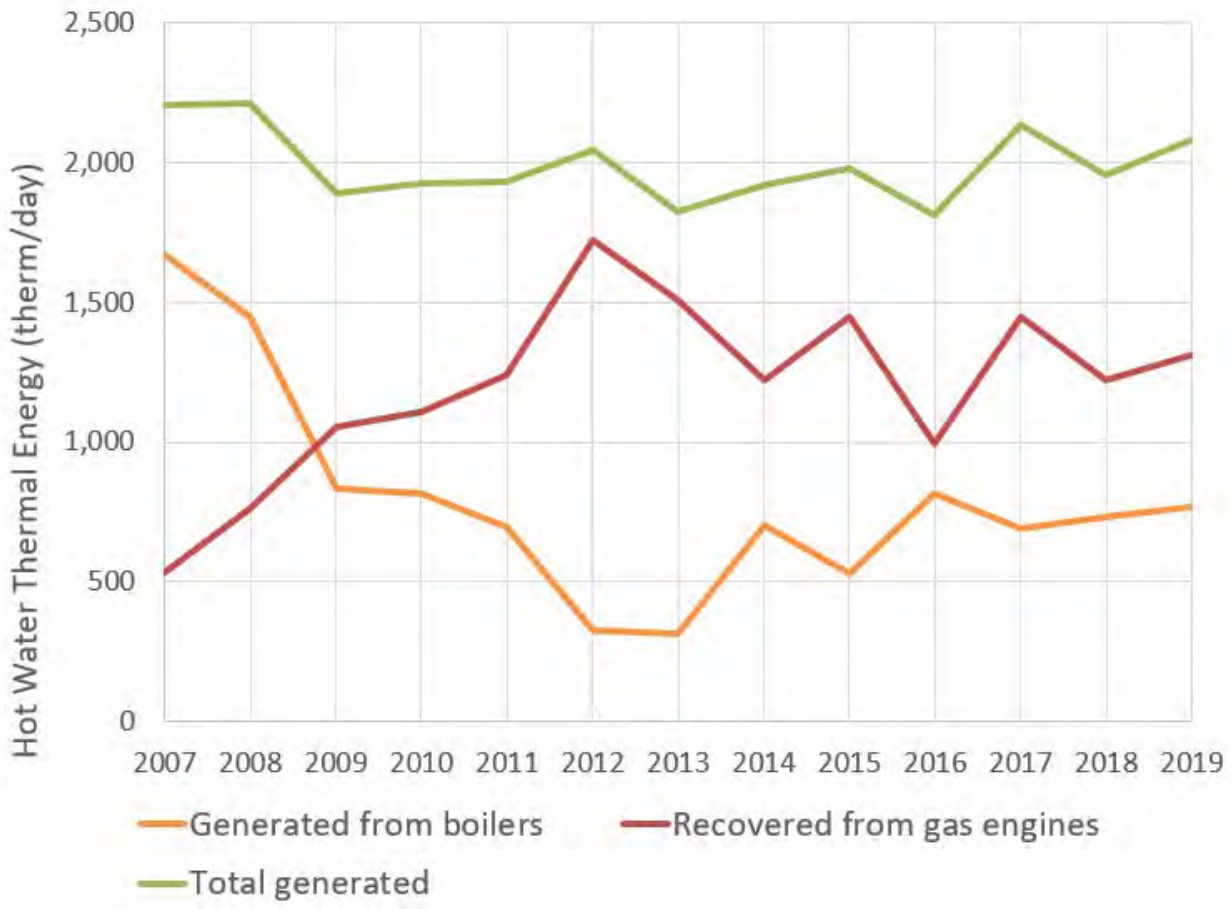

Figure 1.3 NSWTP Annual Thermal Energy Use Summary

Electrical energy use held relatively steady across the given time period with on-site electrical generation gradually increasing, while purchased electricity gradually decreases. In terms of thermal energy use, from 2007 through 2012 there was a significant shift toward thermal energy recovered from the gas engines, which reduced the thermal energy generated from the boilers. As noted in the 2020 EMMP, this demonstrates that MMSD has already begun trending towards greater energy independence.

The NSWTP treated an average flow of 44.3 million gallons per day (mgd) from 2015 through 2019. On a normalized basis, the NSWTP used 2,150 kilowatt hours per million gallons (kWh/MG) (purchased and generated power) to pump and treat this flow, not including energy used in the collection system. This average energy intensity is in line with other wastewater treatment plants based on average flow per reviewed surveys and studies. It should be noted that this energy intensity metric is a basic method of benchmarking energy performance and does not account for variations in plant sizes, organic loading, or treatment requirements.

1.5.1.2 Energy Consumption Types: Electrical and Natural Gas

Table 1.5 summarizes the various energy inputs to the NSWTP (not including collection system) on a cost, British thermal unit (Btu), and carbon footprint basis.

Table 1.5 Comparison of Purchased Energy Types at NSWTP

	Purchased Electrical Energy	Natural Gas
2015-2019 annual cost	$1,970,000	$53,000
2015-2019 annual units	22,871,000 kWh	28,100 MMBtu
Energy conversion	0.003412 MMBtu/kWh	0.100 MMBtu/therm
Carbon intensity	1,678 lb CO_2e/MWh(1)	117 lb CO_2e/MMBtu
2015-2019 annual energy Consumption	78,000 MMBtu	28,100 MMBtu
2015-2019 carbon footprint from purchased energy	17,400 tons	1,500 tons

Notes:
Abbreviations: CO_2e - carbon dioxide equivalents; USEPA - United States Environmental Protection Agency; MMBtu - million Btu; MWh - megawatt hour.
(1) Carbon equivalents, USEPA eGRID 2018, based on data for the MRO East electrical subregion which serves the majority of central Wisconsin.

A notable takeaway is the significant annual cost and carbon footprint contribution for which purchased electrical energy is responsible versus other purchased energy types. Accounting for an overwhelming majority in both categories justifies exploration of electricity demand reductions and/or renewable electricity alternatives to reduce annual costs while also reducing the carbon footprint of NSWTP.

Figure 1.4 provides a comparison of the electrical use in the unit process areas of the NSWTP (collection system not included) compared to a breakdown of comparable wastewater facilities and corrected for average flow. The electrical use for UV disinfection is based on the new equipment that was installed in 2021. Electrical use for the UV disinfection equipment is estimated based on nameplate and equipment runtime data.

Based on the available data, it appears that NSWTP uses less electrical energy than typical for secondary treatment and thickening/dewatering, but more energy than typical for solids treatment/handling and wastewater pumping. NSWTP also appears to recover significantly more electrical energy from biogas compared to typical facilities. Electrical consumption for non-process uses compares well with similar size facilities.

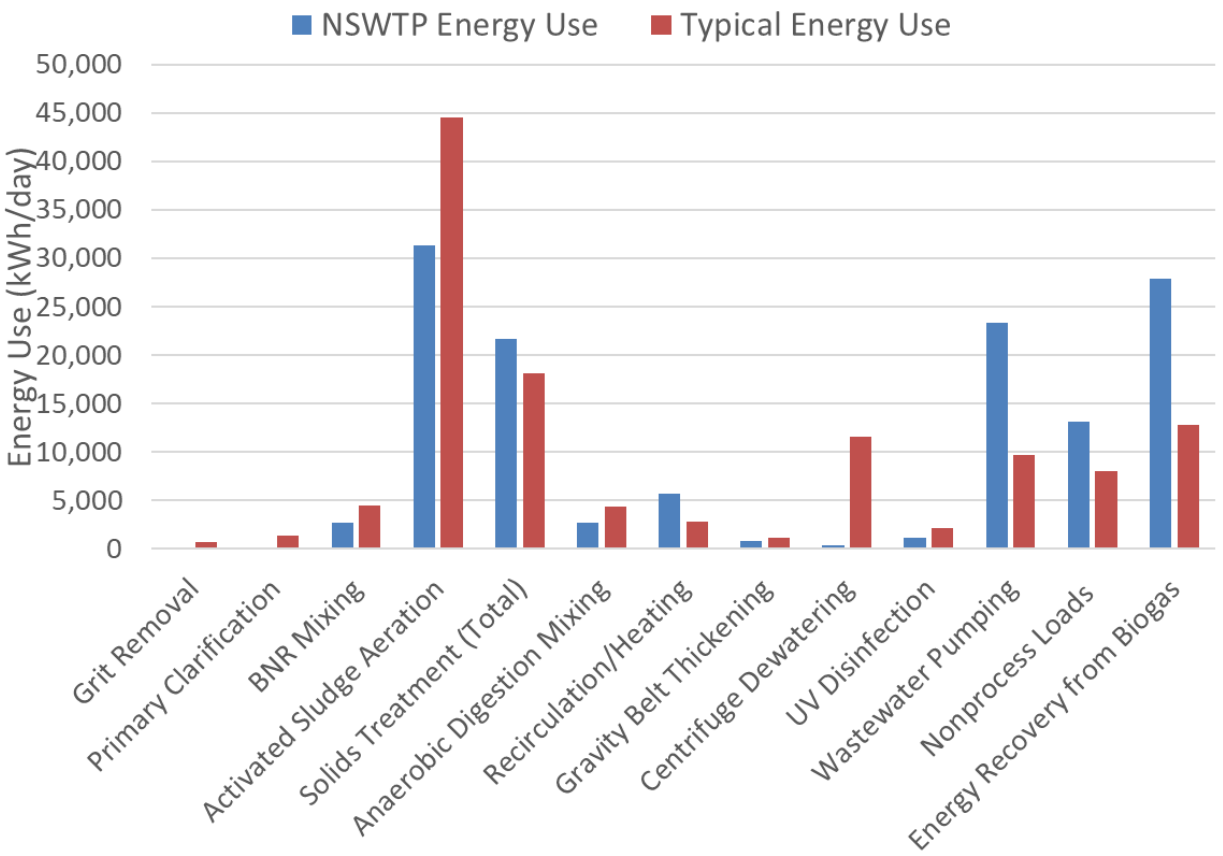

Notes: Typical Energy Use Sources include: WEF "The Energy Roadmap: A Water and Wastewater Utility Guide" 2013, WEF/EPRI "Electricity Use and Management in Municipal Water Supply and Wastewater Industries" 2013, Applied Energy "Monitoring and Diagnosis of Energy Consumption in Wastewater Treatment Plants" 2016.

Figure 1.4 Typical Wastewater Treatment Plant Energy Use and Energy Use at NSWTP

1.5.2 Electric Power Use

This section describes the use of electrical power at the NSWTP, including rates and major electrical consuming equipment.

1.5.2.1 Electric Rates

The NSWTP is billed by MG&E at a CG-6 rate schedule. The NSWTP electrical bills are dominated by consumption (kWh) charges, which account for approximately 74 percent of monthly NSWTP electrical billings. The average cost of power from 2015 through 2019 was $0.086 per kWh and has remained relatively constant during this time frame.

MG&E offers several programs related to renewable energy that could be utilized by MMSD to fulfill some or all of its energy needs, including Green Power Tomorrow (GPT) and Renewable Energy Rider (RER). MG&E has indicated that there is currently adequate green energy available through the GPT program to satisfy 100 percent of MMSD's energy needs. This approach would result in purchasing energy from existing renewable sources at an additional cost of $0.01/kWh for the percentage of green energy utilized.

While offering the advantage of procuring energy from 100 percent renewable sources immediately, this program does not encourage the development of new sources of renewable energy.

1.5.2.2 Year 2020 Baseline Electrical Use

The NSWTP has numerous power meters serving each process area. Each process area meter reads the aggregate power draw of the individual equipment groups within the area. Table 1.6 presents a summary of the Year 2020 annual energy use, which defines the baseline conditions based on the new UV disinfection equipment.

Table 1.6 Current Electrical Use Summary by Treatment Area

	Year 2020 (kWh/day)
Collections System	22,800
Headworks	2,200
Primary Treatment	400
Secondary Treatment	33,400
Effluent Pumping and Disinfection	24,900
Thickening, Digestion and Post-Thickening	16,200
Metrogro Storage, Pumping and Dewatering	2,700
Operations Building	3,400
Unaccounted for Electrical Use	7,100
Total	113,100

1.5.3 Biogas and Natural Gas Use

Essentially all biogas is utilized in engines or boilers at the plant with less than 4 percent of the biogas being flared on average (mainly in summer months). The plant currently produces approximately 900,000 cubic feet per day (cfd) of biogas (19 million MMBtuh). In addition to biogas, the NSWTP has four metered natural gas services for the following purposes/locations: blended biogas with natural gas, Vehicle Loadout Building heating, Shop 1 Boilers, and East Boilers.

1.5.3.1 Biogas and Natural Gas Baseline

Additional influent loadings to NSWTP will increase both biogas production and the energy required to heat the raw sludge during the digestion process. Biogas production and thermal demands are evaluated in TM 2.

1.6 Greenhouse Gas Emissions Baseline

One of the goals of the 2020 EMMP was to reduce GHG emissions associated with the heat and power infrastructure by a minimum of 10 percent. To incorporate this goal in the alternatives comparison analysis and to assess levels of goal achievement, a GHG inventory was developed to calculate the baseline GHG emissions of the existing systems following guidance from the United States Environmental Protection Agency (USEPA). The system boundaries were limited to the heat and power infrastructure and support systems including the consumption of fossil fuels in the form of electricity, natural gas, diesel fuel,

and unleaded gasoline, as well as biogas combustion and use. GHG emissions avoided or offset through the generation of electricity onsite from the use of biogas and natural gas were also included. It is important to note that GHG emissions associated with biogas combustion only represent methane and nitrous oxide. Carbon dioxide, because it is considered biogenic, is not a regulated GHG and is not included in the inventory.

Since the original GHG baseline was established as part of the 2020 EMMP, the only notable change is the replacement of the UV disinfection system in 2021 to a more energy-efficient model. Increased energy efficiency from the UV process (based on preliminary nameplate and runtime data) will lower purchased electricity demand and in turn, associated GHG emissions. The baseline GHG emissions and offsets by source for the NSWTP updated to reflect the UV system replacement are summarized in the Table 1.7.

Table 1.7 Updated GHG Baseline in Metric Tons of Carbon Dioxide Equivalents per Year

Source	Current (Year 2020) MT CO_2e/Year
Emissions	
Purchased Electricity	23,670
Natural Gas	1,490
Biogas (Combustion)	40
Acid Digester Biogas Treatment (Aeration Basins)	120
Offsets	
Electrical and Thermal Energy	-23,980
Emissions Summary	
Total Emissions	25,320
Total Offsets	-23,980
Net Emissions	1,340

Notes:
MT - metric ton(s).
(1) Baseline GHG emissions from purchased electricity prior to replacement of the UV system were 23,750 CO_2e/year.

As is typical, the largest source of emissions is from purchased electricity, accounting for 23,670 CO_2e/year or 93 percent of total emissions. This source of emissions is expected to increase into the future with increased flows and loadings. The replacement of the UV system modestly decreases GHG emissions associated with purchased electricity from 23,750 CO_2e/year to 23,670 CO_2e/year, a difference of 80 CO_2e/year.

1.7 Summary and Next Steps

The Kickoff and Visioning WS 0/1 established the following decision-making criteria to guide the business case evaluations.

- Financial:
  - Capital Costs.
  - Life Cycle Costs.

- O&M:
  - Operational Complexity/Difficulty.
  - Operational Response/Risk/Uptime (Added).
- Implementation:
  - Future Site Flexibility.
- Other:
  - Market Risk.
  - Energy Recovery.
  - Outside Dependence.

Life cycle and capital costs were the most highly prioritized criteria by MMSD staff in the context of this Project, followed closely by operational complexity/difficulty, as well as market risk and outside dependence.

Major changes to relevant air permitting requirements since the 2020 EMMP were not identified. Relevant WDNR air permitting rule changes have been proposed, though their impact is limited to changes in the requirements of inspection, monitoring, testing, reporting, recordkeeping, and compliance demonstration, as well as the expense of applying for air permits and exemption requests. It should be noted that any changes both operationally and in terms of emissions equipment resulting from improvements to the heat and power infrastructure will impact facility-wide emissions and consequently, air permits.

With respect to the energy and GHG baseline, changes since the 2020 EMMP are limited to the replacement of the UV system in 2021. Upgrading the UV system to a more energy efficient model modestly reduced overall plant energy use (based on preliminary nameplate and runtime data) and by extension, reduced GHG emissions stemming from purchased electricity.

The remaining TMs for Phase 1 include TM 2: Biogas Production and Thermal Demand Projections and TM 3: Existing Infrastructure Evaluation. WS 2 will be held to review the findings of TM 2, while WS 3 will be held in advance and to inform the development of TM 3. The information in TMs 2 and 3 will be used in Phase 2 and 3 of the Project which kicks off with the WS 4/6: Initial Biogas/Heating System Evaluation to begin discussions on those respective alternatives evaluations.

APPENDIX B

TECHNICAL MEMORANDUM 2 - BIOGAS PRODUCTION AND THERMAL DEMAND PROJECTIONS

Madison Metropolitan Sewerage District

Heat and Power Improvements Facilities Plan

TECHNICAL MEMORANDUM 2

Biogas Production and Thermal Demand Projections

FINAL / December 2024

carollo

STRAND ASSOCIATES

Madison Metropolitan Sewerage District

Heat and Power Improvements Facilities Plan

TECHNICAL MEMORANDUM 2

Biogas Production and Thermal Demand Projections

FINAL / December 2024

Digitally signed by Lindsey I. Busch
Contact Info: Carollo Engineers Inc.
Date: 2025.01.02 13:00:49-06'00'

WISCONSIN
LINDSEY I. BUSCH
E-45234-6
MADISON
WIS.
PROFESSIONAL ENGINEER

Contents

TM 2 BIOGAS PRODUCTION AND THERMAL DEMAND PROJECTIONS

2.1 Introduction 2-1
2.1.1 Purpose 2-1
2.2 Biogas System Overview 2-1
2.2.1 Existing Biogas System 2-1
2.2.2 Historical Biogas Production and Quality 2-3
2.2.3 Biogas Production Projections 2-5
2.3 Thermal Heating System Overview 2-7
2.3.1 Existing Thermal Heating System 2-7
2.3.2 Building Thermal Demands 2-9
2.3.3 Process Thermal Demands 2-11
2.3.4 Summary 2-15
2.4 Conclusion 2-15

Tables

Table 2.1 NSWTP Historical Biogas Quality Summary 2-4
Table 2.2 Comparison of Biogas Production Projections for Baseline and Alternative Future Conditions 2-7
Table 2.3 Current and Future Building Related Total Annual Thermal Demands 2-10
Table 2.4 Future Projected Annual Thermal Demands of New Buildings 2-11
Table 2.5 Current and Future Thermal Demands for Current Operation 2-13
Table 2.6 Current and Future Thermal Demands for Conversion to Thermophilic Digestion 2-14
Table 2.7 Current and Future Thermal Demands for Implementing Biosolids Drying 2-14

Figures

Figure 2.1 NSWTP Existing Biogas System 2-3
Figure 2.2 NSWTP Historical Daily Biogas Production (2020 to 2024) 2-4
Figure 2.3 NSWTP Baseline Biogas Production Projections through 2050 2-5
Figure 2.4 Comparison of Current and EMMP Biogas Projections 2-6
Figure 2.5 NSWTP Thermal System Schematic 2-8
Figure 2.6 Existing NSWTP Hot Water Heat Loop Schematic 2-12

Abbreviations

2020 EMMP	2020 Energy Management Master Plan
Bhp	boiler horsepower
BOD	Biological Oxygen Demand
Btu	British thermal units
cfd	cubic feet per day
CH_4	methane
CO_2	carbon dioxide
deg. F	degrees Fahrenheit
ft^2	square feet
FOG	fat, oil and grease
gpd	gallons per day
H_2S	hydrogen sulfide
HVAC	heating, ventilation, and air conditioning
HSW	high-strength waste
kW	kilowatt
LP2	Liquid Process Phase 2
MMBtu	million Btu
MMBtuh	metric million british thermal units per hour
MMSD	Madison Metropolitan Sewerage District
No.	number
NSWTP	Nine Springs Wastewater Treatment Plant
ppbv	parts per billion by volume
ppm	parts per million
PS	primary sludge
psi	pounds per square inch
TM	Technical Memorandum
WAS	waste activated sludge

TM 2 BIOGAS PRODUCTION AND THERMAL DEMAND PROJECTIONS

2.1 Introduction

2.1.1 Purpose

The purpose of this Technical Memorandum (TM) is to document the biogas production and thermal demands for current and future conditions. Projections were developed while considering various potential influencing factors and scenarios: projected influent loadings based on the Liquid Process Phase 2 (LP2) Nine Springs Wastewater Treatment Plant (NSWTP) projections through 2050, operational changes such as the elimination of the biogas-driven blower and heating, ventilation, and air conditioning (HVAC) upgrades, potential conversion to fully thermophilic operation, and potential future biosolids drying. The biogas and thermal demand projections presented in TM 2 will be carried forward into Phase 2 and Phase 3 and applied in the biogas and plant-wide heating system evaluations, respectively.

2.2 Biogas System Overview

2.2.1 Existing Biogas System

2.2.1.1 Anaerobic Digesters

NSWTP produces biogas from the anaerobic digestion of their primary sludge (PS) and waste activated sludge (WAS). NSWTP has two acid Phase digesters and nine methane phase digesters, of which, currently, six are operated as mesophilic (Digester Number [No.] 4, No. 5, No. 6, No. 7, No. 8 and No. 9) and three are operated as thermophilic (Digester No. 1, No. 2, and No. 3), though NSWTP has the ability to operate all nine as thermophilic. The combined thickened sludge is fed continuously to the acid Phase digesters, one in service at a time, and then transferred to the mesophilic digesters. About 15 percent, on average, and up to 25 percent of the digested sludge is transferred from Digester No. 7 to the thermophilic digesters for generating Class A biosolids.

Acid Phase digestion generates "sour gas" as a by-product, which is gas with a high concentration of hydrogen sulfide (H_2S) and low concentration of methane. The sour gas is kept separate from the biogas and is not used as fuel for any equipment due to its low British thermal units (Btu) and high contamination level. The sour gas is sent to a foam separator and is compressed before releasing it into Aeration Tank No. 14 and No. 17 mixed liquor.

In addition to thickened combined sludge, NSWTP has the ability to feed high-strength waste and fat, oil and grease (HSW-FOG) to their anaerobic digesters, for instance, using their two whey pumps. These pumps can transfer HSW-FOG from the 45,000-gallon "whey" wells to the east mesophilic digesters (Digester No. 4, No. 5, No. 6, No. 7, No. 8, and No. 9) or to the acid digesters. Note that the wells are unmixed and unheated, so the addition of mixing or conditioning would need to be evaluated to avoid

separation/stratification of the FOG at ambient temperatures. Adding high-strength waste to the digesters brings the benefit of increased biogas generation. The Madison Metropolitan Sewerage District (MMSD) currently does not regularly feed HSW-FOG to the anaerobic digesters.

The plant generates biogas from the nine methane-Phase anaerobic digesters. The gas can either flow to the gas booster pumps or to two sludge storage tanks (Storage Tank No. 1 and No. 2) with gas holding covers. The digester gas systems upstream of the gas boosters are typically maintained at a pressure of between 11 to 13.5 inches of water column. The biogas pressure in the storage tanks controls the sequencing of the biogas using equipment.

2.2.1.2 Biogas Conditioning

All biogas sent to end use equipment and beneficially used as fuel is treated in an outdoor gas conditioning skid. The gas is boosted from the storage tanks to the skid utilizing three gas booster pumps (Gas Booster Pump No. 1, No. 2 and No. 3). The conditioning skid removes moisture (utilizing two heat exchangers/condensers), H_2S (using a vessel of iron-impregnated wood chips), and siloxanes (via two vessels with engineered carbon). A booster pump on the skid provides the necessary pressure to convey the gas to the various end uses.

2.2.1.3 Biogas End Uses

Once the gas is pressurized and conditioned, it travels through the biogas piping to the different end-use equipment at a pressure ranging between 2 and 4 pounds per square inch (psi). Biogas is sent to some or all of the following end uses: one engine-driven blower, two engine-generators, six hot water boilers, and four steam boilers on biogas. While NSWTP could feed biogas to their Shop 1 boilers, typically these operate strictly on natural gas due to low pressure when operating on biogas.

To maintain the fuel supply when the end use demands are higher than available supply, especially when stored biogas reserves are low, NSWTP can utilize up to two blended gas boosters to blend air and natural gas to achieve a blended gas with a similar energy content as biogas. The gas booster pumps pressurize the blended gas and feed it downstream of the gas conditioning skid into the pressurized biogas piping.

NSWTP uses a waste gas burner to combust the excess biogas that is not used by the equipment. Additionally, as a safety measure, the digester covers and sludge storage tank covers have pressure/vacuum relief valves to release biogas to the atmosphere when the gas pressure is too high. Each digester has two relief valves for redundancy. A process flow diagram of the existing biogas system at NSWTP is presented in Figure 2.1.

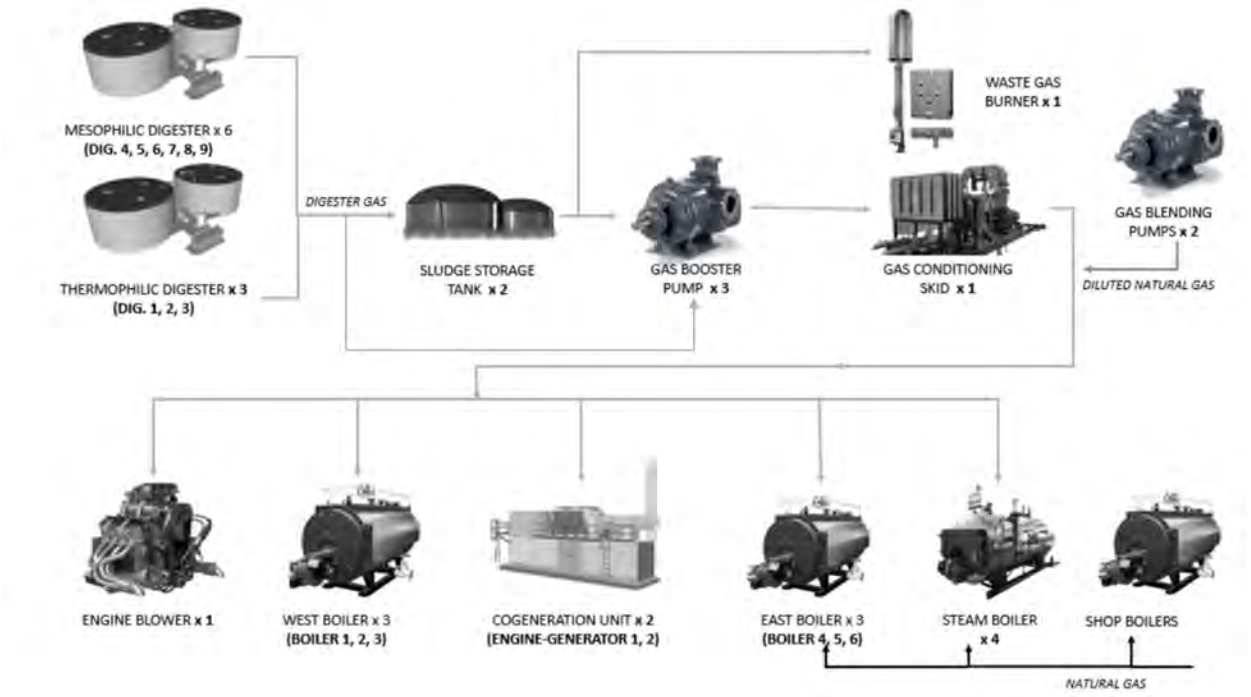

Figure 2.1 NSWTP Existing Biogas System(1)

NSWTP features an extensive biogas system that allows MMSD to use the biogas produced in a multitude of beneficial ways, whether for heating or onsite electricity generation.

2.2.2 Historical Biogas Production and Quality

2.2.2.1 Biogas Production

NSWTP currently produces approximately 900,000 cubic feet per day (cfd) of biogas in its nine anaerobic digesters per the black trendline fit to the daily biogas data plotted in Figure 2.2. The biogas data is the sum of all biogas sent to all end uses (generators, West and East hot water boilers, engine blower, and steam boilers) and any excess biogas sent to the flare for the period from June 2020 to July 2024. Across that period, biogas is observed to generally be trending upward, which can primarily be attributed to increased influent loadings to the facility. Other contributing factors include an increase in FOG waste and trucked septage over the last two years. Instead of getting fed directly to the digesters, this FOG waste is received at the headworks, skimmed in the primary clarifiers, and then sent through solids processing. The resulting increase in organic loading to the digesters would provide a bump to overall biogas production.

[1] Acid Phase Digesters produce a sour gas which is not combined with the biogas system.

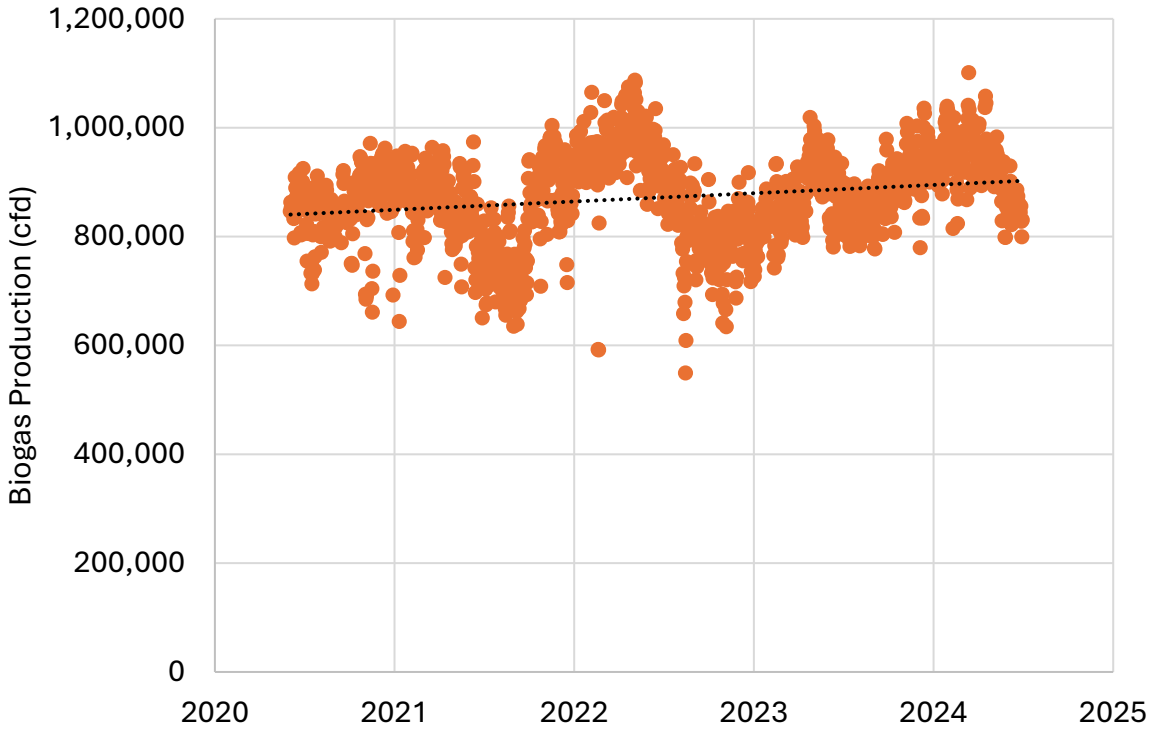

Figure 2.2 NSWTP Historical Daily Biogas Production (2020 to 2024)

2.2.2.2 Biogas Quality

The quality of biogas will determine the level of treatment required for the evaluated alternatives. MMSD provided historical biogas quality data, including methane (CH_4), carbon dioxide (CO_2), H_2S and siloxane concentrations. The biogas quality data for constituents of interest are summarized in Table 2.1.

Table 2.1 NSWTP Historical Biogas Quality Summary

Constituent	Value
Meso/Thermo Biogas	
CH_4, % (Average)	61%(1)
CO_2, % (Average)	37%(2)
Nitrogen, % (Average)	0.8%(2)
Oxygen, % (Average)	0.2%(3)
H_2S, ppm	80 - 500(1)
Siloxanes, ppbv	100 - 700(4)
Acid Biogas	
H_2S, ppm	15,000 - 20,000(5)

Notes:
ppbv - parts per billion by volume; ppm - parts per million.
(1) Based on daily data for April 2023 to September 2024.
(2) Based on intermittent daily data for November 2023 to January 2024.
(3) Based on daily data for August 2021 - August 2024.
(4) Based on lab test results for February 2021 - December 2023.
(5) Based on lab test results for samples collected in 2014.

The raw biogas composition at NSWTP is consistent with typical ranges. The H_2S content of the raw biogas generated by the mesophilic/thermophilic digesters at NSWTP is on the lower end, ranging from 80 - 500 parts per million (ppm) over the last year and half. The relatively low concentration of H_2S is due to partitioning into the acid phase digesters and to the addition of ferric chloride to the mesophilic digesters. By comparison, the sour gas produced by the acid phase digesters has an H_2S content ranging from 15,000 to 20,000 ppm.

2.2.3 Biogas Production Projections

2.2.3.1 Baseline

The baseline biogas production projections were developed based on future influent biological oxygen demand (BOD) loading conditions through the year 2050 per the Influent Flow and Loading Projections TM (Brown and Caldwell/Strand, 2023). Biogas production was projected assuming the same rate of increase as the annual average influent BOD loading projections, which is approximately 0.9 percent annually. The influent BOD loading and biogas production baselines were established and calculated as the annual average for the last full year of daily influent BOD loading data (March 2022 to March 2023). The biogas projections at 10-year intervals through 2050 alongside historical biogas production from 2020 to 2024 are presented in Figure 2.3.

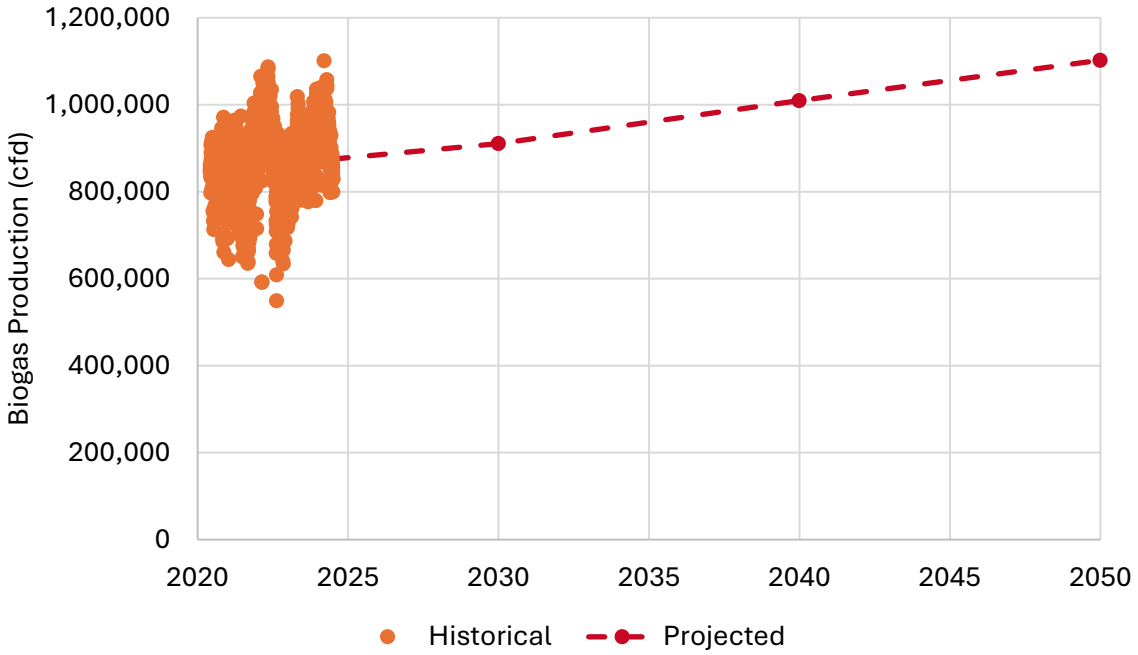

Figure 2.3 NSWTP Baseline Biogas Production Projections through 2050

The biogas production projections generally follow the upward trajectory observed in the historical biogas production data, increasing from the March 2022 to March 2023 baseline of 859,000 cfd and topping out at 1,102,000 cfd in 2050, an overall increase of 243,000 cfd or 28 percent growth over the 28-year period. These projections match very closely to those from the 2020 Energy Management Master Plan (2020 EMMP), as illustrated in Figure 2.4.

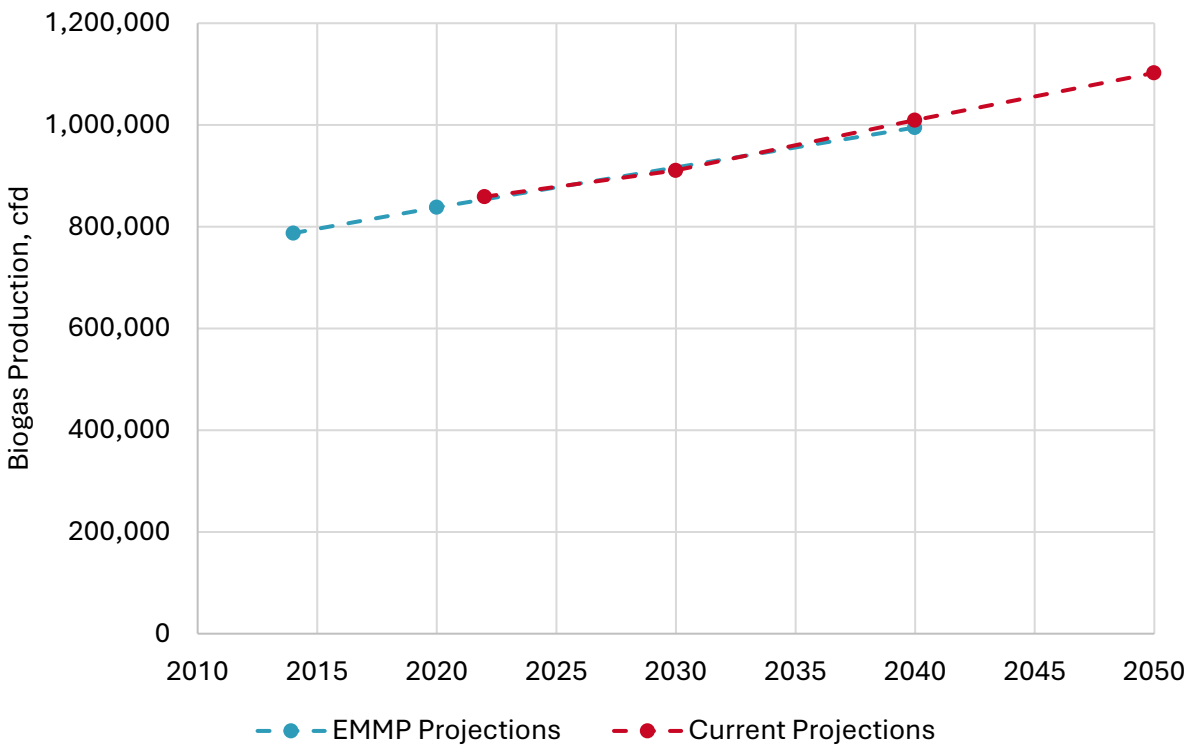

Figure 2.4 Comparison of Current and EMMP Biogas Projections

2.2.3.2 Alternative Future Conditions

To account for varying future conditions that could impact future biogas production, projections were also determined for the following scenarios: addition of hauled FOG waste directly to the digesters, and conversion to exclusively thermophilic digestion. The FOG waste addition would supplement existing PS+WAS digestion and could substantially increase biogas production. The extent of additional biogas production can vary widely, depending on the feedstock and mix. As part of the alternatives analysis in the 2020 EMMP, the impact of hauled waste on biogas production was evaluated and the practical estimate of increased biogas production was approximately 144,000 cfd (2020 EMMP TM 2.2 Alternatives Evaluation, Co-Digestion CD2 - Co-Digestion of FOG in All Digesters).

Similarly, a conversion to purely thermophilic digestion will result in an increase in biogas production due to increased volatiles solids reduction from higher operating temperatures than at mesophilic temperatures. Currently, aside from the acid phase digesters, NSWTP operates six mesophilic digesters and three thermophilic digesters, which only receive on average 15 percent of the digested sludge from the mesophilic digesters. Conversion of Digesters No. 4 through No. 9 to thermophilic digestion is projected to increase total biogas production by approximately 10 percent based on literature and past experience. A summary of biogas production projections for these alternative conditions alongside the baseline projections are provided in Table 2.2. Note that the hauled waste scenario, like the baseline scenario, is based on the current methane phase digester operation strategy with six digesters operated as mesophilic and three as thermophilic.

Table 2.2 Comparison of Biogas Production Projections for Baseline and Alternative Future Conditions

	Biogas Production Projections (cfd)		
	Baseline	Hauled Waste	Thermophilic Digestion
2022	859,000	859,000	859,000
2030	911,000	1,055,000	1,002,000
2040	1,009,000	1,153,000	1,110,000
2050	1,102,000	1,246,000	1,212,000

By 2050, under the hauled waste and thermophilic digestion conditions, biogas production projections increase by approximately 144,000 and 110,000 cfd from baseline, respectively.

A notable consideration that is a consequence of expected increases in biogas production for both the baseline conditions and the alternative future conditions is biogas storage capacity limitations. Currently, gas storage is provided inside two 70-foot diameter sludge storage tanks with gasholder covers and a combined capacity of 64,400 cubic feet (at 12.5 inches water column). Current storage capacity provides approximately 84 minutes, 74 minutes, and 76 minutes of storage for the projected 2050 biogas production for the baseline, hauled waste, and thermophilic digestion conditions, respectively. Under the hauled waste condition, though, the increase in biogas production has greater variability that could cut down on available storage time. The potential need for additional biogas storage will be considered as part of the Phase 2 evaluations for various biogas use scenarios.

2.3 Thermal Heating System Overview

Thermal demands at NSWTP can be broken into two categories: building related demands and treatment related (process) demands. Current process demands were summarized in TM 1 using data previously gathered during the development of the EMMP. The future process demand projections were developed based on the projected influent loadings consistent with the LP2 NSWTP design. Thermal demands considering the impacts of eliminating the gas-driven blower, expanding thermophilic digestion and implementing biosolids drying are also developed and are presented in this section.

2.3.1 Existing Thermal Heating System

2.3.1.1 Hot Water Loops

NSWTP has four hot water loops: North, Central, East, and West. The North loop, or Shop loop, is physically separated from the others at the North end of the facility and supplies hot water to Shop Buildings 1 and 2, Storage Buildings 1 and 2, and the Effluent Building. The East, West, and Central loops are interconnected and supply hot water to the heating units and process equipment throughout the plant, excluding the buildings serviced by the North loop.

The primary uses of heat from the hot water system are digester heating, HVAC system use (unit space heaters and the absorption chiller), and the struvite dryers. Though many buildings utilize hot water unit heaters, some buildings are heated using electric heaters and others are not heated.

2.3.1.2 Cogeneration and Boiler Systems

Waste heat from the two cogeneration engines and one engine blower is a significant source of heat for the hot water system. NSWTP captures heat mainly from the lube oil and jacket cooling water with the option to extract additional heat from the exhaust, if needed. Two 475-kilowatt (kW) Waukesha engine generator units provide waste heat (up to 2.0 metric million British thermal units per hour [MMBtuh] each) to the East loop while NSWTP's Waukesha engine blower unit provides waste heat (up to 1.6 MMBtuh) to the West loop. All the engines are more than 30 years old and are in need of replacement. The engine blower is anticipated to be removed from service within this planning period. The three West Boilers No. 1, 2, and 3 are located in the Boiler Building and provide baseload heating to the Central loop. The West Boilers are Cleaver Brooks units, each with a rated output capacity of 4.4 MMBtuh. The three East Boilers No. 4, 5, and 6 are located in Solids Control Building No. 2 and provide supplemental heating to the East loop. The East Boilers are Unilux packaged units and each has a rated output capacity of 8.8 MMBtuh. A schematic diagram of the thermal system is shown in Figure 2.5.

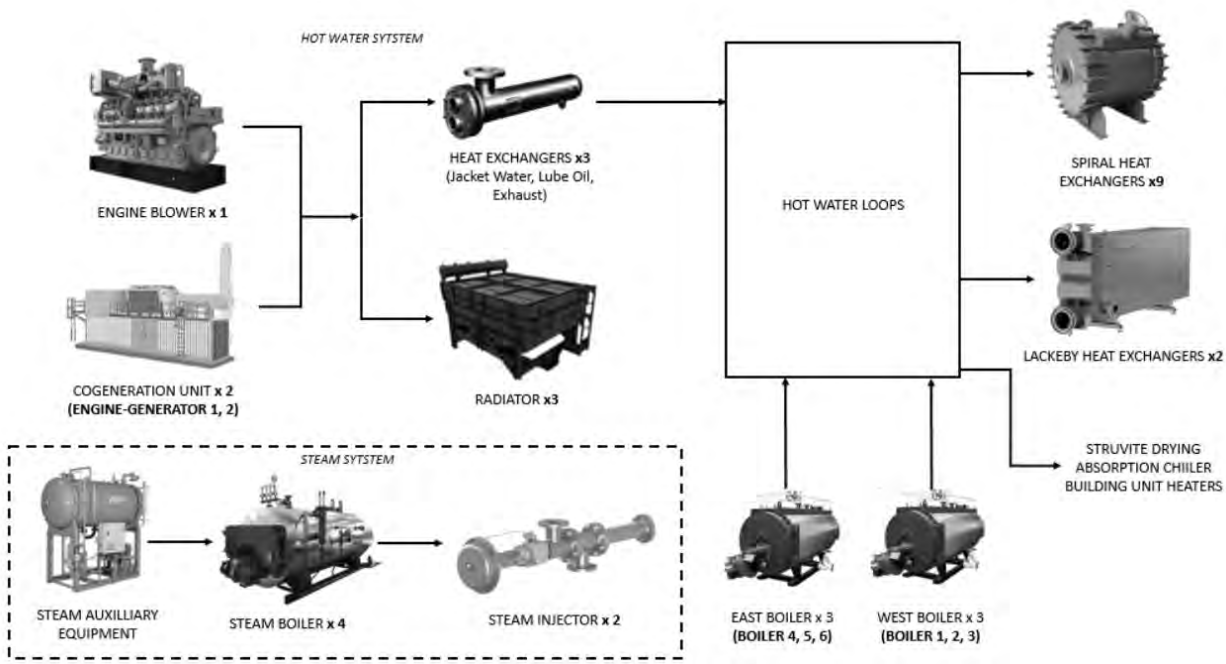

Figure 2.5 NSWTP Thermal System Schematic

The hot water loops are maintained at a temperature between 208 and 212 degrees Fahrenheit (deg. F). Priority is given to the two engine jacket water heat exchanger systems and then to the lube oil heat exchanger systems. The exhaust heat exchanger system is only activated if additional heat is needed. Each engine has a single exhaust stack with an exhaust heat exchanger that can be used or bypassed. Staff must manually adjust the valves to switch from recovering heat to bypassing the heat exchanger for each exhaust stack. Under normal operations, the excess heat is dissipated through exhaust radiators.

The West boilers are typically in operation and operate with one boiler in service unless additional heat is needed. The boiler pumps run constantly to keep the boilers warm between firing cycles. In winter months, two of the West Boilers may operate.

The East Boilers also provide supplemental heat and typically operate with only one unit in service during the summertime and typically two units in service in the winter. Generally, the West Boilers are given priority over the East Boilers. If the engines are shut down, both the East and West boilers will fire. The East Boilers will continuously cycle to raise the East hot water loop to 215 deg. F. If the East hot water loop drops to 205 deg. F, the control system will activate a second boiler to supply additional heat.

There are nine spiral heat exchangers for digester heating: six are used to maintain mesophilic temperatures (95 deg. F) in Digesters No. 4 through No. 9, and three maintain thermophilic temperatures (134 deg. F) in Digesters No. 1 though No. 3. MMSD also has two tube-in-tube heat exchangers to increase the temperature of mesophilic sludge before transfer to the thermophilic digesters. NSWTP maintains two spiral heat exchangers to cool sludge down prior to storage in the sludge storage tanks. Sludge cooling is used to improve effectiveness of polymer in the downstream thickening operations. The cooling heat exchangers are shut off when sludge temperatures drop to 97 deg. F.

2.3.1.3 Steam Heating System

NSWTP operates four Fulton 150 Boiler Horsepower (Bhp) steam boilers installed in 2012 to supply steam solely to the acid Phase digesters. Two units are operated in a lead-lag set-up to supply a pressure of 60-70 psi in the steam lines. The boilers' firing is based on steam demand for the digester heating. Due to inconsistent loading, the boilers may fire several times in an hour. Staff cycles the boilers frequently, and all four boilers will operate over the course of a week.

All steam produced is injected into the acid Phase digesters, so no condensate is recovered. A blowdown receiver is used to pre-heat softened make-up water. Chemicals are added to the make-up water to reduce corrosive effects, which is pressurized to approximately 150 psi in the de-aeration system prior to entering the steam boilers.

NSWTP has two steam hydroheaters and two steam injectors (which are currently out of service). The active steam hydroheaters inject steam into a recirculating sludge stream to increase the temperature of the acid Phase digesters to mesophilic conditions. The steam pressure immediately before injection into the hydroheaters is 65 psi. The steam injectors operate one at a time and are rotated weekly. The out of service steam injectors located in the basement were installed for a process that was never implemented.

2.3.2 Building Thermal Demands

Building related thermal demands were separated into two categories: ventilation heating and envelope heating. Ventilation heating encompasses heating of return air or outside air supplied to a space, such as make up air units and air handling units. This demand is the amount of energy required to heat the return air or outside air to the desired air temperature supplied into the space. The envelope heating demand is the amount of energy required to offset the energy lost through building walls, roofs, and floors during cold weather months. Envelope heating equipment includes unit heaters, radiators, and the absorption chiller.

Thirty-six buildings and five galleries were reviewed for building related thermal demands. The Vehicle Loading Building was not included in the review as it is currently served with natural gas and it is not easy to connect to the existing hot water loop because the building is located across the street. There are two hot water distribution systems (the North Loop and the Central-East-West Interconnected Loop) that provide the bulk of the heating to the NSWTP structures. Table 2.3 summarizes the total heating loop demand on an annual basis. The future value reflects the potential increased ventilation and improved envelope heating as noted in the Facility HVAC Study 2021 prepared by Strand Associates, Inc.

Table 2.3 Current and Future Building Related Total Annual Thermal Demands

Building	Current Total Demand		Future Total Demand	
	Ventilation(1) (MMBtu/year)	Envelope(2) (MMBtu/year)	Ventilation(1) (MMBtu/year)	Envelope(2) (MMBtu/year)
East, Central, West Interconnected Loop Total	29,400	10,800	33,900	12,100
North Loop Total	1,900	3,500	1,900	4,000
Total	31,300	14,300	35,800	16,100

Notes:
MMBtu - million British thermal units.
(1) Total ventilation demand is estimated using bin weather data for Madison, Wisconsin for outside air conditions on a heating design day. The current ventilation demand is based on heating outside airflow at current rates associated with the noted hot water loops. The future ventilation demand is based on heating outside airflow at proposed rates noted in the Facility HVAC Study 2021 prepared by Strand Associates, Inc. Estimates for both current and future demands were developed to reflect the amount of time the different pieces of HVAC equipment are in operation.
(2) Total envelope demand is estimated using building envelope modeling software on a heating design day. The current envelope demand was determined based on the existing connected unit heater capacity. Existing drawings were used to obtain existing unit information. When capacity information was unavailable, a comparison was made between similarly sized unit heaters, pipe connections and unit dimensions, to project the capacity. The future envelope demand is calculated using building modeling software to analyze the structures associated with the noted hot water loops. A simple model was developed for each structure using the existing wall, roof, and floor assemblies. The future demand value represents the theoretical envelope heat required on a heating design day.

2.3.2.1 50-Year Master Plan Building Thermal Demands

The Capital Project Infrastructure Placement Plan developed by TKDA in July 2023 for the NSWTP lays out plans for improvement and expansion on the plant. This includes proposed additions to existing buildings and new buildings that will require heat. Table 2.4 summarizes the projected thermal heat demands to these spaces and what loop the proposed items would be connected to. The heat loads are based off the proposed areas noted in the Capital Project Infrastructure Placement Plan. The Plant Expansion and Solids Digestion Expansion did not have a proposed building area, but the Plant Expansion mentioned adding a blower building so this load was based off existing blower buildings at the plant.

Table 2.4 Future Projected Annual Thermal Demands of New Buildings

Building	Proposed Area (ft^2)	Total Heat Demand (MMBtu/year)	Connected Loop
Metrogo Fleet Storage and Maintenance(2)	23,500	1,900	Central, East, and West loop
Septage Receiving Facility(1)	2,880	400	Central, East, and West loop
Campus Security/Safety Improvements(1)	30,800	3,700	Central, East, and West loop
Storage and Maintenance Shop expansion(2)	19,000	1,500	Central, East, and West loop
Plant Expansion(3)	None Provided	1,600	Central, East, and West loop and North loop
Solids Digestion Expansion(4)	None Provided	Unknown	Central, East, and West loop

Notes:
ft^2 - square feet.
(1) Total heat demand includes building and ventilation heat loads. Building envelope load assumed a demand of 30 Btu/ft^2 using the areas proposed in the Capital Project Infrastructure Placement Plan. Ventilation load is estimated using bin weather data for Madison, Wisconsin with 10 percent outside air.
(2) Total heat demand includes building and ventilation heat loads. Building envelope load assumed a demand of 30 Btu/ft^2 using the areas proposed in the Capital Project Infrastructure Placement Plan.
(3) Capital Project Infrastructure Placement Plan proposed a new blower building, but not area was provided. Heat load assumes a new building similar to existing Blower Building No. 2.
(4) No area provided in the Capital Project Infrastructure Placement Plan.

2.3.3 Process Thermal Demands

In addition to building thermal demands, the NSWTP hot water heating system provides process heat for the digesters and the struvite recovery dryers. The Shop 1 loop and the steam boilers are separate from the interconnected East-Central-West loops heat loop that supplies most of the plant's heating demand. A schematic representation of the West-Central-East hot water-based heat loop is shown in Figure 2.6.

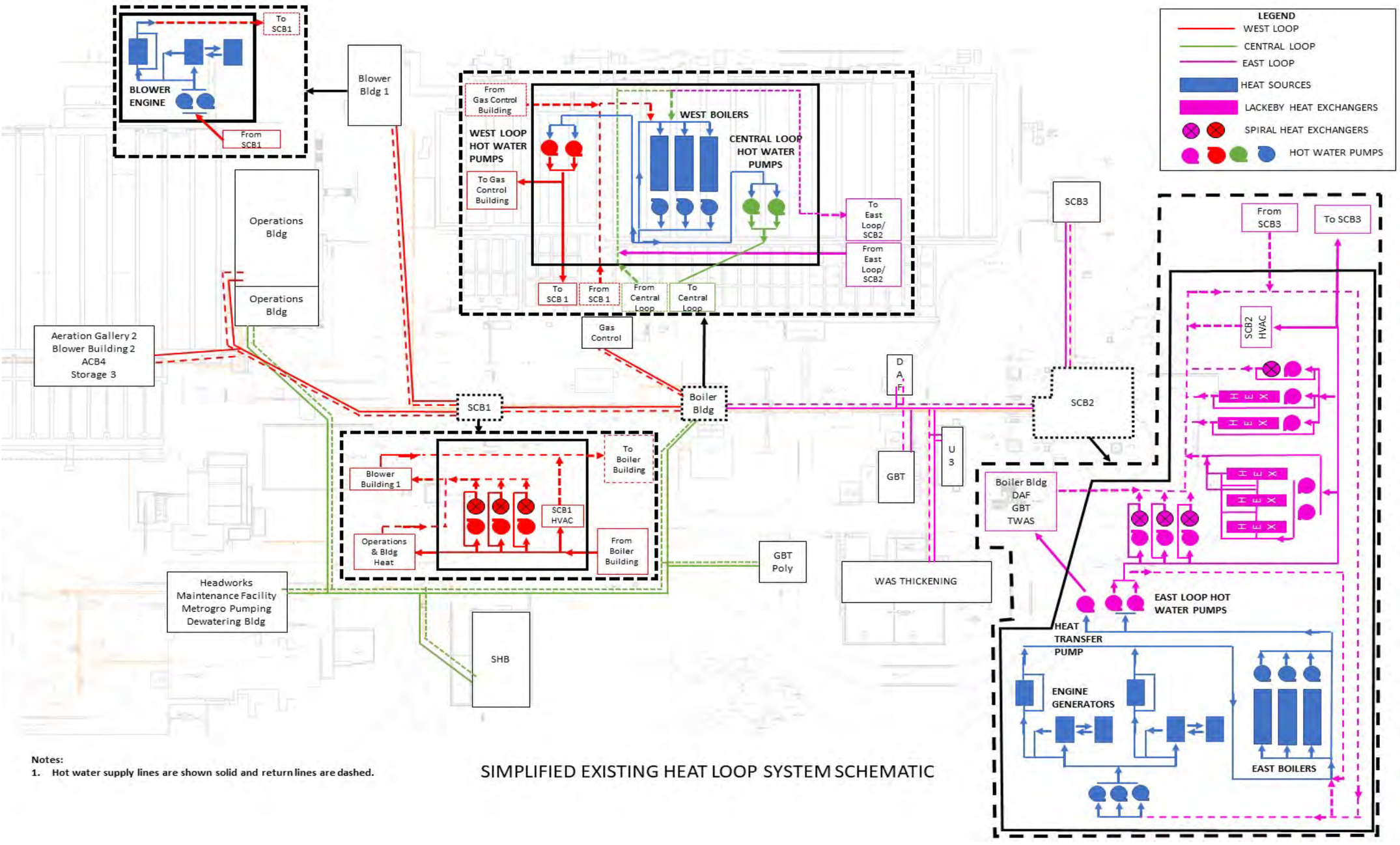

Notes:
1. Hot water supply lines are shown solid and return lines are dashed.

SIMPLIFIED EXISTING HEAT LOOP SYSTEM SCHEMATIC

Figure 2.6 Existing NSWTP Hot Water Heat Loop Schematic

Heat demands were estimated for 2020 and 2050 to assess the thermal requirements for building heating/cooling as noted in Section 2.3.2, sludge heating for digestion as currently operated, digester tank losses, and struvite drying. Process heating for 2050 was estimated based on the projected digester feed flows/loads consistent with the approach for biogas projections. Digester heating assumed mesophilic operations in Digesters 4-9 and thermophilic operation of Digesters 1-3 for 15-percent of the overall sludge flow, as currently practiced. As noted earlier, the steam boilers provide initial sludge heating for the acid Phase digesters, so most of the sludge heating demand is served by the steam boilers and not reflected in the hot water-based heat demands. Building and tank loss heat demands were assumed to remain constant. Table 2.5 summarizes the total maximum and minimum thermal energy demand estimated by season in 2020 and 2050. Although the steam boilers are not interconnected with the hot water heating loops, the thermal demands for the acid Phase digestion system are included for completeness. Additional scenarios for the conversion of Digesters No. 4 through No. 9 to thermophilic operation and the implementation of biosolids drying are provided in Tables 2.6 and 2.7, respectively. The thermal demand associated with receiving the "practical" volume of FOG waste discussed in 2.2.3.2 is relatively minor (approximately 1 percent of the total demand) and is not included in the values shown below.

Table 2.5 Current and Future Thermal Demands for Current Operation

	Current (Year 2020) Demand	Projected (Year 2050) Demand
Steam Heat - Digestion(1) (MMBtu/year)	29,600	38,800
Hot Water Heat - Digestion(2) (MMBtu/year)	14,300	15,000
Hot Water Heat - Struvite Drying (MMBtu/year)	5,600	6,700
Hot Water Heat - Buildings(3) (MMBtu/year)	40,700	47,000
Total (MMBtu/year)	90,200	107,500

Notes:
gpd - gallons per day
(1) Based on sludge flows/loads to reflect digester feed flow of 218,000 gpd in 2020 and projected feed flow of 291,000 gpd in 2050.
(2) Sludge heating based on summer and winter conditions for sludge heating as defined in Applied Technologies' 2011 Design Memorandum No. 5: 11th Addition to the NSWTP. Methane Phase mesophilic and thermophilic sludge heating demands for spring and fall are estimated as averages between the summer and winter values because sludge-specific information was provided only for summer and winter in the referenced memorandum. Digester tank losses are based on the values in this same memorandum, corrected for mesophilic operation in Digesters No. 4 through No. 9 and thermophilic operation in Digesters No. 1 through No. 3.
(3) Building heat demands are based on low air temperatures reflective of the 10th percentile of historic low temperatures in Madison, Wisconsin in each month and totalized for an annual demand.

Table 2.6 Current and Future Thermal Demands for Conversion to Thermophilic Digestion

	Current (Year 2020) Demand	Projected (Year 2050) Demand
Steam Heat - Digestion(1) (MMBtu/year)	29,600	38,800
Hot Water Heat - Digestion(2) (MMBtu/year)	32,100	37,200
Hot Water Heat - Struvite Drying (MMBtu/year)	5,600	6,700
Hot Water Heat - Buildings(3) (MMBtu/year)	40,700	47,000
Total (MMBtu/year)	108,000	129,700

Notes:
(1) Based on sludge flows/loads to reflect digester feed flow of 218,000 gpd in 2020 and projected feed flow of 291,000 gpd in 2050.
(2) Sludge heating based on summer and winter conditions for sludge heating as defined in Applied Technologies' 2011 Design Memorandum No. 5: 11th Addition to the NSWTP. Methane Phase mesophilic and thermophilic sludge heating demands for spring and fall are estimated as averages between the summer and winter values because sludge-specific information was provided only for summer and winter in the referenced memorandum. Digester tank losses are based on the values in this same memorandum, corrected for thermophilic operation in Digesters 1-9.
(3) Building heat demands are based on low air temperatures reflective of the 10th percentile of historic low temperatures in Madison, Wisconsin in each month and totalized for an annual demand.

Table 2.7 Current and Future Thermal Demands for Implementing Biosolids Drying

	Current (Year 2020) Demand	Projected (Year 2050) Demand
Steam Heat - Digestion(1) (MMBtu/year)	29,600	38,800
Hot Water Heat - Digestion(2) (MMBtu/year)	14,300	15,000
Hot Water Heat - Biosolids Drying(4) (MMBtu/year)	96,000	132,000
Hot Water Heat - Struvite Drying (MMBtu/year)	5,600	6,700
Hot Water Heat - Buildings(3) (MMBtu/year)	40,700	47,000
Total (MMBtu/year)	186,200	239,500

Notes:
(1) Based on sludge flows/loads to reflect digester feed flow of 218,000 gpd in 2020 and projected feed flow of 291,000 gpd in 2050.
(2) Sludge heating based on summer and winter conditions for sludge heating as defined in Applied Technologies' 2011 *Design Memorandum No. 5: 11th Addition to the NSWTP*. Methane Phase mesophilic and thermophilic sludge heating demands for spring and fall are estimated as averages between the summer and winter values because sludge-specific information was provided only for summer and winter in the referenced memorandum. Digester tank losses are based on the values in this same memorandum, corrected for mesophilic operation in Digesters 4-9 and thermophilic operation in Digesters 1-3.
(3) Building heat demands are based on low air temperatures reflective of the 10th percentile of historic low temperatures in Madison, Wisconsin in each month and totalized for an annual demand.
(4) Based on 2021 Biosolids Management Plan and modified for years 2020 and 2050.

Heat demands were determined from a variety of sources, including *Technical Memorandum 1.3: 2020 Energy Baseline* (TM 1.3), Applied Technologies' 2011 *Design Memorandum No. 5: 11th Addition to the NSWTP*, Applied Technologies' 2012 *Plant Hot Water Systems Needs: 11th Addition Memorandum*, the EnergyModelBase2013 - Excess Heat MS Excel file developed by MMSD staff to estimate the plant's energy demands under various conditions, historic weather data for Madison, Wisconsin, and data provided by MMSD on Ostara dryer run time.

2.3.4 Summary

Thermal demands are anticipated to increase by approximately 19 percent when comparing the baseline to year 2050. Converting Digesters No. 4 through No. 9 to all thermophilic digestion increases thermal demand by approximately 21 percent above the baseline. Biosolids drying would have a substantial impact on energy use by more than doubling the thermal demand above the baseline and would require significant natural gas usage.

2.4 Conclusion

Both biogas production and thermal demands are projected to increase between now and 2050. Historical data and documentation were used to establish baseline production and demands for current conditions and to serve as a reference point for future projections. In addition to projections for the baseline condition, alternative future conditions that could influence both biogas production and thermal demands were considered, they are as follows: projected influent loadings based on the LP2 NSWTP projections through 2050, operational changes such as the elimination of the biogas-driven blower and HVAC upgrades, potential conversion to fully thermophilic operation, and potential future biosolids drying. Biogas production projections were developed based on future influent BOD loading projections, assuming an equivalent growth rate. The biogas production projections are expected to increase by 28 percent under the baseline condition and up to 45 percent under the hauled waste condition.

Thermal demand projections were developed for building thermal demands and process thermal demands. Building thermal demands are separated into two categories: ventilation heating and envelope heating. The projections for each were developed based on building modeling and proposed ventilation rates per the 2021 Facility HVAC Study, respectively. Consistent with the approach to biogas projections, the process thermal demands were estimated based on the projected digester feed flows/loads. When combined, the overall thermal demands are projected to increase by a minimum of 19 percent for the baseline condition and up to 29 percent for the biosolids drying condition between 2020 and 2050.

APPENDIX C

TECHNICAL MEMORANDUM 3 - EXISTING INFRASTRUCTURE EVALUATION

Madison Metropolitan Sewerage District

Heat and Power Improvements Facilities Plan

TECHNICAL MEMORANDUM 3

Existing Infrastructure Evaluation

FINAL / April 2025

carollo

STRAND ASSOCIATES

Madison Metropolitan Sewerage District

Heat and Power Improvements Facilities Plan

TECHNICAL MEMORANDUM 3

Existing Infrastructure Evaluation

FINAL / April 2025

Digitally signed by Lindsey I. Busch
Contact Info: Carollo Engineers Inc.
Date: 2025.05.01 12:18:15-05'00'

Contents

TM 3 EXISTING INFRASTRUCTURE EVALUATION

3.1 Purpose and Scope 3-1
3.1.1 Relationship to the Asset Registry 3-1
3.2 Asset Overview 3-1
3.2.1 Biogas System 3-1
3.2.2 Thermal Heating System 3-2
3.3 Existing Infrastructure Evaluation 3-3
3.3.1 Blower Building No. 1 3-3
3.3.2 Boiler Building 3-8
3.3.3 Sludge Control Building No. 1 3-10
3.3.4 Sludge Control Building No. 2 3-10
3.3.5 Sludge Control Building No. 3 3-17
3.3.6 Gas Control Building 3-18
3.3.7 WAS Thickening Building 3-19
3.3.8 Operations Building 3-20
3.3.9 Gas Treatment 3-20
3.3.10 Other 3-23
3.3.11 Summary of Evaluation Results 3-24

Appendices

APPENDIX 3A FULL MMSD ASSET REGISTRY

Tables

Table 3.1 Blower Building No. 1 Biogas System Equipment Summary 3-4
Table 3.2 Blower Building No. 1 Thermal System Equipment Summary 3-6
Table 3.3 Boiler Building Thermal System Equipment Summary 3-8
Table 3.4 Sludge Control Building No. 1 Biogas System Equipment Summary 3-10
Table 3.5 Sludge Control Building No. 1 Thermal System Equipment Summary 3-10
Table 3.6 Sludge Control Building No. 2 Biogas System Equipment Summary 3-11
Table 3.7 Sludge Control Building No. 2 Thermal System Equipment Summary 3-15
Table 3.8 Sludge Control Building No. 3 Biogas System Equipment Summary 3-17
Table 3.9 Sludge Control Building No. 3 Thermal System Equipment Summary 3-17
Table 3.10 Gas Control Building Biogas System Equipment Summary 3-18
Table 3.11 WAS Thickening Building Biogas System Equipment Summary 3-19
Table 3.12 Operations Thermal System Equipment Summary 3-20
Table 3.13 Gas Treatment Skid Biogas System Equipment Summary 3-20
Table 3.14 Miscellaneous Biogas System Equipment Summary 3-23

Figures

Figure 3.1	Consolidated Condition Scores for all Biogas Assets by Building	3-2
Figure 3.2	Consolidated Condition Scores for all Thermal Assets by Building	3-3
Figure 3.3	Broken Frame Bracing on Blower Discharge Silencer	3-4
Figure 3.4	Corrosion on Radiator Core Header	3-5
Figure 3.5	Corrosion on Radiator Fan Housing	3-5
Figure 3.6	Leaking Pumps in Blower Building No.1	3-7
Figure 3.7	Mineral Buildup of Heating Hot Water System	3-9
Figure 3.8	Leakage on Engine 1	3-12
Figure 3.9	Insulation in Poor Condition on Engine 2	3-12
Figure 3.10	Corrosion on Radiator Piping Connection	3-13
Figure 3.11	Shell Failure of the Non-Heat Recovery Exhaust Silencer for Engine 2	3-13
Figure 3.12	Corrosion on the Inlet of Non-Heat Recovery Exhaust Silencer for Engine 2	3-14
Figure 3.13	Lube Oil Pump Noted to be Leaking	3-16
Figure 3.14	Biological Growth Formation on the Glycol Chiller	3-21
Figure 3.15	Iron Staining on the Side of the H2S and Siloxane Removal Vessels	3-22

Abbreviations

@	at
Btu	British thermal unit
cf	cubic feet
cfm	cubic feet per minute
EMMP	Energy Management Master Plan
ft	foot/feet
gpm	gallons per minute
H_2S	Hydrogen Sulfide
hp	horsepower
hr	hour
kW	kilowatt
lb	pound(s)
MMSD	Madison Metropolitan Sewerage District's
N/A	not applicable
No.	number
NSWTP	Nine Springs Wastewater Treatment Plant
psig	pounds per square inch gauge
SCB1	Sludge Control Building No.1
SCB2	Sludge Control Building No.2
SCB3	Sludge Control Building No.3
TDH	total dynamic head
TM	Technical memorandum
WAS	waste activated sludge
WS 3	Workshop 3

TM 3 EXISTING INFRASTRUCTURE EVALUATION

3.1 Purpose and Scope

The purpose of this Technical Memorandum (TM) is to document the existing infrastructure evaluation, including a review of condition, capacity, and functionality of plant assets. The existing infrastructure evaluation is developed based on the Madison Metropolitan Sewerage District's (MMSD) asset registry coupled with the asset condition inspections and feedback received from MMSD staff per the site walk conducted for Workshop 3 (WS 3) on September 25, 2024. TM 3 identifies and describes present concerns with aging energy infrastructure and operational challenges at Nine Springs Wastewater Treatment Plant (NSWTP). The information summarized in TM 3 will serve as a fundamental and comprehensive resource for critical asset information to guide and inform the subsequent phases of the project.

The scope of the existing infrastructure evaluation summarized in this TM includes the review of the biogas and thermal heating systems and supporting or ancillary assets and equipment. Major assets and asset groups in the scope include, but are not limited to, the following: hot water system, boilers, steam system, engine generators, blower engine, biogas treatment, and biogas conveyance. Assets were also evaluated holistically to understand bottlenecks and system interdependencies that currently present challenges and negatively impact operability and level of service across the full range of operating conditions encountered that could be addressed as part of this project.

3.1.1 Relationship to the Asset Registry

MMSD has an extensive asset registry that contains valuable information about existing infrastructure including condition, expected equipment life, and criticality. The existing infrastructure evaluation summarized in this TM builds on this information with product data (manufacturer, capacity, and motor size) collected during the walkthrough where available and applicable. The product data is essential for Phases 2 and 3 of the project, which will include evaluating alternatives for both the biogas and thermal heating systems, developing conceptual designs, and sizing equipment. The product data will aid in identifying which assets require replacement and how to most effectively marry new and old equipment, while maximizing the amount of old equipment that can be reused for a given alternative.

3.2 Asset Overview

3.2.1 Biogas System

The chart in Figure 3.1 is a consolidated representation of biogas assets and their associated condition score. Condition scores are derived primarily from those assigned by MMSD with some scores adjusted based on takeaways from the site visit and asset review. The key for the scores is as follows:

- 1 – Excellent.
- 2 – Good.
- 3 – Fair.
- 4 – Poor.
- 5 – Very Poor.

The number above each column represents the number of assets for a given building with a given score. A comprehensive list of all biogas assets and condition scores is provided in Appendix 3A.

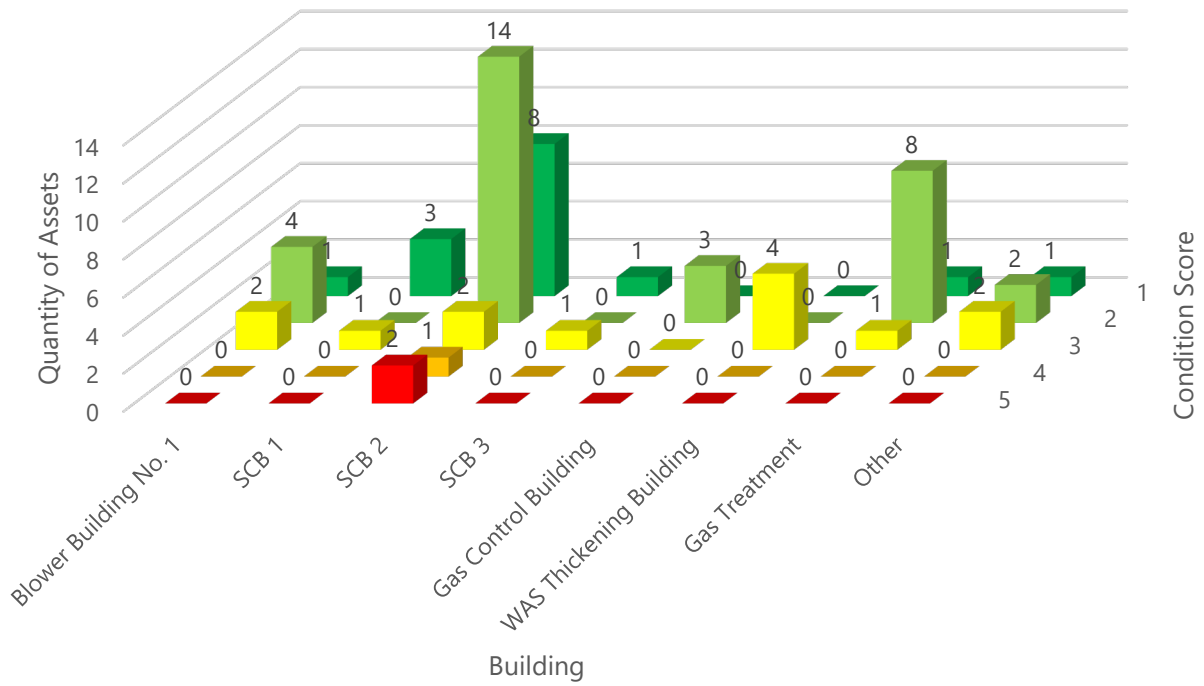

Figure 3.1 Consolidated Condition Scores for all Biogas Assets by Building

Per the consolidated biogas asset scores, most of the assets scored as good condition or better, with only 13 assets scoring as fair, one asset scoring as poor, and two assets scoring a 5 or very poor.

3.2.2 Thermal Heating System

Like the biogas assets, Figure 3.2 presents a visual depiction of the asset condition scores for all the thermal items from the asset list in Appendix 3A. Based on existing site conditions reviewed during the walkthrough and feedback from the maintenance staff, there were no thermal assets in the provided asset list judged to be in very poor condition, and the only items that scored a 4 or poor condition were pumps associated with the hot water system in Blower Building No. 1 and Sludge Control Building No. 2 (SCB2) that were noted to leak glycol. Other than those assets, all other assets scored as fair or above, with most in good condition.

Figures 3.1 and 3.2 serve to provide a high-level snapshot of the current state and condition of the biogas and thermal system assets, respectively. The following sections take the asset condition scoring a step further by adding system-wide context, as informed by the existing infrastructure evaluation, to illustrate a comprehensive picture of the existing heat and power infrastructure.

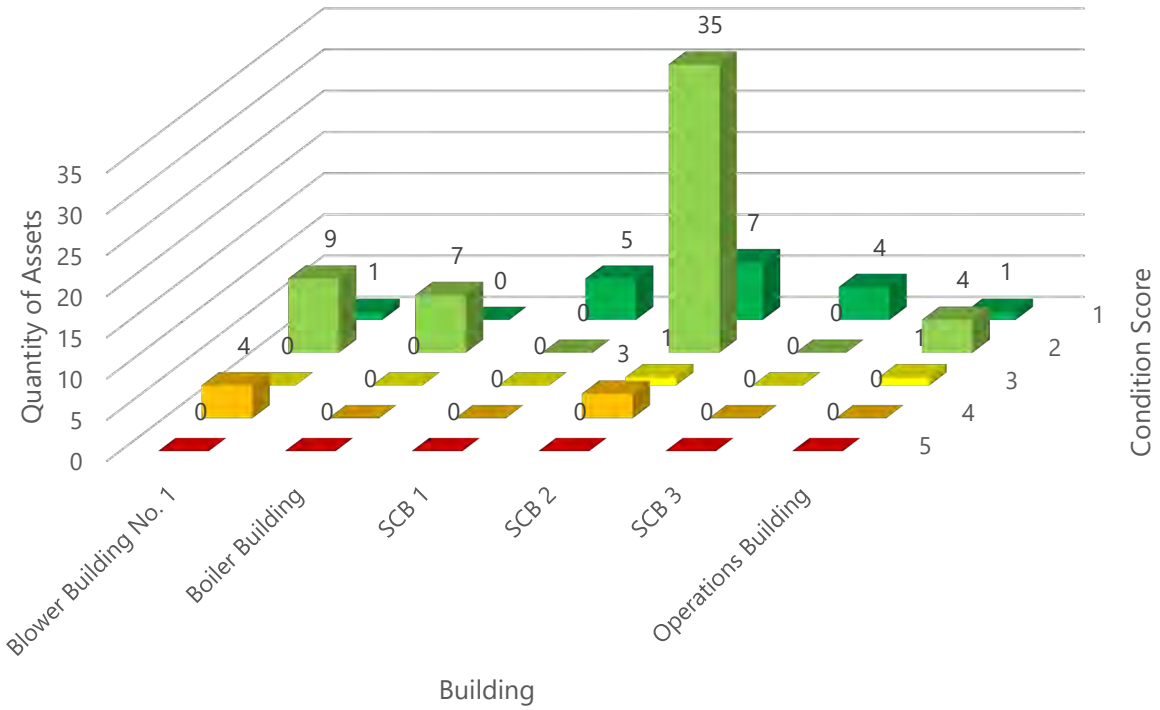

Figure 3.2 Consolidated Condition Scores for all Thermal Assets by Building

3.3 Existing Infrastructure Evaluation

The heat and power infrastructure at NSWTP is aging and suffers from systemic inefficiencies and underperforming and mismatched assets that hinder operability and level of service, necessitating rehabilitation, replacement, or modification to operation through this project. In addition to condition scores, other evaluation inputs and metrics are essential to fully capture the state and outlook of the heat and power systems such as useful life remaining, if any, operation and maintenance requirements, and operational challenges, among others. The following existing infrastructure evaluation is organized by building and summarizes the notes, observations, and feedback from the site walk conducted for this project supplemented with those from previous evaluations, particularly the 2020 Energy Management Master Plan (EMMP). In addition to the product data for the major biogas and thermal assets, key assets that are involved in or the source of existing plant-wide heat and power issues that limit system performance are highlighted and discussed. Furthermore, if left unaddressed, the adverse impacts and limiting effects these assets can have on future operations for certain alternatives are also noted, which will have implications on the alternatives evaluations in the next phases of the project.

3.3.1 Blower Building No. 1

Blower Building No. 1 contains seven biogas assets and 14 thermal assets that were reviewed. Most were in good condition, however, four thermal assets were considered to be in poor condition. Key items of note are summarized herein, remaining assets and all condition scores are listed in Appendix 3A.

3.3.1.1 Biogas Assets

The major biogas assets from Blower Building No. 1 and their product data are summarized in Table 3.1.

Table 3.1 Blower Building No. 1 Biogas System Equipment Summary

Equipment Tag No.	Equipment Type	Manufacturer	Capacity	Motor Size
Waukesha Engine, Blower 1, C431	Blower Engine	Waukesha		1025 hp
Blower Unit 1, C431, Gas	Blower	Dresser Roots	11,000 cfm	
Radiator, Jacket Water	Radiator	Smithco		2 hp
Radiator, Lube Oil Coolant	Radiator	Smithco		2 hp

Notes:
cfm - cubic feet per minute; hp - horsepower.

During the site visit, MMSD staff noted that the blower engine was fully overhauled in the last two years, not including controls. The engine is observed to be in overall good condition with some fluid leaks or spills observed. The wooden access platform on one side of the engine is not properly supported and is recommended to be replaced as soon as possible with stanchions supported at the concrete foundation. It was also observed that the frame bracing supporting the blower discharge silencer is broken through, requiring repair or replacement, as shown in Figure 3.3. Additionally, MMSD staff noted that the radiator coatings are in poor condition and recoating is needed. Furthermore, corrosion was observed on the fan housings, core bolt heads, and on the uninsulated steel piping between the wall and the jacket water radiator, as depicted in Figures 3.4 and 3.5.

Figure 3.3 Broken Frame Bracing on Blower Discharge Silencer

Figure 3.4 Corrosion on Radiator Core Header

Figure 3.5 Corrosion on Radiator Fan Housing

3.3.1.2 Level of Service and Operability

Per feedback from the engine manufacturer, Waukesha, the engine blower can feasibly remain in operation into the future provided it is regularly maintained and rebuilt as needed. Moreover, the engine has been fully overhauled in the last two years. The engine blower general structure is in moderate shape and maintenance staff have little issue with the major components such as the pistons and shafts. Gaskets and valves, however, are failing at an increasing rate. Leaking lube and oil are observable from several points on the engine. The engine is past its expected life span and the frequency of engine maintenance and rebuilds could increase with time creating a potential operational bottleneck in the future if the engine is taken out of service with greater regularity. The engine blower is a primary end-user of biogas and when taken offline, that biogas must either be rerouted to other destinations or flared, adding another layer of operational complexity, while potentially wasting a valuable product.

MMSD prioritizes the biogas feed to the engine blower and therefore it typically has sufficient pressure. However, the engine blower is physically far from the rest of the biogas using-assets, which lowers the overall biogas distribution efficiency and sometimes results in the blower dropping out due to low system pressure from the long biogas distribution pipe. If the engine blower were taken out of service, such as with Pathway 1 or 2, that would free up biogas for other uses, while reducing the gas system control complexity, simplifying distribution and system operation, and reducing overall gas travel distances.

The engine blower also generates a noise nuisance that forces MMSD to always send exhaust to the exhaust heat exchangers, recovering heat off the engine even during times of the year when it's not needed due to low process heat demands. The surplus of heat recovered has a ripple effect on the rest of the thermal heating system, particularly on the west boiler operation and west loop temperature management, especially when the adsorption chiller is not running. The noise issues from the engine blower are a deficiency that is driving a suboptimal and counterproductive operational strategy that is causing undue stress and adaptation at other parts of the plant.

Aside from needing to be recoated, it was reported that the radiators are undersized for the engine, designed to only dump approximately 60-70 percent of the total generated heat. In summer, the radiators combined with the lube and jacket water heat exchangers cannot extract enough heat from the engine. Staff are required to open all the windows and doors to increase ventilation within the room to help cool the unit. If a singular component fails, it could shut down the entire system as each heat exchanger or the radiators cannot dump enough heat without all units in operation. The undersized radiators limit potential output because they cannot keep the engine cool when operated at higher capacity and the dependence on the combination of the heat exchangers and radiators for cooling and the lack of redundancy puts the entire system at constant risk.

3.3.1.3 Thermal Assets

The major thermal assets from Blower Building No. 1 and their product data are summarized in Table 3.2.

Table 3.2 Blower Building No. 1 Thermal System Equipment Summary

Equipment Tag No.	Equipment Type	Manufacturer	Capacity	Motor Size
Jacket Water	Heat Exchanger		2,000,000 Btu/hr	N/A
Engine Lube Oil Coolant	Heat Exchanger			N/A
Engine Exhaust	Heat Exchanger			N/A

Equipment Tag No.	Equipment Type	Manufacturer	Capacity	Motor Size
Pumping Unit 5, Lube Oil	Pump			
Pumping Unit 4, Lube Oil	Pump			
Pumping Unit 5, Jacket Water	Pump	Taco	480 gpm @ 100 ft TDH	20 hp
Pumping Unit 4, Jacket Water	Pump	Taco	480 gpm @ 100 ft TDH	20 hp

Notes:
Btu - British thermal unit; ft - feet; gpm - gallons per minute; hr - hour; N/A - not applicable; No. - number; TDH - total dynamic head.

Figure 3.6 Leaking Pumps in Blower Building No.1

Level of Service and Operability

There is a minimal quantity of thermal assets in the blower building. The heat exchangers for the jacket water, lube oil, and engine exhaust are original and have not received any major upgrades or maintenance. These heat exchangers are serving past typical service life and show signs of wear in line with their age. Per MMSD staff, the jacket water pumps circulating glycol between the jacket water heat exchanger and blower 1 were noted to leak glycol. During the site review one pump was observed to be leaking, see Figure 3.6. These pumps have received upgrades and replacement parts. Even with these upgrades the pumps require additional maintenance. MMSD staff indicated the control valves related to

the flow of hot water though the heat exchangers are prone to failure. This lack of control can result in heat being supplied to the hot water system when there is low or no demand.

As discussed in the biogas assets section, heat is recovered from the engine even during times of the year when the hot water loop does not need heat due to low process heat demands. The surplus of heat recovered disrupts the temperature profile of the west and central hot water loops. This results in the west boilers, located in the boiler building, cycling. Removing the engine blower from the hot water system will allow heat to be generated at a central location and reduce temperature hunting and fluctuations on the hot water system.

3.3.2 Boiler Building

The Boiler Building contains one biogas asset and seven thermal assets that were reviewed. All were in good condition at the time of review. Key items of note are summarized herein, remaining assets and all condition scores are listed in Appendix 3A.

3.3.2.1 Biogas Assets

No notable observations were made, or feedback received regarding the biogas assets reviewed from this building.

3.3.2.2 Thermal Assets

The major thermal assets from the Boiler Building and their product data are summarized in Table 3.3.

Table 3.3 Boiler Building Thermal System Equipment Summary

Equipment Tag No.	Equipment Type	Manufacturer	Capacity	Motor Size
Boiler Unit 1, B34757	Boiler	Cleaver Brooks	5,230,000 Btu/hr	N/A
Boiler Unit 2, B34758	Boiler	Cleaver Brooks	5,230,000 Btu/hr	N/A
Boiler Unit 3, B34759	Boiler	Cleaver Brooks	5,230,000 Btu/hr	N/A
Pumping Unit 1, E881	Pump	Bell & Gossett	450 gpm @ 30 ft TDH	3 hp
Pumping Unit 2, E882	Pump	Bell & Gossett	450 gpm @ 30 ft TDH	3 hp
Pumping Unit 3, E883	Pump	Bell & Gossett	450 gpm @ 30 ft TDH	3 hp

During the site visit, it was noted by maintenance staff that the boilers have had less operation issues since the controls upgrade. Staff indicated some tubes have been replaced at different times but there has never been a full replacement of the tubes. These boilers are 40 years old and are operating beyond the expected life. There are pumps associated with each boiler along with pumps serving the central and west loops in the Boiler building. The pumps are operational but serving past their typical service life. Mineral buildup was observed on pipe accessories and pump connections throughout the site as shown in Figure 3.7.

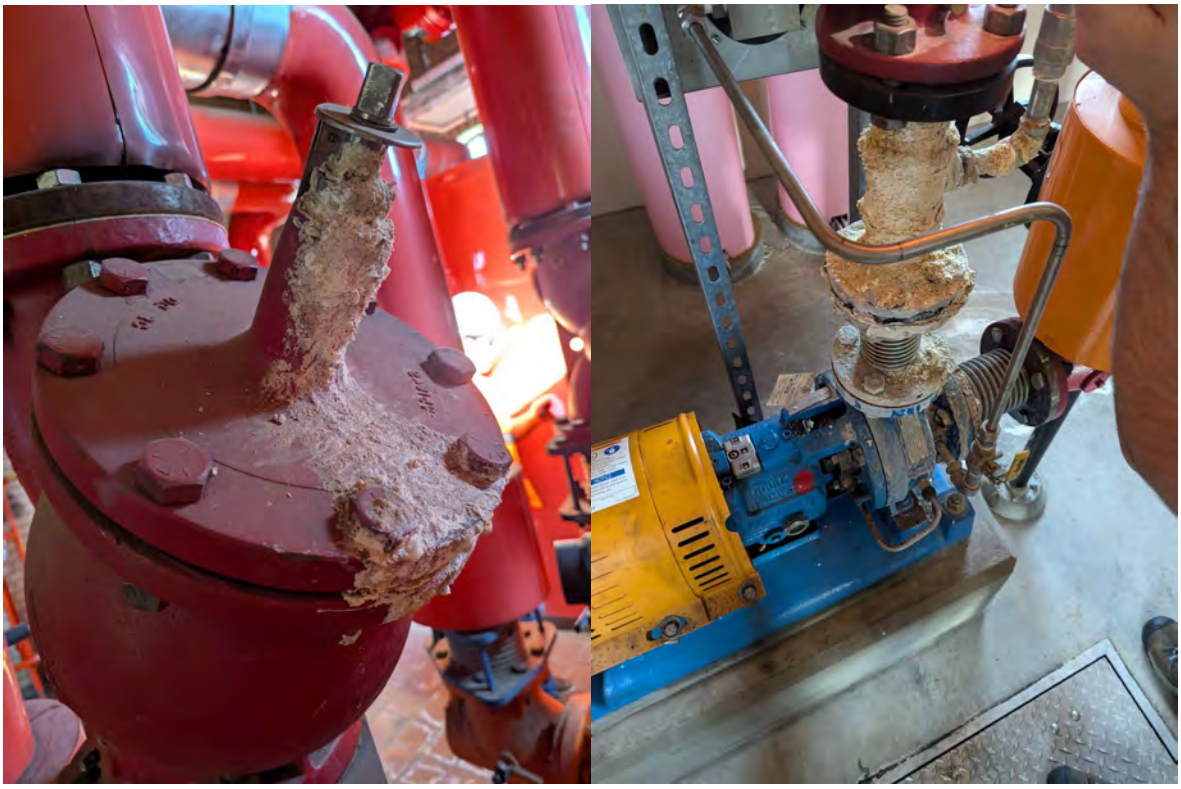

Figure 3.7 Mineral Buildup of Heating Hot Water System

Level of Service and Operability

Thermal assets in the structure are currently operating well. MMSD staff indicated that as pumps, motors, and valves have failed they have been replaced or upgraded. Therefore, the system contains equipment from various eras of installation. MMSD has been able to service and repair items within the boiler building, but there is concern the required repairs and upgrades needed to permit the system to continue to operate will become more frequent and costly due to the age of the existing equipment.

The boilers had a controls upgrade to improve the system operation. This permits the three existing boilers in the boiler building to stage and alternate, but this new control system is not integrated with the other heat generating assets throughout the site. This lack of integration can result in operational issues with maintaining temperature in the hot water loops.

The struvite drying process was noted to drop the temperature of the central loop when it operates. This occurs in the winter on the colder days of the year. The loop temperature drops so low that at times the struvite process is shut off to maintain loop temperature. The issue related to the central loop temperature dropping below acceptable temperatures involves multiple items including, large pressure drop in the existing buried piping, undersized hot water distribution pumps, and experiencing low gas pressure availability at the boilers.

3.3.3 Sludge Control Building No. 1

Sludge Control Building No.1 (SCB1) contains four biogas assets and five thermal assets that were reviewed. Most were in good condition. Key items of note are summarized herein, remaining assets and all condition scores are listed in Appendix 3A.

3.3.3.1 Biogas Assets

The major biogas assets from SCB1 and their product data are summarized in Table 3.4.

Table 3.4 Sludge Control Building No. 1 Biogas System Equipment Summary

Equipment Tag No.	Equipment Type	Manufacturer	Capacity	Motor Size
Piping and Non-Asset Valves, Digester Gas	Piping			N/A

The gas piping appeared to be in good visual condition and showed no obvious signs of deterioration, but it was noted that some of the valves do not seal well. MMSD staff reported that the pipes have additional capacity available (designed for 130 percent capacity). The biogas piping connects several process buildings, which offers flexibility for the location of biogas using equipment.

Level of Service and Operability

There are minimal biogas assets in SCB1 and no feedback was received that revealed present capacity or operational challenges. There were not any concerns expressed that these assets would pose capacity or operational challenges in the future either.

3.3.3.2 Thermal Assets

The major thermal assets from SCB1 and their product data are summarized in Table 3.5.

Table 3.5 Sludge Control Building No. 1 Thermal System Equipment Summary

Equipment Tag No.	Equipment Type	Manufacturer	Capacity	Motor Size
Heat Exchanger 1, E827	Heat Exchanger	Alfa Laval	1,100,000 Btu/hr	N/A
Heat Exchanger 2, E828	Heat Exchanger	Alfa Laval	1,100,000 Btu/hr	N/A
Heat Exchanger 3, E829	Heat Exchanger	Alfa Laval	1,100,000 Btu/hr	N/A

Level of Service and Operability

The heat exchangers and associated pumps are in good condition. The heat exchangers and pumps were noted to operate well. There were no capacity or operation issues with building heat or process equipment thermal demands noted.

3.3.4 Sludge Control Building No. 2

SCB2 contains 27 biogas assets and 46 thermal assets that were reviewed. Most were in good condition, however, two biogas assets were considered in very poor condition, and three thermal assets were considered in poor condition. Key items of note are summarized herein, the remaining assets and all condition scores are listed in Appendix 3A.

3.3.4.1 Biogas Assets

The major biogas assets from SCB2 and their product data are summarized in Table 3.6.

Table 3.6 Sludge Control Building No. 2 Biogas System Equipment Summary

Equipment Tag No.	Equipment Type	Manufacturer	Capacity	Motor Size
Engine Generator, Unit 1	Engine Generator	Waukesha	475 kW	1025 hp
Engine Generator, Unit 2	Engine Generator	Waukesha	475 kW	1025 hp
Radiator Unit 1, G905, Engine 1	Radiator	Smithco		7.5 hp
Radiator Unit 1, G906, Engine 2	Radiator	Smithco		7.5 hp
Silencer, Exhaust, Heat Recovery, Hot Water, Engine 1	Silencer	Maxim	165 psig	N/A
Silencer, Exhaust, Heat Recovery, Hot Water, Engine 2	Silencer	Maxim	165 psig	N/A
Silencer, Exhaust, Non-Heat Recovery, Engine 1	Silencer			N/A
Silencer, Exhaust, Non-Heat Recovery, Engine 2	Silencer			N/A
Gas Booster Unit 1, E081	Gas Booster	Gardner Denver		15 hp
Gas Booster Unit 2, E082	Gas Booster	Gardner Denver		15 hp
Gas Booster Unit 3, E083	Gas Booster	Gardner Denver		15 hp
Piping and Non-Asset Valves, Natural Gas	Piping			N/A
Piping and Non-Asset Valves, Digester Gas	Piping			N/A
Control Panel, Engine Generator 1, New 2023	Control Panel		N/A	N/A
Control Panel, Engine Generator 1, New 2022	Control Panel		N/A	N/A

Notes:
kW - kilowatt; psig - pounds per square inch gauge.

Per MMSD staff, the engines were overhauled, including controls, in the last two years and appeared to be in good condition. Some leaks of oil or lube were observed, as pictured in Figure 3.8. It was also noted that some piping insulation for both engines is failing or failed as presented in Figure 3.9 and needs replacement or refurbishment.

The condition issues for the engine generator radiators were like those for the engine blower radiators with the radiator coatings in poor condition and the radiators in need of recoating. Significant corrosion was observed on the fan housings, core and core bolt heads, and flanges at the water inlet and discharge locations, as depicted in Figure 3.10.

Corrosion and rust were observed on both the heat recovery and non-heat recovery exhaust silencers. The sidewalls on the non-heat recovery exhaust silencer for engine 2 are wrinkling/collapsing as shown in Figure 3.11. Furthermore, the extreme corrosion on that silencer has resulted in the welds at the inlet rusting through and leaking exhaust resulting in extra noise as pictured in Figure 3.12. It was noted by MMSD staff, though, that the engine silencers will be replaced next year.

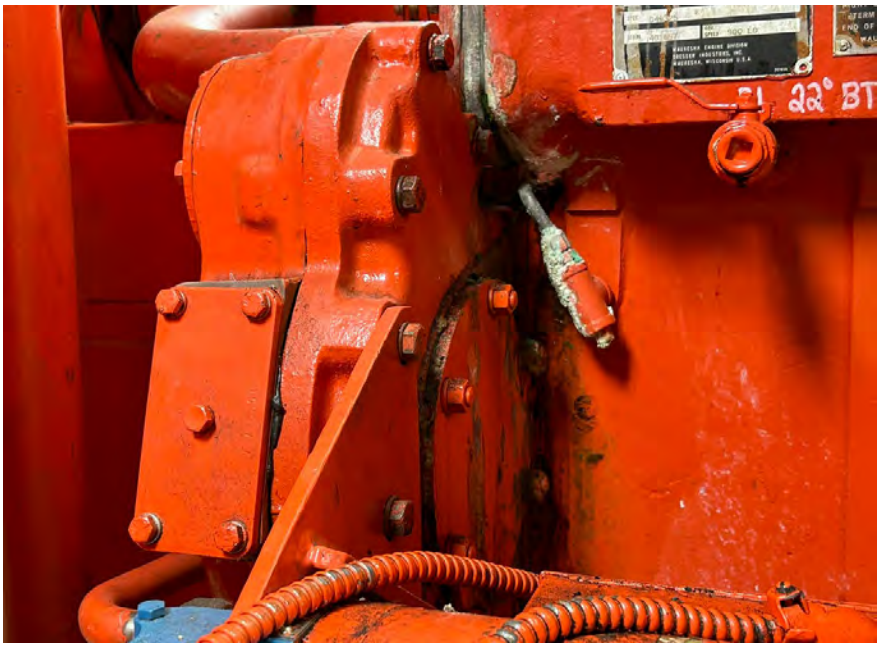

Figure 3.8 Leakage on Engine 1

Figure 3.9 Insulation in Poor Condition on Engine 2

Figure 3.10 Corrosion on Radiator Piping Connection

Figure 3.11 Shell Failure of the Non-Heat Recovery Exhaust Silencer for Engine 2

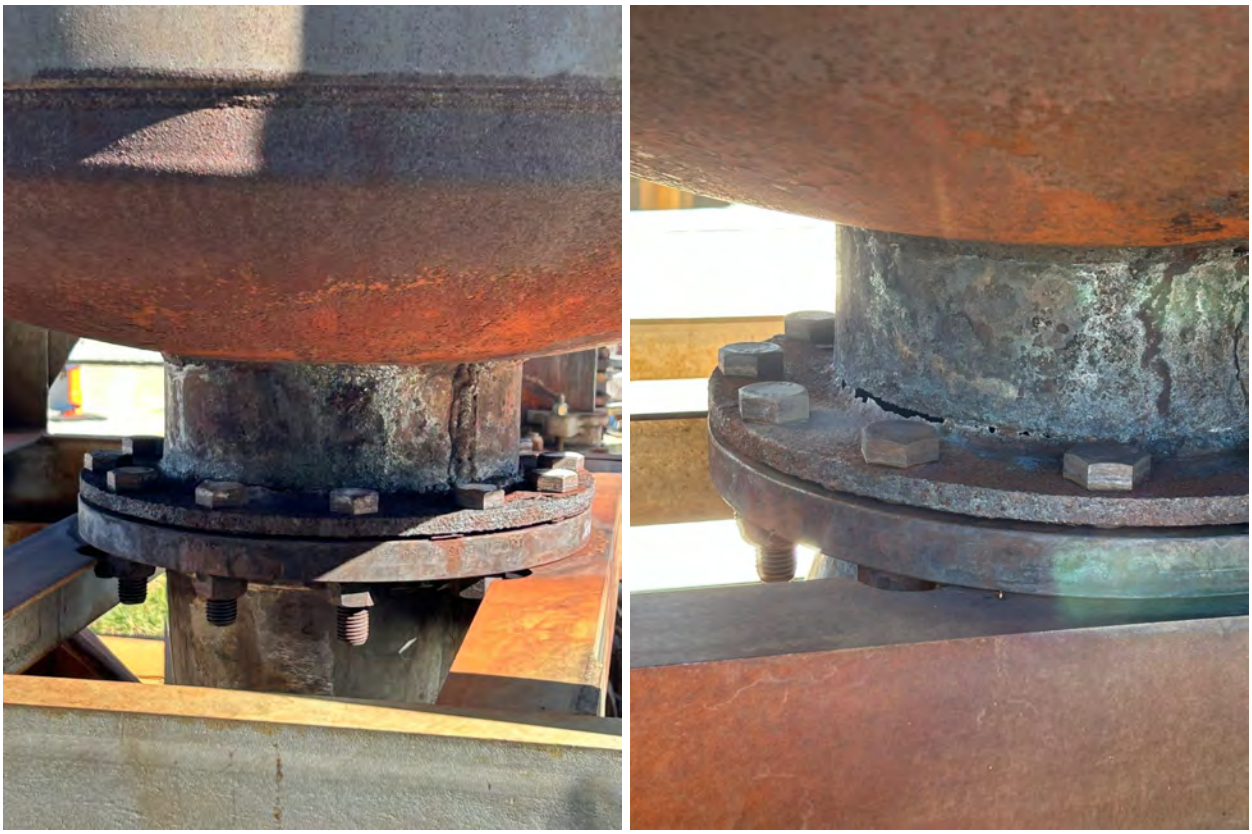

Figure 3.12 Corrosion on the Inlet of Non-Heat Recovery Exhaust Silencer for Engine 2

Level of Service and Operability

Like the engine blower, the engine generators can feasibly remain in operation into the future provided they are regularly maintained and rebuilt as needed, with the added benefit that they were fully overhauled in the last two years. But also like the engine blower, the engine generators are exceeding their expected life span, which could lead to more frequent maintenance and rebuilds required with continued operation. The engines have been rebuilt at least four times already and maintenance teams noted increasing wear on bearings and mechanical components despite following Wisconsin Department of Natural Resources recommendations for maintenance practices. Increased downtime could have wide-ranging implications across the system if the engines need to be taken out of service more often, such as reduced electrical output and heat recovery off the engines, along with increased flaring of biogas. In addition, as rich burn engines, their methane-to-power conversion efficiency is around 27 percent, which is on the low end relative to modern technologies and their lean burn counterparts, further justifying either replacement or removal.

Consistent with the issues noted for the engine blower radiators, the engine generator radiators are also undersized. The radiators are designed to dissipate only 60-70 percent of the total heat produced by the engines. This has resulted in operational challenges, particularly in the summer when process thermal demands are low, as the radiators have difficulty dumping enough heat to maintain stable operating temperatures. Staff are forced to turn down engine speed to reduce thermal loading to the radiators, which reduces biogas demand, but can also lead to increased flaring during periods of low process

thermal demand. The radiators are a limiting factor that directly impacts how the engines are operated and place a cap on generator output because they cannot be operated at full capacity due to limitations on the amount of heat that can be radiated.

Aside from the substantial rust on the silencers, the existing exhaust stacks present operability limitations. Manual valves control the routing of exhaust flow. When hot water demands require the use of the exhaust heat exchanger, staff need to manually direct flow accordingly and vice versa.

3.3.4.2 Thermal Assets

The major thermal assets from SCB2 and their product data are summarized in Table 3.7.

Table 3.7 Sludge Control Building No. 2 Thermal System Equipment Summary

Equipment Tag No.	Equipment Type	Manufacturer	Capacity	Motor Size
Boiler Unit 4, B80772	Boiler	Unilux Boiler Corp	9,670,000 Btu/hr	N/A
Boiler Unit 5, B80771	Boiler	Unilux Boiler Corp	9,670,000 Btu/hr	N/A
Boiler Unit 6, B80770	Boiler	Unilux Boiler Corp	9,670,000 Btu/hr	N/A
Heat Exchanger 04	Heat Exchanger	Alfa Laval		N/A
Heat Exchanger 05	Heat Exchanger	Alfa Laval		N/A
Heat Exchanger 06	Heat Exchanger	Alfa Laval		N/A
Heat Exchanger 07	Heat Exchanger	Lackeby		N/A
Heat Exchanger 08	Heat Exchanger	Lackeby		N/A
Heat Exchanger 09	Heat Exchanger	Lackeby		N/A
Heat Exchanger 10	Heat Exchanger	Lackeby		N/A
Heat Exchanger 11	Heat Exchanger	Lackeby		N/A
Heat Exchanger 12	Heat Exchanger	Lackeby		N/A
Jacket Water, Engine 1	Heat Exchanger	Taco	2,000,000 Btu/hr	N/A
Lube Oil Coolant , Engine 1	Heat Exchanger			N/A
Jacket Water, Engine 2	Heat Exchanger	Taco	2,000,000 Btu/hr	N/A
Lube Oil Coolant, Engine 2	Heat Exchanger			N/A
Pumping Unit 1, Lube Oil Coolant	Pump	Taco		
Pumping Unit 2, Lube Oil Coolant	Pump	Taco		
Pumping Unit 3, Lube Oil Coolant	Pump	Taco		
Boiler 4 Pump, E084P	Pump	Bell & Gossett	510 gpm @ 22 ft TDH	7.5 hp
Boiler 5 Pump, E085P	Pump	Bell & Gossett	510 gpm @ 22 ft TDH	7.5 hp
Boiler 6 Pump, E086P	Pump	Bell & Gossett	510 gpm @ 22 ft TDH	7.5 hp
Pumping Unit 1, G961	Pump	Bell & Gossett	1,020 gpm @ 48 ft TDH	20 hp
Pumping Unit 2, G962	Pump	Bell & Gossett	1,020 gpm @ 48 ft TDH	20 hp

The boilers are in good condition. These boilers have less runtime because the engine generators are commonly meeting the demands of the hot water system. Therefore, they appear in better condition compared to equipment of a similar age.

The jacket water and lube oil heat exchangers were in good physical condition and maintenance staff noted they operate well and require little maintenance.

The lube oil pumps were noted to leak glycol as shown in Figure 3.13. The boiler pumps and the hot water system circulating pumps all appear in good working condition.

Figure 3.13 Lube Oil Pump Noted to be Leaking

Level of Service and Operability

Thermal assets in the structure are currently operating well. As pumps, motors, and valves have failed they have been replaced or upgraded. Therefore, the system contains equipment from various eras of installation. The jacket water and lube oil heat exchangers are serving past typical service life. Amot thermostatic control valves control the hot water to and from the jacket water and lube oil heat exchangers. Maintenance staff noted these valves have frequent issues with sticking open or closed, making control of the thermal energy on site increasingly difficult. Because of the complexity, quantity, and variety of eras of thermal assets within this structure there is concern the system will require frequent maintenance and upgrades to continue operating.

The boilers had a controls upgrade to improve the system operation. Similar to the Boiler Building this permits the three existing boilers in SCB2 to stage and alternate, but this new control system is not integrated with the other heat generating assets throughout the site. The boilers were noted to rarely run as the heat recovered from the engines is able to handle the thermal demands of the system. Although the boilers in SCB2 run infrequently they are unable to supply heat to the west/central hot water loop from the east hot water loop. The current piping and pumping arrangement is not sufficiently sized to transport the flow of water necessary to transport heat throughout the entire site. For this reason, the west/central and east hot water loops operate mostly independent of one another.

The piping arrangement in the building makes it difficult to control where and how much heat is added to the hot water loop from the jacket water and lube oil heat exchangers. There is one pump within this building that supplies hot water to the tunnel. The piping arrangement for this pump and how it connects to the system make it challenging to appropriately balance the distribution of hot water flow and heat to this building and the tunnel.

There were no capacity, operation, or serviceability issues with building heat or process equipment thermal demands noted for SCB2.

3.3.5 Sludge Control Building No. 3

Sludge Control Building No. 3 (SCB3) contains two biogas assets and four thermal assets that were reviewed. Most were in excellent condition. Key items of note are summarized herein, the remaining assets and all condition scores are listed in Appendix 3A.

3.3.5.1 Biogas Assets

The major biogas assets from SCB3 and their product data are summarized in Table 3.8.

Table 3.8 Sludge Control Building No. 3 Biogas System Equipment Summary

Equipment Tag No.	Equipment Type	Manufacturer	Capacity	Motor Size
Waste Gas Burner/Flare	Flare	Varec Biogas		N/A
Piping and Non-Asset Valves, Digester Gas	Piping	Varec, misc.		N/A

It was noted that the back pressure regulator was recently replaced, though MMSD may be well advised to add a second one. Based on site walk observations, the condition of the waste gas burner was judged to be fair.

Level of Service and Operability

MMSD staff noted that, while the waste gas burner has an automatic start, operators have been manually controlling start and stop due to a leak on the regulating diaphragm. The presence of the leak prevents flare operation unless manually called to run by operators. Furthermore, the regulator is oversized to flare small quantities of gas. As a result, operators will often adjust the opening pressure to relieve small amounts of gas when needed, such as under excess conditions. While a serviceable workaround, the pressure setpoint needs to be adjusted back up to avoid over-flaring when there is no excess. The manual adjustments required by operators that must be made at the regulator to ensure appropriate flaring mean the flare is not automatically controlling the amount of gas being flared as intended. The manual intervention required for running the waste gas burner and adjusting the regulator is a nuisance to operators and a hindrance to overall operability of the system.

3.3.5.2 Thermal Assets

The major thermal assets from SCB3 and their product data are summarized in Table 3.9.

Table 3.9 Sludge Control Building No. 3 Thermal System Equipment Summary

Equipment Tag No.	Equipment Type	Manufacturer	Capacity	Motor Size
Heat Exchanger 13, J230	Heat Exchanger	Alfa Laval	1,600,000 Btu/hr	N/A
Heat Exchanger 14, J231	Heat Exchanger	Alfa Laval	1,600,000 Btu/hr	N/A

Level of Service and Operability

The heat exchangers and associated pumps are in good condition. The heat exchangers and pumps were noted to operate well. There were no capacity or operation issues with building heat or process equipment thermal demands noted.

3.3.6 Gas Control Building

The Gas Control Building contains three biogas assets that were reviewed. All were in good condition. Key items of note are summarized herein, all condition scores are listed in Appendix 3A.

3.3.6.1 Biogas Assets

The major biogas assets from the Gas Control Building and their product data are summarized in Table 3.10.

Table 3.10 Gas Control Building Biogas System Equipment Summary

Equipment Tag No.	Equipment Type	Manufacturer	Capacity	Motor Size
Natural Gas Booster Unit 1, F110	Gas Booster	Hoffman		
Natural Gas Booster Unit 2, F120	Gas Booster	Hoffman		
Natural Gas Blending Unit 1	Gas Blending	Eclipse		N/A

Based on site walk observations, the natural gas boosters and blending system appeared to be in good visual condition.

Level of Service and Operability

The natural gas blending system, though in good visual condition and functioning, negatively impacts the overall biogas system by causing pressure imbalances when in operation. For instance, it can cause high pressure conditions for the west boilers leading them to trip out. The pressure increase at the west boilers can have upstream impacts by limiting throughput on the gas conditioning skid, which can lead to raw biogas being flared while the blending system is adding natural gas. A notable deficiency of the system is that it runs at a fixed speed with manually throttled valves, thus requiring regular manual adjustment to maintain the desired system pressure.

The purpose of the natural gas blending system is to supplement biogas feed when stored biogas is running low. Seasonally, especially in the winter months, the combined biogas and blended gas is not sufficient to meet the current equipment biogas demand. Given the limited capacity and complications the blending system poses to the rest of the biogas system, it downgrades overall level of service and operability when in operation. As part of any recommended modifications from this project, MMSD has expressed they are amenable to removing the natural gas blending system given the challenges currently faced.

3.3.6.2 Thermal Assets

No thermal assets were reviewed from this building.

3.3.7 WAS Thickening Building

The Waste Activated Sludge (WAS) Thickening Building contains four biogas assets that were reviewed. All were in fair condition. Key items of note are summarized herein, all condition scores are listed in Appendix 3A.

3.3.7.1 Biogas Assets

The major biogas assets from the Gas Control Building and their product data are summarized in Table 3.11.

Table 3.11 WAS Thickening Building Biogas System Equipment Summary

Equipment Tag No.	Equipment Type	Manufacturer	Capacity	Motor Size
Steam Boiler Unit 1, J701	Boiler	Fulton	5175 lb of steam/hr	N/A
Steam Boiler Unit 2, J702	Boiler	Fulton	5175 lb of steam/hr	N/A
Steam Boiler Unit 3, J703	Boiler	Fulton	5175 lb of steam/hr	N/A
Steam Boiler Unit 4, J704	Boiler	Fulton	5175 lb of steam/hr	N/A

Notes:
lb - pound(s).

Based on site walk observations, the steam boilers appeared to be in good visual condition.

Level of Service and Operability

The steam boilers were assessed to be in good overall condition, which makes sense given historically light use relative to expectation when first installed. The steam boiler system was originally designed to heat all nine methane phase digesters to thermophilic temperatures, but since its implementation with the 11th Addition, it has not been operated for that function, resulting in excess steam boiler capacity. Instead, the steam heating system has been used for acid phase digester heating by injecting steam into a recirculating sludge stream. The boilers' firing is based on steam demand for the digester heating and due to inconsistent loading, the boilers may fire several times in an hour. The steam boilers can produce a much greater amount of steam at higher pressure if there is the demand for it, but for its current application, the steam heating system is oversized. The excess steam boiler capacity and light wear on the boilers could be a benefit in the future if the alternative future condition for exclusively thermophilic digestion is adopted and the operational strategy changes. If the amount of cycling can be reduced by providing a steadier demand for steam, such as with exclusively thermophilic digestion, then the life of the boiler units can be extended.

Conversely, MMSD did note that the issues currently experienced with the steam boiler system are related to the de-aeration system. Such issues have the potential to lower thermal efficiency and shorten the expected useful life of the steam boilers due to corrosion. The deleterious effects could become more prominent and impactful in a future where all digesters are operated thermophilically.

3.3.7.2 Thermal Assets

No thermal assets were reviewed from this building.

3.3.8 Operations Building

The Operations Building contains seven thermal assets that were reviewed. Most were in good condition. Key items of note are summarized herein, the remaining assets and all condition scores are listed in Appendix 3A.

3.3.8.1 Biogas Assets

No biogas assets were reviewed from this building.

Thermal Assets

The major thermal assets from the Operations Building and their product data are summarized in Table 3.12.

Table 3.12 Operations Thermal System Equipment Summary

Equipment Tag No.	Equipment Type	Manufacturer	Capacity	Motor Size
Absorption Chiller, H871CH02	Chiller	York	2,000,000 Btu/hr	N/A

Level of Service and Operability

The absorption chiller in the Operations Building was noted to operate well. The cooling tower was replaced in 2012. The pumps associated with the absorption chiller were noted by staff to require frequent maintenance. The pathway selected and the resulting modifications made to the hot water system will determine if the absorption chiller is necessary or beneficial in the future.

3.3.9 Gas Treatment

The Gas Treatment Skid contains 10 biogas assets that were reviewed. Most were in good condition. Key items of note are summarized herein, and all condition scores are listed in Appendix 3A.

3.3.9.1 Biogas Assets

The major biogas assets from the Gas Treatment Skid and their product data are summarized in Table 3.13.

Table 3.13 Gas Treatment Skid Biogas System Equipment Summary

Equipment Tag No.	Equipment Type	Manufacturer	Capacity	Motor Size
Tank 301, Sulfurpack Vessel, H_2S Removal	Tank	N/A	N/A	N/A
Tank 361, East, Sag Pack, Siloxane Removal	Tank	N/A	N/A	N/A
Tank 362, West, Sag Pack, Siloxane Removal	Tank	N/A	N/A	N/A
Tank L801, Soda Ash	Tank	N/A	N/A	N/A
Glycol Chiller Unit, L141	Chiller	N/A	N/A	N/A
Blower L401 Aerobic H_2S Removal	Blower	N/A	N/A	N/A

Equipment Tag No.	Equipment Type	Manufacturer	Capacity	Motor Size
Blower, 331, HSI Blower Gas H_2S Removal Booster	Blower	N/A	N/A	N/A
Pumping Unit L801, Soda Ash Injection	Pump	N/A	N/A	N/A
Pumping Unit, Blower, Soda Ash Tank Mixing	Pump	N/A	N/A	N/A
Piping and Non-Asset Valves, Gas Treatment Skid	Piping	N/A	N/A	N/A

Notes:
H_2S - hydrogen sulfide.

The biogas conditioning skid and its subcomponents were observed to be in generally fair condition. Figure 3.14 presents the significant moss or lichen growth found on the glycol chiller unit and associated piping. It was also noted that the motor cooling fan on the glycol pump is detached and spins freely.

Both the H_2S and siloxane removal vessels appeared to be in good visual condition, though all vessels displayed some iron staining, as evidenced by the streaks running down the outer surface, which can be seen in Figure 3.15. It follows that the observed rust is likely due to corrosion of an object at the top of the vessel, such as a pressure relief valve. In addition, the access ladder for the H_2S vessel displayed some corrosion as well. Corrosion was also observed on the gas cooling/heat recovery skid that could be related to apparent floor coating failures. The gas piping and piping insulation on the skid, though, appeared to be in good condition.

Figure 3.14 Biological Growth Formation on the Glycol Chiller

Figure 3.15 Iron Staining on the Side of the H_2S and Siloxane Removal Vessels

Level of Service and Operability

The gas conditioning skid was installed in the early 2000s and is considered to generally be in good visual condition. However, limitations and deficiencies were identified that directly impact operability and performance, which could become more significant impediments to operation in the future if not addressed with a new biogas system. For instance, MMSD noted that plugging on the discharge piping of the H_2S vessel has caused issues with boosting gas to the engine blower and MMSD has experienced challenges with biogas system pressure in general. Though gas distribution could be simplified under alternative biogas end uses, depending on the site layout and the configuration of each, gas boosting would likely remain a priority issue that would need to be addressed with any future system.

Throughput is also an ongoing issue with the existing gas conditioning skid. Aside from posing issues to gas boosting, the plugging on the H_2S vessel also limits system throughput. Moreover, throughput issues can arise due to seasonal factors. During cold days in winter, the condensate in the siloxane removal vessels freezes, fouling the siloxane media, creating throughput issues. Additionally, poor weather can prevent MMSD from changing the spent H_2S removal media. When this occurs, due to the lack of redundancy in the H_2S removal process, MMSD is forced to bypass the H_2S vessel and reduce the capacity of the skid to avoid fouling the siloxane media too rapidly. Another source of throughput issues is the

intra-skid booster, which up until recently, was operating at about service factor rating. To protect the booster from excessive wear, limits have been set in the variable frequency drive to prevent operation at that level, but the downside is reduced total possible throughput.

The aforementioned throughput issues aside, it was also noted that throughput could be increased but is controlled based on media changeout schedule. More gas could be pushed through, but doing so would burn through the media more quickly and result in more frequent media changes. This limit placed on the amount of conditioned gas that is generated limits the amount of gas available to send to end use equipment. At full capacity, the gas conditioning skid can produce enough conditioned gas to fully support demand from the engines, but still not enough to fully meet boiler demand in the winter.

3.3.9.2 Thermal Assets

No thermal assets were reviewed from this structure.

3.3.10 Other

Five miscellaneous, but notable biogas assets were reviewed from other parts of the plant. All assets are considered fair or better. Key items of note are summarized herein, all condition scores are listed in Appendix 3A.

3.3.10.1 Biogas Assets

The major miscellaneous biogas assets and their product data are summarized in Table 3.14.

Table 3.14 Miscellaneous Biogas System Equipment Summary

Equipment Tag No.	Building	Equipment Type	Manufacturer	Capacity	Motor Size
ST01: Tank 1, Sludge Storage	Sludge Storage Tank 1	Tank		32,200 cf	N/A
ST02: Tank 2, Sludge Storage	Sludge Storage Tank 2	Tank		32,200 cf	N/A
SG1: Piping and Non-Asset Valves, Digester Gas	Solids Gallery 1	Piping			N/A
SG2: Piping and Non-Asset Valves, Digester Gas	Solids Gallery 2	Piping			N/A
WASG: Piping and Non-Asset Valves, Digester & Sour Gas	WAS Gallery	Piping			N/A

Notes:
cf - cubic feet.

It was noted by MMSD staff that the moisture traps are not in good condition and in need of rehab. The isolation valves are also in poor condition and no longer operate properly due to age, though it was mentioned that some expansion joints have been replaced.

Level of Service and Operability

The fixed covers on the methane phase digesters do not offer, by nature, any gas storage capacity, thus MMSD relies solely on the floating gas covers on the sludge storage tanks for gas storing needs. Based on MMSD staff feedback, numerous challenges are experienced with the floating gas covers and gas storage that pose issues that could carry over into a new biogas system. It was noted that the thermophilic sludge

is first sent to the sludge storage tanks to cool prior to thickening or dewatering, which leads to considerable struvite development in the tanks. Buoyancy issues between the two tanks were reported, whereby the covers do not float evenly, with one up and one down. As a result, the covers are operated one at a time, cutting maximum gas capacity in half. While biogas storage capacity is not currently an issue, biogas production is projected to increase in the future with increasing organic loading to the facility. Furthermore, the increase in biogas production could be even greater under the alternative future conditions: co-digestion and exclusively thermophilic digestion. Either scenario could test the limits of the existing biogas storage capacity, which is capped substantially below full capacity.

3.3.10.2 Thermal Assets

No thermal assets were reviewed.

3.3.11 Summary of Evaluation Results

3.3.11.1 Biogas System

The results of the existing infrastructure evaluation suggest that the biogas system assets are generally in good to very poor condition and have either been recently replaced or rehabilitated or are scheduled to be in the near future. The following is a summary of notable asset conditions based on observations and feedback received from MMSD staff during the site walk:

- The engine blower and engine generators were noted to be in good physical condition, aside from some minor leaks observed. All three engines were fully overhauled in the last two years, including controls for the engine generators.
- The radiators for the engine blower and engine generators were found to be in poor condition and significant corrosion was observed at various exposed locations. Maintenance staff noted they need to be recoated.
- The heat recovery and non-heat recovery exhaust silencers were considered to be in very poor condition due to extensive corrosion and rust that has already created an exhaust leak on the non-heat recovery exhaust silencer for engine 2 due to extreme deterioration of the inlet welds. The sidewalls for that same silencer are also wrinkling/collapsing, but maintenance staff noted the silencers are due to be replaced next year.
- The gas conditioning skid and its subcomponents were observed to be in generally fair condition.
  - The H_2S and siloxane removal vessels appeared to be in good visual condition except for staining found on the exterior surface that could be from corrosion of an object at the top of those vessels.
  - Biological growth was observed on the glycol chiller and on some piping insulation jacketing, along with observed corrosion of the cooling/heating skid due to coating failures that may warrant addressing in the future.
- The floating gas covers on the sludge storage tanks were replaced with the 11th Addition and noted to be in good visible condition.

While the assets themselves have ranging conditions, holistically, the system is aging and suffers from inefficiencies and deficiencies that limit overall performance. Maintaining the current system arrangement will prolong systemic issues that cannot be solved by simply replacing or repairing assets as they fail. The

following is a summary of notable operational challenges with existing assets that were identified and discussed as part of the existing infrastructure evaluation:

- The engine blower and engine generators are past their expected life span, and if kept in operation under the Null Pathway, it follows that the frequency of engine maintenance and rebuilds could increase with time, a trend already observed, creating an operational bottleneck if the engines need to be taken out of service more often.
- The radiators are undersized for the existing engines and have limited engine cooling capacity that prohibits optimal, full capacity operation, capping current engine output. If left unaddressed, similar issues could be expected with new cogeneration engines.
- Feedback from MMSD on the existing gas conditioning skid highlighted several limitations and bottlenecks impacting operability leading to suboptimal performance.
  - The biogas system experiences pressure challenges due to plugging on the discharge piping of the H_2S vessel which would likely remain an obstacle to navigate with any future biogas system.
  - Throughput is capped due to a combination of mechanical issues and the media changeout schedule resulting in limited conditioned gas available for end uses.
- Feedback on the sludge storage tanks and the floating gas covers revealed issues with struvite formation from thermophilic sludge, buoyancy issues, and reduced gas capacity to half the maximum amount. The reduced biogas storage capacity could be tested and pose an issue in the future as biogas production is expected to increase over time and could be supplemented under an alternative future condition with co-digestion or exclusively thermophilic digestion.

The observations and feedback received from MMSD on the condition of existing biogas assets and the operational challenges they pose will need to be addressed in the next phase for the biogas alternatives evaluation and design considerations to achieve consistent, high performance across the full range of operating conditions encountered at NSWTP.

3.3.11.2 Thermal Heat System

Comments from maintenance staff and on-site observations generally indicate that the thermal heating assets are overall in good condition, however many components of the thermal systems are serving well beyond typical service life and will, in the future, require maintenance and potential replacement. The following is a summary of asset conditions noted or discussed with maintenance staff:

- All the heat exchangers reviewed during the site visit were currently noted to be in good physical condition. Many of the heat exchangers require minimal maintenance but are operating past typical service life.
- Most of the heating hot water pumps are currently operating well. Maintenance staff indicated pumps and pump components are replaced as needed.
- Mineral buildup was noted at different locations on site. This indicates water chemistry has been out of spec at times. This was noted to be regularly monitored and adjusted.
- The west boilers located in the boiler building are operating well beyond typical service life. They require frequent maintenance and upgrades to continue operating.
- Sections of underground hot water piping have been replaced due to failures and leaks. Maintenance staff expressed concerns about the integrity of the existing piping that has not yet been replaced.

- Maintenance staff indicated that the buried piping associated with the north heating hot water loop is failing. Therefore, it is not recommended to connect the north loop with the east, west, and central loop.

In general, the plant has performed maintenance to extend the life of the systems and equipment to serve beyond a typical service life. If the existing assets and systems remain and maintenance issues are addressed as they arise, it is expected that maintenance will become more frequent and costly over time.

In addition to the asset summary, there are a number of operational issues that have been noted. The following is a summary of the operational issues noted or discussed:

- During the winter, the high heat demand and operation of the struvite drying process can combine to lower the central loop supply temperature below acceptable temperature levels. To address this, staff will shut off the struvite drying process to maintain the hot water supply temperature in the central loop. This issue is related to a large pressure drop in the existing buried piping, undersized hot water distribution pumps, and low gas pressure availability at the boilers. The 2020 EMMP discusses how variable instantaneous loads, such as the struvite drying process, can lead to bottlenecks in the system.
- There are periods of time, typically in the coldest parts of winter, when there is not enough biogas pressure to serve the west boilers. When the third boiler is called to run the gas pressure drops, and the boiler shuts off due to low gas pressure.
- Recovered heat from the engine blower or the engine generators is supplied to the hot water system even during times of the year when the hot water loop does not need heat due to low process heat demands. The surplus of heat recovered disrupts the temperature profile of the west and central hot water loops.
- The current piping and pumping arrangement from SCB2 to the boiler building is not sufficiently sized to transport the flow of hot water necessary to heat the entire site. For this reason, the west/central and east hot water loops operate mostly independent of one another. The 2020 EMMP discusses how there is only a single pump in SCB2 that transfers water to the Boiler Building to connect the east loop to the west and central loops.
- There is a lack of an overall hot water control system. This prevents integrating the heat generating assets throughout the site to appropriately stage and modulate equipment to meet the heat demands. The 2020 EMMP discusses how the complexity of the system requires extensive operator knowledge for efficient operation. Troubleshooting problems with the system becomes increasingly difficult as specific personnel are required to understand the current operation of the system.

APPENDIX 3A

FULL MMSD ASSET REGISTRY

Key for scoring:	Condition score	Condition level	Criticality
	1- excellent	1- desktop assessment	2- low
	2- good	2- in the field visual	5- medium
	3- fair	3- in the field diagnostic evaluation	8- high
	4- poor		
	5- very poor		

Building	Asset ID	Asset Description	Asset type	Building	Room	Installed addition	Installed Date	Condition score (MMSD)	Condition score (Carollo/Strand)	Condition level	Criticality
Blower Building No. 1	BLU3801	BB1: Blower Unit 1, C431, Gas	UNIT,BLOWR	BLWR BLDG 1	BLOWER RM	N/A	01-JAN-1991	1		1	8
	CPN3803	BB1: Control Panel, Air/Fuel/Ratio, Blower Engine	PANEL,CON	BLWR BLDG 1	BLOWER RM	N/A	01-JAN-1991	2		1	8
	CPN3808	BB1: Control Panel, Make-Up & Jacket Water Coolant	PANEL,CON	BLWR BLDG 1		N/A	27-FEB-2015	2		1	8
	ENG3801	BB1: Waukesha Engine for Blower 1 C431 (Blower Engine), Blower Building 1	ENG,WAU	BLWR BLDG 1			01-JAN-1991	3	2		8
	MEQ3803	BB1: Heat Exchanger, Jacket Water	HEAT EXCH	BLWR BLDG 1	BLOWER RM	N/A	01-JAN-1991	2		2	8
	MEQ3807	BB1: Radiator, Jacket Water	HEAT EXCH	BLWR BLDG 1	OUTSIDE	N/A	01-JAN-1991	3		2	8
	MEQ3811	BB1: Flame Arrestor, Waukesha Engine	FLAME,ARST	BLWR BLDG 1	BLOWER RM	N/A	01-JAN-1991	2		2	8
	MEQ3812	BB1: Heat Exchanger, Engine, Lube Oil Coolant	HEAT EXCH	BLWR BLDG 1		N/A	01-JAN-1991	1		2	8
	MEQ3814	BB1: Radiator, Lube Oil Coolant	HEAT EXCH	BLWR BLDG 1	OUTSIDE	N/A	01-JAN-1991	4	3	2	8
	MEQ3815	BB1: Heat Exchanger, Engine Exhaust	HEAT EXCH	BLWR BLDG 1	BLOWER RM	N/A	01-DEC-2008	2		2	8
	PMP3805	BB1: Pumping Unit 5, Lube Oil Coolant	PUMP	BLWR BLDG 1		N/A	01-JAN-1991	2		2	8
	PMP3806	BB1: Pumping Unit, Makeup Water Coolant	PUMP	BLWR BLDG 1		N/A	01-JAN-1991	2		2	8
	PMP3807	BB1: Pumping Unit 4, Lube Oil Coolant	PUMP	BLWR BLDG 1		N/A	01-JUL-2001	2		2	8
	PMP3808	BB1: Pumping Unit 5, Jacket Water	PUMP	BLWR BLDG 1		N/A	01-JAN-1991	3	4	2	8
	PMP3811	BB1: Pumping Unit 4, Jacket Water	PUMP	BLWR BLDG 1		N/A	01-JAN-1991	3	4	2	8
	PMP3815	BB1: Pumping Unit, Coolant Recovery	PUMP	BLWR BLDG 1		N/A	01-JAN-1991	2		2	5
	PMP3821	BB1: Pumping Unit 1, Heat Recovery	PUMP	BLWR BLDG 1		6TH ADDITION	01-JUL-1979	2		2	8
	PMP3822	BB1: Pumping Unit, Lube Oil Filling	PUMP	BLWR BLDG 1		N/A	01-JAN-1991	2		2	5
	PPI3819	BB1: Piping, Non-Asset Valves and Drip Pots, Process Gas	PIPING	BLWR BLDG 1		N/A	01-JAN-1991	2		2	8
	PPI3820	BB1: Piping and Non-Asset Valves, Hot Water	PIPING	BLWR BLDG 1		N/A	01-JAN-1991	3	2	1	5
	PPU3814	BB1: Pumping Unit 2, Heat Recovery	PUMP	BLWR BLDG 1		6th ADDITION	01-JUL-1979	3		2	8
Boiler Building	BOI7401	BOI: Boiler Unit 1, E811, SN: L-70180, Tag B34757, ID 615656.	UNIT,BOIL	BOILER BLDG	BOILER RM	6TH ADDITION	15-APR-1982	2		2	5
	BOI7402	BOI: Boiler Unit 2, E812, SN: L-70181, Tag B34758, ID 615657.	UNIT,BOIL	BOILER BLDG	BOILER RM	6TH ADDITION	15-APR-1982	2		2	5
	BOI7403	BOI: Boiler Unit 3, E813, SN: L-70182, Tag B34759, ID 615658.	UNIT,BOIL	BOILER BLDG	BOILER RM	6TH ADDITION	15-APR-1982	2		2	5
	PPI7401	BOI: Piping and Non-Asset Valves, Gas	PIPING	BOILER BLDG	N/A	7th ADDITION	01-JAN-1984	2		2	2
	PPI7411	BOI: Piping and Non-Asset Valves, Hot Water	PIPING	BOILER BLDG	N/A	7th ADDITION	01-JAN-1984	2		2	2
	PPU7415	BOI: Pumping Unit 1, Boiler 1, E881	PUMP	BOILER BLDG	BOILER RM	6th ADDITION	01-JUL-1982	2		1	5
	PPU7416	BOI: Pumping Unit 2, Boiler 2, E882	PUMP	BOILER BLDG	BOILER RM	6th ADDITION	01-JUL-1982	2		1	5
	PPU7417	BOI: Pumping Unit 3, Boiler 3, E883	PUMP	BOILER BLDG	BOILER RM	6th ADDITION	01-JUL-1982	2		1	5
SCB1	CPN4521	SCB1: Control Panel, Level, Sludge Storage Tanks 1 & 2	PANEL,CON	SCB1		07-JUL-2014	07-JUL-2014	1		1	8
	HEX4515	SCB1: Heat Exchanger 1, E827	HEAT EXCH	SCB1	PUMP RM	11TH ADDITION	07-JUL-2014	1		2	5
	HEX4516	SCB1: Heat Exchanger 2, E828	HEAT EXCH	SCB1	PUMP RM	11TH ADDITION	07-JUL-2014	1		2	5
	HEX4517	SCB1: Heat Exchanger 3, E829	HEAT EXCH	SCB1	PUMP RM	11TH ADDITION	07-JUL-2014	1		2	5
	HEX4518	SCB1: Heat Exchanger 1, Storage Tanks , F221	HEAT EXCH	SCB1	PUMP RM	11TH ADDITION	07-JUL-2014	1		2	5
	HEX4519	SCB1: Heat Exchanger 2, Storage Tanks , F222	HEAT EXCH	SCB1	PUMP RM	11TH ADDITION	07-JUL-2014	1		2	5
	PPI4522	SCB1: Piping and Non-Asset Valves, Digester Gas	PIPING	SCB1	N/A	11th ADDITION	07-JUL-2014	3		2	5
	PPU4642	SCB1: Pumping Unit 1, Sludge Transfer, Borger, F201, Storage Tanks, New 2022	UNIT,PUMP	SCB1	PUMP RM	ROTARYLOBE 2020	29-AUG-2022	1		1	5
	PPU4643	SCB1: Pumping Unit 2, Sludge Transfer, Borger, F202, Storage Tanks, New 2022	UNIT,PUMP	SCB1	PUMP RM	ROTARYLOBE 2020	08-DEC-2022	1		1	5
SCB2	ACU4707	SCB2: Gas Booster Unit 1, E081	COMPR,GAS	SCB2	GAS CONTROL RM	10TH ADDITION	22-APR-2005	2		2	5
	ACU4708	SCB2: Gas Booster Unit 2, E082	COMPR,GAS	SCB2	GAS CONTROL RM	10TH ADDITION	22-APR-2005	2		2	5
	ACU4709	SCB2: Gas Booster Unit 3, E083	COMPR,GAS	SCB2	GAS CONTROL RM	10TH ADDITION	22-APR-2005	2		2	5

Building	Asset ID	Asset Description	Asset type	Building	Room	Installed addition	Installed Date	Condition score (MMSD)	Condition score (Carollo/Strand)	Condition level	Criticality
	BOI7404	SCB2: Boiler Unit 4, E084, SN 3582, Tag B80772, ID 1042856	UNIT,BOIL	SCB2	BOILER RM	10TH ADDITION	01-JUL-2006	2		2	5
	BOI7405	SCB2: Boiler Unit 5, E085, SN 3576, Tag B80771, ID 1042857	UNIT,BOIL	SCB2	BOILER RM	10TH ADDITION	01-JUL-2006	2		2	5
	BOI7406	SCB2: Boiler Unit 6, E086, SN 3575, Tag B80770, ID 1042858	UNIT,BOIL	SCB2	BOILER RM	10TH ADDITION	01-JUL-2006	2		2	5
	CPN4606	SCB2: Control Panel, Make-Up Coolant Water System, Engines 1 & 2	PANEL,CON	SCB2	PUMP RM	N/A	01-JUN-1988	3		1	2
	CPN4607	SCB2: Control Panel, Engine Generator 1, New 2023	PANEL,CON	SCB2	OLD ELECTRICAL RM	N/A	03-JAN-2023	1		1	8
	CPN4608	SCB2: Control Panel, Engine Generator 2, New 2022	PANEL,CON	SCB2	OLD ELECTRICAL RM	N/A	02-NOV-2022	1		1	8
	CPN4612	SCB2: Control Panel, ECM, Engine 1, New 2022	PANEL,CON	SCB2	OLD ELECTRICAL RM	N/A	02-NOV-2022	1		1	8
	CPN4613	SCB2: Control Panel, ECM, Engine 2, New 2022	PANEL,CON	SCB2	OLD ELECTRICAL RM	N/A	02-NOV-2022	1		1	8
	GEN4601	SCB2: Engine Generator Unit 1, Waukesha	ENGINATOR	SCB2	GENERATOR RM	N/A	01-JAN-1991	4	2	3	8
	GEN4602	SCB2: Engine Generator Unit 2, Waukesha	ENGINATOR	SCB2	GENERATOR RM	N/A	01-JAN-1991	3	2	2	8
	HEX4504	SCB2: Heat Exchanger, HEX-04, Sludge	HEAT EXCH	SCB2	PUMP RM	6TH ADDITION	01-JUL-1979	2		2	5
	HEX4505	SCB2: Heat Exchanger, HEX-05, Sludge	HEAT EXCH	SCB2	PUMP RM	6TH ADDITION	01-JUL-1979	2		2	5
	HEX4506	SCB2: Heat Exchanger, HEX-06, Sludge	HEAT EXCH	SCB2	PUMP RM	6TH ADDITION	01-JUL-1979	2		2	5
	HEX4507	SCB2: Heat Exchanger, HEX-07, Sludge	HEAT EXCH	SCB2	HEAT EXCHANGER RM	10TH ADDITION	01-JUL-2006	2		2	5
	HEX4508	SCB2: Heat Exchanger, HEX-08, Sludge	HEAT EXCH	SCB2	HEAT EXCHANGER RM	10TH ADDITION	01-JUL-2006	2		2	5
	HEX4509	SCB2: Heat Exchanger, HEX-09, Sludge	HEAT EXCH	SCB2	HEAT EXCHANGER RM	10TH ADDITION	01-JUL-2006	2		2	5
	HEX4510	SCB2: Heat Exchanger, HEX-10, Sludge	HEAT EXCH	SCB2	HEAT EXCHANGER RM	10TH ADDITION	01-JUL-2006	2		2	5
	HEX4511	SCB2: Heat Exchanger, HEX-11, Sludge	HEAT EXCH	SCB2	HEAT EXCHANGER RM	10TH ADDITION	01-JUL-2006	2		2	5
	HEX4512	SCB2: Heat Exchanger, HEX-12, Sludge	HEAT EXCH	SCB2	HEAT EXCHANGER RM	10TH ADDITION	01-JUL-2006	2		2	5
	MEQ4603	SCB2: Heat Exchanger, Jacket Water, Engine 1	HEAT EXCH	SCB2	PUMP RM	N/A	01-JAN-1991	2		2	8
	MEQ4604	SCB2: Radiator Unit 1, Jacket Water-Lube Oil Coolant, G905, Engine 1	HEAT EXCH	SCB2	ROOF	N/A	01-JAN-1991	4		2	8
	MEQ4607	SCB2: Heat Exchanger, Lube Oil Coolant, Engine 1	HEAT EXCH	SCB2	PUMP RM	N/A	01-JAN-1991	2		1	8
	MEQ4611	SCB2: Heat Exchanger, Jacket Water, Engine 2	HEAT EXCH	SCB2	PUMP RM	N/A	01-JAN-1991	2		1	8
	MEQ4625	SCB2: Heat Exchanger, Lube Oil Coolant, Engine 2	HEAT EXCH	SCB2	PUMP RM	N/A	01-JAN-1991	2		1	8
	MEQ4628	SCB2: Silencer, Exhaust, Heat Recovery, Hot Water, Engine 1	EQP,MISC	SCB2	ROOF	10TH ADDITION	01-JUL-2006	2		2	5
	MEQ4629	SCB2: Radiator Unit 2, Jacket Water-Lube Oil Coolant, G906, Engine 2	HEAT EXCH	SCB2	ROOF	N/A	01-JAN-1991	2	3	2	8
	MEQ4630	SCB2: Silencer, Exhaust, Heat Recovery, Hot Water, Engine 2	EQP,MISC	SCB2	ROOF	10TH ADDITION	01-JUL-2006	2		2	5
	MEQ4636	SCB2: Silencer, Exhaust, Non-Heat Recovery, Engine 1	EQP,MISC	SCB2	ROOF	10TH ADDITION	01-JUL-2006	2	5	2	5
	MEQ4637	SCB2: Silencer, Exhaust, Non-Heat Recovery, Engine 2	EQP,MISC	SCB2	ROOF	10TH ADDITION	01-JUL-2006	2	5	2	5
	MWS4601	SCB2: Coolant Water Makeup System, Generators	SYSTEM	SCB2	PUMP RM	N/A	01-JAN-1991	2		1	5
	PMP4601	SCB2: Pumping Unit 1, Jacket Water	PUMP	SCB2	PUMP RM	N/A	05-OCT-2006	2		2	5
	PMP4603	SCB2: Pumping Unit 1, Lube Oil Coolant	PUMP	SCB2	PUMP RM	N/A	05-OCT-2006	2	4	2	5
	PMP4605	SCB2: Pumping Unit 2, Jacket Water	PUMP	SCB2	PUMP RM	N/A	01-JUL-2020	1	2	1	5
	PMP4606	SCB2: Pumping Unit 2, Lube Oil Coolant	PUMP	SCB2	PUMP RM	N/A	01-JUL-2005	2	4	2	5
SCB2	PMP4607	SCB2: Pumping Unit 3, Jacket Water	PUMP	SCB2	PUMP RM	N/A	30-NOV-2018	2		2	5
	PMP4608	SCB2: Pumping Unit 3, Lube Oil Coolant	PUMP	SCB2	PUMP RM	N/A	01-JAN-1991	2	4	2	5
	PMP4612	SCB2: Pumping Unit 2A, Hot Water, Heat Recovery, Lube Oil , G981	PUMP	SCB2	PUMP RM	11TH ADDITION	21-MAY-2013	2		2	5
	PMP4613	SCB2: Pumping Unit 2B, Hot Water, Heat Recovery, Lube Oil, G982	PUMP	SCB2	PUMP RM	11TH ADDITION	21-MAY-2013	2		2	5
	PPI4511	SCB2: Piping and Non-Asset Valves, Hot Water	PIPING	SCB2	N/A	6th ADDITION	01-JAN-1979	3		1	5
	PPI4601	SCB2: Piping and Non-Asset Valves, Digestors Gas	PIPING	SCB2	N/A	10th ADDITION	01-JUL-2006	2		2	2
	PPI4603	SCB2: Piping and Non-Asset Valves, Lube Oil Coolant	PIPING	SCB2	N/A	10th ADDITION	01-JUL-2006	2		1	2
	PPI4604	SCB2: Piping and Non-Asset Valves, Jacket Water Coolant	PIPING	SCB2	N/A	10th ADDITION	01-JUL-2006	2		1	2
	PPI4605	SCB2: Piping and Non-Asset Valves, Natural Gas	PIPING	SCB2	N/A	10th ADDITION	01-JUL-2006	2		1	2
	PPU4549	SCB2: Pumping Unit, Hot Water, G932, Heat Exchanger 12	PUMP	SCB2	HEAT EXCHANGER RM	10TH ADDITION	01-JUL-2006	2		2	5
	PPU4551	SCB2: Pumping Unit 1, Sludge Transfer, J023, Digester 7	UNIT,PUMP	SCB2	HEAT EXCHANGER RM	11th ADDITION	01-JUN-2013	1		2	5
	PPU4552	SCB2: Pumping Unit 2, Sludge Transfer, J024, Digester 7	UNIT,PUMP	SCB2	HEAT EXCHANGER RM	11th ADDITION	01-JUN-2013	1		2	5
	PPU4567	SCB2: Pumping Unit, Hot Water, G931, Heat Exchanger 11	PUMP	SCB2	HEAT EXCHANGER RM	10TH ADDITION	01-JUL-2006	2		1	5
	PPU4569	SCB2: Pumping Unit 2, Hot Water, Thermo Heat Recovery, HEX 8-10, G929	PUMP	SCB2	HEAT EXCHANGER RM	10TH ADDITION	01-JUL-2006	2		2	5
	PPU4570	SCB2: Pumping Unit 1, Hot Water, Thermo Heat Recovery, HEX 8-10, G928	PUMP	SCB2	HEAT EXCHANGER RM	10TH ADDITION	01-JUL-2006	2		2	5
	PPU4574	SCB2: Pumping Unit, Hot Water, E084P, Boiler 4	PUMP	SCB2	BOILER RM	10TH ADDITION	01-JUL-2006	2		1	5
	PPU4575	SCB2: Pumping Unit, Hot Water, E085P, Boiler 5	PUMP	SCB2	BOILER RM	10TH ADDITION	01-JUL-2006	2		1	5
	PPU4576	SCB2: Pumping Unit, Hot Water, E086P, Boiler 6	PUMP	SCB2	BOILER RM	10TH ADDITION	01-JUL-2006	2		1	5
	PPU4577	SCB2: Pumping Unit, Hot Water, G927, Heat Exchanger 7	PUMP	SCB2	HEAT EXCHANGER RM	10TH ADDITION	01-JUL-2006	2		1	5
	PPU4609	SCB2: Pumping Unit 1, Hot Water, Secondary Loop, Heat Recovery, Jacket Water & Exhaust, G911	PUMP	SCB2	PUMP RM	10TH ADDITION	01-JUL-2006	2		1	5
	PPU4610	SCB2: Pumping Unit 2, Hot Water, Secondary Loop, Heat Recovery, Jacket Water & Exhaust, G912	PUMP	SCB2	PUMP RM	10TH ADDITION	01-JUL-2006	2		1	5
	PPU4611	SCB2: Pumping Unit 3, Hot Water, Secondary Loop, Heat Recovery, Jacket Water & Exhaust, G913	PUMP	SCB2	PUMP RM	10TH ADDITION	01-JUL-2006	2		1	5
	PPU7423	SCB2: Pumping Unit 1, Hot Water, G961, East Loop	PUMP	SCB2	BOILER RM	10th ADDITION	01-JUL-2006	2		1	5
	PPU7424	SCB2: Pumping Unit 2, Hot Water, G962, East Loop	PUMP	SCB2	BOILER RM	10th ADDITION	01-JUL-2006	2		1	5
	VLV4533	SCB2: Valve & Actuator, Cooling Water, Lube Oil Heat Exchanger, G908, Engine 2	VALVE	SCB2	PUMP RM	10TH ADDITION	01-JUL-2006	1		1	5
	VLV4534	SCB2: Valve & Actuator, Hot Water, Supply, G923, Heat Exchanger 7	VALVE	SCB2	PUMP RM	10TH ADDITION	01-JUL-2006	2		2	5
	VLV4535	SCB2: Valve & Actuator, Hot Water, Supply, G924, Heat Exchanger 11	VALVE	SCB2	PUMP RM	10TH ADDITION	01-JUL-2006	1		1	5
	VLV4536	SCB2: Valve & Actuator, Hot Water, Supply, G925, Heat Exchanger 12	VALVE	SCB2	PUMP RM	10TH ADDITION	01-JUL-2006	1		1	5
	VLV4537	SCB2: Valve & Actuator, Mixing, Hot Water, Thermo Heat Recovery, G953	VALVE	SCB2	PUMP RM	10TH ADDITION	01-JUL-2006	1		2	5
	VLV4538	SCB2: Valve & Actuator, Hot Water, Thermo Heat Exchangers, G955	VALVE	SCB2	PUMP RM	10TH ADDITION	01-JUL-2006	1		1	5
	VLV4540	SCB2: Valve & Actuator, Cooling Water, Lube Oil Heat Exchanger, G907, Engine 1	VALVE	SCB2	PUMP RM	10TH ADDITION	01-JUL-2006	1		1	5
	VLV4601	SCB2: Valve & Actuator, Mixing, Hot Water, Secondary Loop, After Jacket Water Heat Exchanger, Er	VALVE	SCB2	PUMP RM	10TH ADDITION	01-JUL-2006	2		1	5
	VLV4603	SCB2: Valve & Actuator, Mixing, Hot Water, Secondary Loop, After Jacket Water Heat Exchanger, Er	VALVE	SCB2	PUMP RM	N/A	01-JAN-2014	2		2	5
	VLV4619	SCB2: Valve & Actuator, Hot Water, Supply, Heat Exchanger 4, New 2023	VALVE	SCB2	PUMP RM	N/A		1		1	5
	VLV4620	SCB2: Valve & Actuator, Hot Water, Supply, Heat Exchanger 6, New 2023	VALVE	SCB2	PUMP RM	N/A		1		1	5
	VLV4621	SCB2: Valve & Actuator, Hot Water, Supply, Heat Exchanger 5, New 2023	VALVE	SCB2	PUMP RM	N/A		1		1	5

Building	Asset ID	Asset Description	Asset type	Building	Room	Installed addition	Installed Date	Condition score (MMSD)	Condition score (Carollo/Strand)	Condition level	Criticality
SCB3	HEX4513	SCB3: Heat Exchanger 13, J230, HEX-13	HEAT EXCH	SCB3	HEAT EXCHANGER RM	11TH ADDITION	14-JUN-2013	1		2	5
	HEX4514	SCB3: Heat Exchanger 14, J231, HEX-14	HEAT EXCH	SCB3	HEAT EXCHANGER RM	11TH ADDITION	14-JUN-2013	1		2	5
	MEQ4750	NSWP: Waste Gas Burner/Flare, North of SCB3	EQP,MISC	NINE SPRINGS WWTP	N/A	11TH ADDITION	01-JAN-2013	1	3	2	8
	PPI4541	SCB3: Piping and Non-Asset Valves, Digester Gas	PIPING	SCB3	N/A	11th ADDITION	14-JUN-2013	1		2	5
	VLV4571	SCB3: Valve & Actuator, Hot Water, Heat Exchanger 13, J216	VALVE	SCB3	PUMP RM	11TH ADDITION	14-JUN-2013	1		2	2
	VLV4572	SCB3: Valve & Actuator, Hot Water, Heat Exchanger 14, J217	VALVE	SCB3	PUMP RM	11TH ADDITION	14-JUN-2013	1		2	2
Gas Control Building	ACU4701	GCB: Natural Gas Booster Unit 1, F110	COMPR,GAS	GAS CNTR BLDG	GAS CONTROL RM	8TH ADDITION	01-JUL-1993	2		2	5
	ACU4704	GCB: Natural Gas Booster Unit 2, F120	COMPR,GAS	GAS CNTR BLDG	GAS CONTROL RM	8TH ADDITION	01-JUL-1993	2		2	5
	ACU4705	GCB: Natural Gas Blending Unit 1	COMPR,GAS	GAS CNTR BLDG	GAS CONTROL RM	8TH ADDITION	01-JUL-1993	2		2	5
WAS Thickening Building	BOI4201	WTB: Steam Boiler Unit 1, J701, SN: F1045429A, Tag B0095909, ID 1444895.	UNIT,BOIL	WAS THICKENING BLD			07-OCT-2013	3		2	5
	BOI4202	WTB: Steam Boiler Unit 2, J702, SN: F1045427A, Tag B0095912, ID 1444897.	UNIT,BOIL	WAS THICKENING BLD			07-OCT-2013	3		2	5
	BOI4203	WTB: Steam Boiler Unit 3, J703, SN: F1045430A, Tag B0095907, ID 1444896.	UNIT,BOIL	WAS THICKENING BLD			07-OCT-2013	3		2	5
	BOI4204	WTB: Steam Boiler Unit 4, J704, SN: F1045428A, Tag B0095908, ID 1444899.	UNIT,BOIL	WAS THICKENING BLD			07-OCT-2013	3		2	5
Ops Building	CPN5405	OB: Control Panel, PLC, CP-025, H560 Hot Water System, Chiller Rm 021	PANEL,CON	OPS BLDG	021		01-JAN-2012	3		1	2
	MEQ5441	OB: Chiller, Electric, H871CH01, Tag R013979	HVAC	OPS BLDG	030		01-JAN-2012	1		1	2
	MEQ5443	OB: Chiller, Absorption, H871CH02	HVAC	OPS BLDG	021		01-JAN-2012	1	2	1	2
	PPI5401	OB: Piping and Non-Asset Valves, Hot Water	HVAC	OPS BLDG				2		1	2
	VLV5413	OB: Valve & Actuator, Hot Water Mixing, H871TCV01, to/from Absorption Chiller, H871CH02	VALVE	OPS BLDG	021		01-JAN-2012	2		1	2
	VLV5417	OB: Valve & Actuator, Hot Water Supply, H871FV05, to Absorption Chiller, H871CH02	VALVE	OPS BLDG	021		01-JAN-2012	2		1	2
	VLV5419	OB: Valve & Actuated, Hot Water Supply, H560FV03, to AHU 510/520, Chiller Rm 021	VALVE	OPS BLDG	021		01-JAN-2012				2
Gas Treatment	ACU4710	GasTreat: Glycol Chiller Unit, L141, Tag R013980	AIR COND	GAS TREATMENT			01-JUL-2008	2	3	2	8
	BLO4701	GasTreat: Blower L401 Aerobic H2S Removal, Gas Treatment	UNIT,BLOWR	GAS TREATMENT				2			8
	BLO4704	GasTreat: Blower, 331, HSI Blower Gas H2S Removal Booster, New 2013	UNIT,BLOWR	GAS TREATMENT			01-JAN-2013	2			8
	PMP4707	OSB: Pumping Unit, Blower, Soda Ash Tank Mixing, New 2011	PUMP	OIL STORGE BLDG			01-JAN-2011	2		2	8
	PPI4702	GasTreat: Piping and Non-Asset Valves, Gas Treatment Skid	PIPING	GAS TREATMENT			01-JUL-2008	2		2	8
	PPU4703	OSB: Pumping Unit L801, Soda Ash Injection, Gas Treatment Skid	UNIT,PUMP	OIL STORGE BLDG			01-JUL-2008	2		2	8
	TNK4701	GasTreat: Tank 301, Sulfrpack Vessel, H2S Removal	TANK,STOR	GAS TREATMENT				2		2	8
	TNK4702	GasTreat: Tank 361, East, Sag Pack, Silaxone Removal	TANK,STOR	GAS TREATMENT				2		2	8
	TNK4703	GasTreat: Tank 362, West, Sag Pack, Silaxone Removal	TANK,STOR	GAS TREATMENT				2		2	8
	TNK4705	GasTreat: Tank L801, Soda Ash, Gas Teatment. Oil Storage Bld.	TANK,STOR	GAS TREATMENT				1		2	8
Other	PPI4507	SG1: Piping and Non-Asset Valves, Digester Gas	PIPING	SOLIDS GLRY 1	N/A	11th ADDITION		2		2	2
	PPI4537	WASG: Piping and Non-Asset Valves, Digester & Sour Gas	PIPING	WAS GALLERY	WAS GALLERY	11th ADDITION		1		1	2
	PPI4549	SG2: Piping and Non-Asset Valves, Digester Gas	PIPING	SOLIDS GLRY 2	N/A	11th ADDITION		2		2	2
	TNK4507	ST02: Tank 2, Sludge Storage, Concrete Structure, Cover & location	TANK,STOR	ST02			01-MAY-1936	3		2	2
	TNK4506	ST01: Tank 1, Sludge Storage, Concrete Structure, Cover & location	TANK,STOR	ST01			01-MAY-1936	3		2	2

APPENDIX D

TECHNICAL MEMORANDUM 4 - BIOGAS EVALUATION

Madison Metropolitan Sewerage District

Heat and Power Improvements Facilities Plan

TECHNICAL MEMORANDUM 4

Biogas Evaluation

FINAL / December 2025

Madison Metropolitan Sewerage District

Heat and Power Improvements Facilities Plan

TECHNICAL MEMORANDUM 4

Biogas Evaluation

FINAL / December 2025

Digitally signed by Lindsey I. Busch
Date: 2025.12.09 11:57:07-06'00'

WISCONSIN
LINDSEY I. BUSCH
E-45234-6
MADISON
WIS.
PROFESSIONAL ENGINEER

Contents

TM 4 BIOGAS EVALUATION

4.1 Purpose and Scope 4-1
4.2 Financial Market Considerations 4-1
4.2.1 Renewable Energy Certificates 4-2
4.2.2 Renewable Fuel Standard Program 4-3
4.2.3 International Sustainability and Carbon Certification 4-4
4.2.4 Voluntary Markets 4-5
4.2.5 Inflation Reduction Act Production Tax Credit 4-5
4.3 Planning Criteria 4-6
4.3.1 Capital and Life Cycle Cost Assumptions 4-6
4.3.2 Decision Making Criteria 4-8
4.4 Null Pathway 4-8
4.4.1 Energy Impacts 4-10
4.4.2 Waste Gas Burner Capacity 4-11
4.5 Pathway 1 - Cogeneration Evaluation 4-11
4.5.1 Basis of Design 4-12
4.5.2 Capital and Life Cycle Costs 4-29
4.6 Pathway 2 - Renewable Natural Gas Evaluation 4-33
4.6.1 Renewable Natural Gas Interconnect 4-34
4.6.2 Basis of Design 4-36
4.6.3 Capital and Life Cycle Costs 4-46
4.7 Decision Criteria 4-49
4.7.1 Financial considerations 4-49
4.7.2 Operations and Maintenance 4-50
4.7.3 Implementation 4-52
4.7.4 Other 4-52
4.8 Recommendations 4-54

Appendices

APPENDIX 4A PROJECT COST ESTIMATES
APPENDIX 4B VENDOR PROPOSALS
APPENDIX 4C NET PRESENT VALUE ESTIMATES
APPENDIX 4D BIOGAS UPGRADING SYSTEM TECHNOLOGY REVIEW

Tables

Table 4.1 Construction Cost Allowances, Contingencies, and Assumptions 4-6
Table 4.2 Unit Cost Assumptions 4-7
Table 4.3 Decision-Making Criteria 4-8
Table 4.4 Null Pathway Net Present Value 4-10
Table 4.5 Reciprocating Engine Biogas Quality Requirements 4-13
Table 4.6 Microturbine Biogas Quality Requirements 4-15
Table 4.7 Pathway 1 (Cogen) Design Criteria 4-22
Table 4.8 Design Alternatives Emissions and Energy Use Comparison Table for Pathway 1 (Cogen) 4-28
Table 4.9 Pathway 1 (Cogen) GHG Emissions and Offsets 4-29
Table 4.10 Pathway 1 (Cogen) Estimated Project Cost 4-30
Table 4.11 Pathway 1 (Cogen) Net Present Value 4-31
Table 4.12 MG&E Renewable Natural Gas Draft Quality Requirements 4-35
Table 4.13 Pathway 2 (RNG) Design Criteria 4-39
Table 4.14 Design Alternatives Emissions and Energy Use Comparison Table for Pathway 2 (RNG) 4-45
Table 4.15 Pathway 2 (RNG) GHG Emissions and Offsets 4-45
Table 4.16 Pathway 2 (RNG) Estimated Project Cost 4-46
Table 4.17 Pathway 2 (RNG) Net Present Value 4-48
Table 4.18 Estimated Project Cost Comparison 4-50
Table 4.19 Estimated Net Present Value Comparison 4-50
Table 4.20 Review of Pathways 1 and 2 Based on Decision Criteria 4-55
Table 4.21 Quantitative Scoring of Decision Criteria 4-56

Figures

Figure 4.1 Null Pathway Process Flow Diagram 4-9
Figure 4.2 Pathway 1 (Cogen) Process Flow Diagram 4-12
Figure 4.3 INNIO Jenbacher Series 420 Engine Generator 4-13
Figure 4.4 Microturbine Cutaway, via Capstone Microturbines 4-14
Figure 4.5 Capstone 1 Megawatt Microturbine Package 4-15
Figure 4.6 Gas Turbine at Metro Water Recovery, Colorado 4-16
Figure 4.7 Biogas Projections Versus Engine Fuel Consumption at Maximum Output - Two 1,503 Kilowatt 2G Energy Engines 4-20
Figure 4.8 Biogas Projections Versus Engine Fuel Consumption at Maximum Output - Two 1,840 Kilowatt Engines 4-21
Figure 4.9 Pathway 1 (Cogen) Proposed Site Layout 4-24
Figure 4.10 Preliminary One-Line Diagram Using Existing U1 Feeders 4-26
Figure 4.11 Preliminary One-Line Diagram Using Dedicated Feeders From S1 4-27
Figure 4.12 Pathway 1 (Cogen) Sensitivity Analysis 4-33
Figure 4.13 Pathway 2 (RNG) Process Flow Diagram 4-34
Figure 4.14 Membrane Biogas Upgrading 4-37
Figure 4.15 Multi-Stage Membrane Treatment 4-38

Figure 4.16	Pathway 2 (RNG) Proposed Site Layout	4-41
Figure 4.17	Renewable Natural Gas Piping to Injection Point	4-42
Figure 4.18	Pathway 2 (RNG) Preliminary One-Line Diagram	4-44
Figure 4.19	Sensitivity Analysis for Pathway 2 (RNG)	4-49
Figure 4.20	Comparison of Net Present Values	4-54

Abbreviations

ºC	degrees Celsius
ºF	degrees Fahrenheit
$	dollars
%	percent
AACE International	Association for the Advancement of Cost Engineering International
ANR	ANR Pipeline Company
Btu	British thermal unit
Carollo	Carollo Engineers
cfd	cubic feet per day
CH_4	methane
CHP	combined heat and power
CNG	compressed natural gas
CO	carbon monoxide
CO_2	carbon dioxide
CO_2e	carbon dioxide equivalents
D3	cellulosic biofuel
D5	advanced biofuel
Dth	dekatherm
EPA	United States Environmental Protection Agency
eRIN	electric renewable identification number
FOG	Fats, Oils, and Grease
GAC	granular activated carbon
GHG	greenhouse gas
H_2S	hydrogen sulfide
hp	horsepower
hr	hour(s)
HVAC	heating, ventilation, and air conditioning
I&C	instrumentation and controls
IRA	Inflation Reduction Act
ISCC	International Sustainability and Carbon Certification
ITC	investment tax credit
kVA	kilovolt-ampere
kWh	kilowatt-hour
kW	kilowatt
lb/MMscf	pounds per million standard cubic feet
LCFS	low carbon fuel standard
MAOP	maximum allowable operating pressure

MG	million gallons
MG&E	Madison Gas and Electric
mgd	million gallons per day
MMBtu	million British thermal units
MMBH	million British thermal units per hour
MMSD	Madison Metropolitan Sewerage District
MT	metric ton(s)
MW	megawatt
MWh	megawatt-hour
NO_X	nitrous oxide
NPV	net present value
NSWTP	Nine Springs Wastewater Treatment Plant
O&M	operations and maintenance
ppbv	parts per billion by volume
ppm	parts per million
ppmv	parts per million by volume
psi	pounds per square inch
psig	pounds per square inch gauge
PTC	production tax credit
REC	renewable energy certificate
RFS	renewable fuel standard
RIN	renewable identification number
RNG	renewable natural gas
RPS	renewable portfolio standard
scf	standard cubic foot
scfd	standard cubic feet per day
scfm	standard cubic feet per minute
SO_2	sulfur dioxide
SO_3	sulfite
SO_4	sulfate
TM	technical memorandum
U.S.	United States
Unison	Unison Solutions, Inc.
VFD	variable frequency drive
VOC	volatile organic compound
WDNR	Wisconsin Department of Natural Resources
WRRF	water resource recovery facility
yr	year(s)

TM 4 BIOGAS EVALUATION

4.1 Purpose and Scope

The purpose of this technical memorandum (TM) is to document findings from the evaluation of the following pathways to beneficially use biogas at the Nine Springs Wastewater Treatment Plant (NSWTP):

- **Null Pathway.** Existing operation with no major changes. Existing cogeneration engines, engine blower, and hot water infrastructure remain in use with regular maintenance and are rebuilt as needed. The existing chiller and booster blower in the digester gas conditioning system will be replaced with new equipment. The remaining gas conditioning system will remain as-is (tanks, heat exchangers, piping, etc.).
- **Pathway 1 - Cogeneration.** Replacement of existing cogeneration engines with new upsized, higher-efficiency cogeneration engines in a new cogeneration building, replacement of gas conditioning system, and decommissioning of engine blower. The intent is for all biogas to be utilized in the new engines for heat and power production.
- **Pathway 2 – Renewable Natural Gas.** Replacement of existing cogeneration engines with a biogas upgrading system for pipeline injection of renewable natural gas (RNG) and decommissioning of engine blower. The intent is for all biogas to be utilized in the new biogas upgrading system for RNG production.

For each pathway, a base case technology was selected based on biogas projections at the NSWTP through 2050 (as developed in TM 2). Capital and life cycle costs were developed for Pathway 1 and 2 as well as for the null pathway for comparison purposes. Each alternative was also evaluated against the decision criteria documented in TM 1.

This TM builds on the work included in the following TMs that have been prepared as part of this Heat and Power Improvements Project:

1. TM 1 - Decision-Making Criteria, Envision™ Roadmap, Greenhouse Gas and Energy Baseline.
2. TM 2 - Biogas Production and Thermal Demand Projections.
3. TM 3 - Existing Infrastructure Evaluation.

4.2 Financial Market Considerations

To determine the best use of Madison Metropolitan Sewerage District's (MMSD) biogas resources, the long-term viability of financial incentive markets as well as the potential impact from current and future policies must be considered. This section identifies the revenue markets for cogeneration and RNG.

The main value of renewable electricity from cogeneration has typically come from the ability to use the produced electricity onsite and therefore reduce the amount of electricity needed to be purchased externally. Other opportunities to monetize this resource include the following:

- **Renewable Energy Certificates (RECs):** RECs are a market-based instrument used to substantiate renewable electricity use claims. Revenues are generated through the sale of RECs which each

represent 1 megawatt-hour (MWh) of electricity generated and delivered to the electricity grid from a renewable source.

- **Renewable Fuel Standard (RFS) Program:** The RFS program is managed by the United States Environmental Protection Agency (EPA) and is used to offset carbon emissions in the transportation sector. The program obligates fossil fuel refiners and importers to purchase a certain amount of renewable attributes. Producers of renewable fuels, including RNG, produce these attributes, called Renewable Identification Numbers (RINs). The RFS program recently defined a pathway to generate electric renewable identification numbers (eRINs) from electricity produced from qualifying renewable biomass and used to charge vehicles and offset fossil-based transportation fuel. Revenues are generated through the sale of the eRINs.
- **International Sustainability and Carbon Certification (ISCC).** ISCC is a globally recognized system designed to promote sustainable supply chains. It provides monetary incentives for the use of certified feedstocks that contribute to a circular economy.
- **Inflation Reduction Act (IRA) Production Tax Credit (PTC).** The IRA included incentives for biogas projects in two ways. First, projects under construction by the end of 2024 were eligible for the Investment Tax Credit, which is structured as a direct payment of a percentage of the project cost. Projects under construction in 2025 and beyond are eligible for the PTC, which provides tax credits based on the amount of energy produced.

The value of RNG can be broken into the value of the physical natural gas molecules and the value of its environmental attribute. The value of a physical natural gas molecule is typically tied to a regional gas index.

Most of the value of RNG is from its environmental attribute. Opportunities to monetize this resource include the following:

- **RFS Program:** Revenues are generated through the sale of RINs, credits which each represent 77,000 British thermal units (Btu) of biogas.
- **Low Carbon Fuel Standard (LCFS) Programs:** LCFS programs are managed at either the state or regional level and establish compliance goals to reduce carbon emissions. It is difficult for wastewater treatment facilities to compete with dairy RNG projects for LCFS credits. Carollo Engineers (Carollo) does not recommend including LCFS credit in revenue projections.
- **Voluntary Markets:** These local, national, and international markets are implemented by either corporations or natural gas utilities focused on sustainability. In some cases, the corporations/utilities have compliance requirements to achieve long-term sustainability goals. Revenues are generated through the sale of RNG to these corporations/utilities.
- **IRA PTC:** As noted above, both cogeneration and RNG projects can be eligible for tax credits for projects constructed in 2025 and beyond.

4.2.1 Renewable Energy Certificates

To comply with renewable mandates, electric utilities can purchase RECs, a market-based instrument issued when 1 MWh of electricity is generated and delivered to the electricity grid from a renewable source. Utilities may also generate their own RECs by generating and delivering renewable electricity. RECs are also available in voluntary markets as utilities want to publicly disclose their production of renewables;

however, the voluntary market is separate from, and incremental to, the mandatory market to avoid double claims on the same megawatt-hour. RECs are the accepted legal instrument through which renewable energy generation and usage claims are substantiated in United States (U.S.) markets, and are supported by various state governments, utility commissions, trade organizations, and U.S. case law. It should be noted that the Renewable Portfolio Standards (RPS) programs and prices vary from state to state; however, in general, RECs that supply mandatory markets tend to hover just below the cost of non-compliance with a given RPS state program. For the purposes of this evaluation, RECs are assumed to be in the range of $2 to $3 per MWh, which results in a marginal increase in the overall anticipated revenue stream (as compared to the savings from offsetting electricity purchase alone).

4.2.2 Renewable Fuel Standard Program

The EPA's RFS Program creates MMSD's largest opportunities for financial gain via biogas utilization. It was created under the Energy Policy Act of 2005 (https://www.epa.gov/renewable-fuel-standard-program) and established the first renewable fuel volume mandate in the United States. The program requires oil and gas producers to purchase specified amounts of fuel credits each year to increase renewable fuel use in the transportation sector. Each 77,000 Btu of biogas (based on the lower heating value) used for vehicle fuel represents one RIN.

To become a RIN producer through the RFS program, MMSD would need to become certified with the EPA. This certification is typically managed by a third-party environmental attribute developer (i.e., RIN broker). RIN brokers can also manage ongoing reporting and management duties and handle the sale of RINs to obligated parties. In exchange, they receive a management fee based on an agreed upon percentage of the RIN value. This analysis assumes the employment of a RIN broker, a $150,000 one-time certification and reporting charge for EPA registration, and a 15 percent reduction in RIN revenue for management fees.

The RFS program defines the following four types of renewable fuel: cellulosic biofuel, biomass-based diesel, advanced biofuel, and renewable fuel. The biogas produced by municipal digesters can either be designated as cellulosic biofuel (D3) or advanced biofuel (D5).

The delineation between D3 and D5 biogas has a large impact on the economic potential of utilized biogas. Although the RNG and renewable electricity produced from D3 and D5 biogas are identical, the digester feedstock differs. The EPA has defined municipal wastewater as a D3 RIN, whereas D5 RINs are issued for biogas produced from co-digestion of external food wastes and fats, oils, and grease. For this evaluation, it was assumed that all of MMSD's digester gas qualifies as a D3 RIN. Gas produced from external high strength wastes (if considered) would be classified as a D5 RIN.

RINs are traded on an open market, meaning sales and RIN prices are publicized. RIN value is dependent upon supply and demand, which is greatly influenced by the price of oil and renewable volume obligations (i.e., the number of RINs obligated parties must purchase). When D3 RINs were first introduced to the market, they had a value of approximately $1.00/RIN. In 2022, D3 RIN values peaked around $3.50/RIN. D5 RINs were also introduced at approximately $1.00/RIN, and their value remained stable for several years before dropping to a low of $0.10/RIN in early 2019. The average D3 RIN value from 2015 through January 2025 was $2.20/RIN ($25.74/million British thermal units [MMBtu]). The average D5 RIN value from 2015 through January 2025 was $0.96/RIN ($11.23/MMBtu).

The RFS program is generally supported across the political spectrum, as it also incentivizes ethanol production. As the program was created via Congressional legislation, it is believed to be viable into the future. While the possibility exists that it is eliminated via legislation or modified by executive action, there is no serious discussion about elimination of the RFS program by the current administration.

4.2.2.1 Renewable Fuel Standard Program - Electric Renewable Identification Numbers

The RFS regulations include a pathway for electricity produced from biogas to generate eRINs, which could significantly impact the financial payback potential of Pathway 1. While the EPA has not yet approved any such project, in draft rulemaking from December 2022, they proposed regulatory changes to prescribe how RINs from renewable electricity (eRINs) would be implemented and managed under the RFS program with the goal to address many of the outstanding issues which to date have prevented EPA from registering parties to allow them to generate eRINs produced from qualifying renewable biomass and used as transportation fuel. The draft rulemaking proposed an eRIN equivalence value of 6.5 kilowatt-hour (kWh) per RIN, which translates to eRIN prices of $0.34/kWh and $0.15/kWh for D3 and D5, respectively, based on average RIN prices presented above. Original equipment manufacturers (i.e., electrical vehicle manufacturers like Tesla, Ford, etc.) would manage the eRIN process and be entitled to 50 percent of the eRIN value, meaning MMSD would only receive 50 percent of generated eRIN revenue. Importantly, however, if the cogeneration system includes a connection to the grid (whether utilized or not), current understanding indicates MMSD would be able to both use generated electricity onsite (offsetting electricity costs) and earn eRIN revenue. While the EPA originally intended to finalize the eRIN program in 2023, in the Final RFS Rule for 2023, 2024, and 2025, the EPA delayed finalization due to the volume and complexity of stakeholder comments received in response to the December 2022 draft. Sensitivity analyses herein include revenue from eRINs for comparison purposes, however there is a strong potential that this pathway (and associated revenue) will never be realized.

4.2.3 International Sustainability and Carbon Certification

To qualify for ISCC, a utility needs to show a physical connection between their biogas system and the natural gas grid. MMSD has this connection in your NSWTP system, and this could be included in a new cogeneration system design. This revenue stream would translate to approximately $900,000 per year based on your current biogas production. This revenue cannot be combined with RECs and eRINs as credit for the environmental attribute can only be taken once.

Metro Water Recovery in Colorado previously qualified for ISCC, which allowed them to receive $300,000 per month for the environmental attributes associated with their cogeneration system. However, Metro recently learned that their certification will not be renewed. The latest guidance from the ISCC system calls into question the interconnectedness (or lack thereof) of the natural gas grid in the United States. This raised concerns around the traceability of biomethane across multiple private grid operators. In contrast, the European natural gas grid has very few operators, many of which are state-owned, and all conform to European Union monitoring and reporting standards. Out of an abundance of caution, Metro's certifying body has determined that US-based biomethane production sites are too risky to continue certifying because the chain of custody will no longer comply with ISCC requirements. ISCC credits are shown in the life cycle cost evaluation herein, but should not be assumed to be viable at this time.

4.2.4 Voluntary Markets

Similar to the vehicle fuel markets, voluntary purchasers are utilizing RNG as a part of their companies' solutions to meet environmental, social, and governance goals. Potential voluntary purchasers include the following (BlueSource, 2021).

Voluntary purchasers also include natural gas utilities starting to diversify their sustainability portfolios into the RNG markets. Voluntary market pricing typically ranges from $10 to $20 per MMBtu, with the added benefit of establishing longer term contracts with a fixed price. Voluntary markets are considered to be less sensitive to pricing volatility as compared to the RFS program.

It is reasonable to assume 100 percent of MMSD's RNG could be purchased by a single voluntary buyer. Similar to the RFS program, a third-party carbon broker typically manages the sale of RNG onto the voluntary market. The assumed voluntary market prices are not competitive with RFS Program RIN prices, however, the voluntary market is considered as part of sensitivity evaluations in the event that MMSD prefers a more stable long-term revenue stream.

4.2.5 Inflation Reduction Act Production Tax Credit

The IRA of 2022 modified existing tax code to allow biogas utilization projects to qualify for an investment tax credit (ITC) as a direct tax reimbursement based on the project's capital expense. Previously, the tax code was applicable to wind energy, but the IRA expanded the allowable energy sources to include biogas from wastewater. The base tax credit is six percent of the project's qualifying capital expense, and adhering to specific requirements can increase the credit to 40 percent of the project cost. Commencement of project construction is required by the end of 2024, making the ITC no longer applicable for the District.

However, biogas projects under construction after the beginning of 2025 may be eligible for a PTC, which provides tax credits based on the amount of energy produced. The value of the PTC will follow a similar scale to the ITC, with a base credit and incentives that increase the value. Although it is unclear, it is possible that PTCs could be applicable to either a cogeneration or biogas upgrading project. At this time, there is very little information available on the value of PTC derived from biogas, as efforts on the part of utilities, the federal government, and tax firms have been dedicated to the ITC. PTC revenues were not considered in the life cycle analysis but should be revisited in the future.

Discussions are recommended with a tax professional to determine eligibility, requirements, and revenues for PTCs during preliminary design.

4.3 Planning Criteria

4.3.1 Capital and Life Cycle Cost Assumptions

The economic analyses for the two biogas use alternatives include the following elements:

- Capital costs.
- Operation and maintenance (O&M) costs.
- Revenue generated or costs offset.
- Payback period:
  - The estimated time required to recover the initial capital investment through the project's annual revenue or generated cash flow.

Cost estimates were prepared using pricing from similar projects, vendor quotes, and conceptual unit costs. A net present value (NPV) was developed for each alternative to enable a comprehensive total life cycle analysis comparison.

4.3.1.1 Capital Cost Estimating Assumptions

Cost estimating was conducted by identifying equipment and construction costs in 2025 dollars and cost estimating assumptions are summarized in Table 4.1. The total project cost estimates include direct and indirect construction costs as well as engineering, administrative, and legal services costs. Direct costs are provided for major project components and are based on equipment quotes or unit costs. Equipment quotes were solicited for the major pieces of equipment associated with each pathway. Allowances for structural, architectural, electrical, or instrumentation work are based on the total of the direct costs. An estimating contingency is added to the Association for the Advancement of Cost Engineering (AACE) International Class 4 level estimate to produce the total direct costs.

Table 4.1 Construction Cost Allowances, Contingencies, and Assumptions

Criteria	Assumption Used
Construction Allowances	
Equipment Installation	20% of equipment costs
Structural/Architectural Allowance	3% of direct costs
Mechanical System Allowance (HVAC, plumbing, etc.)	3 - 7.5% of direct costs
Electrical, I&C, Programming Allowance	25% of direct costs
Piping/Valve Allowance	30% of direct costs
Construction Contingency	30% of direct costs
General Conditions, Contractor Mark-Ups, Escalation	
General Conditions Allowance	15% of direct costs, including allowances
Contractor Overhead and Profit	20% of direct costs, including allowances
Bonds and Insurance	3% of direct costs, including allowances
Engineering and Administrative Costs	
Engineering, Legal, and Administrative Fees	15% of construction costs(1)
Construction Management	10% construction costs

Notes:
% - percent; HVAC - heating, ventilation, and air conditioning; I&C - instrumentation and controls.
(1) The value of 15-percent was confirmed by staff based on historical MMSD projects.

4.3.1.2 Life Cycle Costs

Twenty-year life cycle costs were calculated to determine the projected payback period each pathway (Table 4.2). Life cycle costs include O&M costs, operating cost savings, and revenue projections. Life cycle cost development assumed linear increases in the cost of energy, labor, and materials throughout the planning period.

All future costs were adjusted for inflation by applying an assumed annual escalation rate of 3.5 percent to the current costs for each year of the planning period. For comparison, all costs were calculated in terms of NPV for a planning analysis starting with construction in 2028 and operation in 2029 through 2048 (for a total operation of 20 years). A 2.5 percent discount rate was used based on the Wisconsin Department of Natural Resources' (WDNR) Municipal Wastewater Facility Planning website.

Table 4.2 Unit Cost Assumptions

Parameter	Value	Unit
Escalation		
Escalation Rate	3.5	%
Discount Rate	2.5	%
Utility Cost Assumptions		
Electricity (MG&E) Rate(1)	$0.111	$/kWh
Natural Gas Rate(2)	$5.461	$/MMBtu, $/Dth
Cost/Revenue Assumptions		
RFS Program Certification One-Time Cost in 2028	$150,000	$
RFS Program Annual Reporting Fees	$100,000	$
RIN Brokerage Costs	15%	Percentage of RIN Revenue
D3 RIN Value(3)	$2.20	$/RIN
eRIN Value(4)	$0.34	$/kWh
Brown Gas Value(5)	$1.00	$/MMBtu
Annual Maintenance Cost	2-4%	of equipment costs

Notes:
$ - dollars; Dth - dekatherm; MG&E - Madison Gas and Electric.
(1) Electricity rate calculated from the MMSD's 2024 MG&E electricity bills (including demand charges) divided by MMSD's electricity usage in kWh.
(2) Natural gas rate calculated from the MMSD's 2024 natural gas cost divided by the 2024 natural gas usage.
(3) Average D3 RIN value from 2015 through 2024. A value of $2.20/RIN equates to $28.60/MMBtu.
(4) eRIN value calculated from the average D3 RIN value and the eRIN equivalence value of 6.5 kWh/RIN proposed by EPA draft rulemaking published in December 2022 with a target effective date of January 1, 2024.
(5) Brown gas is the physical component of renewable natural gas (separated from the renewable attribute). Brown gas value takes into consideration the RNG sale price as well as transport fees and is based on data from operating installations.

4.3.2 Decision Making Criteria

The decision-making criteria for the project were established in the Kickoff and Visioning Workshop 0/1 and documented in TM 1 - Decision-Making Criteria, Envision™ Roadmap, Greenhouse Gas and Energy Baseline. A summary of the final categories is shown in Table 4.3. Weighting of each criterion is based on the scoring exercise that was performed during Workshop 0/1. The percent weighting of each criteria is based on the number of votes it received from MMSD staff in Workshop 0/1.

Table 4.3 Decision-Making Criteria

Category	Criteria	Description/Evaluation Metric	Weight
Financial	Capital Costs	Capital Cost (2025 $).	14%
	Life Cycle Costs	Capital Cost + Lifetime O&M Costs - Lifetime Revenue (2025 $).	20%
O&M	Operational Complexity/Difficulty	Complexity of and operator familiarity with process and associated equipment (qualitative score).	14%
	Operational Response/Risk/Uptime	Technology reliability, resilience, and issue response time requirements (qualitative score).	9%
Implementation	Future Site Flexibility	Ability to fit on the existing site and integrate with existing infrastructure (qualitative score).	9%
Other	Market Risk	Risk related to potential volatility in credit markets for Pathways 1 and 2 (qualitative score).	12%
	Energy Recovery	Energy capture efficiency.	10%
	Outside Dependence	Ability to address potential issues internally and level of reliance on outside resources (qualitative score).	12%

Life cycle costs were the highest priority criteria by MMSD staff, followed by capital costs and operational complexity/difficulty, next is energy recovery, and finally market risk and outside dependence.

These categories will be used to evaluate the optimum biogas pathway for MMSD. The individual sections describe the considerations for Pathway.

4.4 Null Pathway

The null pathway assumes continuation of the existing operations with no major changes; the existing cogeneration engines, engine blowers, and hot water infrastructure would remain in use with regular maintenance and rebuilds throughout the planning period as needed. This pathway provides the baseline alternative to compare existing operations to Pathways 1 and 2; however, it is not an option recommended for MMSD to pursue due to the ongoing issues associated with continued operation of equipment at or near its service life. In conjunction, the current hot water infrastructure doesn't allow all heat produced by the engines to be distributed to the various heat demands throughout the plant. A process flow diagram of the existing system is provided in Figure 4.1.

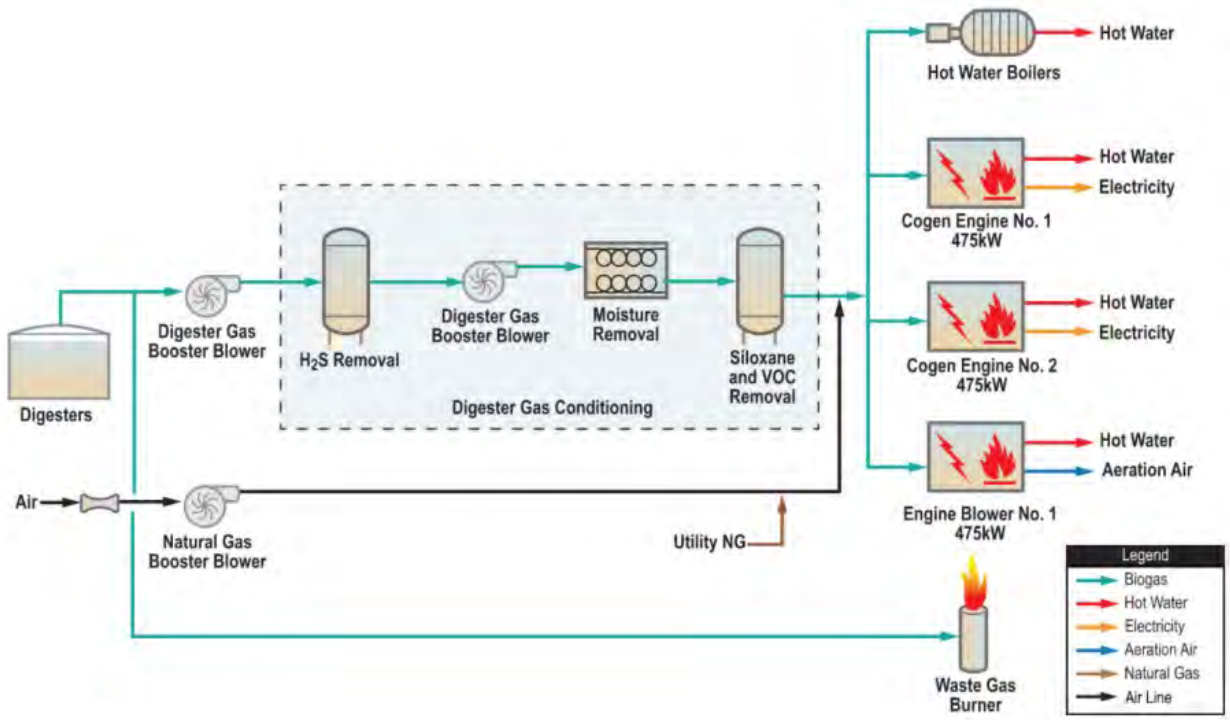

Figure 4.1 Null Pathway Process Flow Diagram

Carollo and Waukesha, the manufacturer of the current engine generators and blower, discussed the ability to rebuild the existing equipment into the future. Waukesha stated that they expect the engines to be able to be updated with new components as required, with full rebuilds performed as needed during the 20-year life cycle period analyzed. This includes major components such as the engine block, heads, pistons, rods, crankshaft, and other major mechanical components.

Waukesha expects that the controls and ignition systems would likely need to be updated with new systems to continue to operate over the same time span. Aftermarket controls and ignition systems could be retrofitted bring the engines up to date.

No major changes were assumed for the current cogeneration systems. Capital costs assumptions for the Null Pathway include the replacement of the existing digester gas booster blower and chiller with in-kind units since they are near the end of their useful life. The existing stainless-steel hydrogen sulfide (H_2S) and siloxane removal vessels and heat exchangers appear to be in adequate condition and are assumed to be operable throughout the period analyzed. Additionally, the engine generator controls have been upgraded, but not the engine blower controls. Based on conversations with plant staff, upgraded radiators would be recommended if MMSD were to pursue the Null Pathway, but were not included in capital costs.

NPVs were developed to compare the null pathway to Pathways 1 and 2, as shown in Table 4.4. For the NPV analysis, project cost was escalated to 2028 dollars at a 3.5 percent escalation rate to calculate the NPV of capital at the beginning of the 20-year cycle. Life cycle costs include periodic engine rebuilds (for the engine generators and the engine blower) and ongoing maintenance throughout the analyzed time period. Costs were based on data provided by MMSD and escalated as appropriate. It is assumed that the biogas distribution to end use equipment will remain consistent with historical gas utilization. According to daily process data from 2020 through 2024, the distribution of biogas flow is as follows: engine

generators (60 percent), engine blower (15 percent), hot water boilers (12 percent), steam boilers (7 percent), and flare (6 percent).

The capacity of the existing conditioning system has been estimated to be 630 standard cubic feet per minute (scfm). Therefore, the life cycle costs assume that any biogas flows above this value are not used beneficially and are sent directly to the waste gas flare.

Gas conditioning media replacement costs are based on budgetary proposals from Unison Solutions, Inc. (Unison). It should be noted that these costs are higher than what MMSD currently pays for their annual media replacement. Per MMSD staff, current media replacement costs are approximately $55,000 annually. A sensitivity analysis on media replacement costs is included in subsequent sections for Pathways 1 and 2.

Table 4.4 Null Pathway Net Present Value

	Costs/(Revenues)
Estimated Project Cost (2028 dollars)	$612,000
Annual Costs	
Natural Gas Cost for Process and Building Heat, $/year	$406,000
Cogeneration and Gas Conditioning System O&M, $/year	$136,000
Engine Generator Rebuilds (annualized), $/year	$75,000
Gas conditioning media replacement, $/year	$57,000
Annual Revenues	
Electricity, $/year(1)	($1,090,000)
Net Annual Costs/(Revenues), $/year	($416,000)
Net Present Value	($7,627,000)

Notes:
(1) Cogeneration revenue represented as electrical off-sets or saved electrical costs.

Based on the information presented in the table above, the annual costs associated with the null pathway are similar to the savings associated with electricity production. In addition, operability challenges regularly prevent the system from operating as intended and maximizing the theoretical energy recovery. Therefore, maintaining operation of the existing system is not recommended in the long-term.

4.4.1 Energy Impacts

Current and projected future impacts on energy mix, use, sources, and onsite production were evaluated for the Null Pathway using the biogas projections developed in TM 2. With the existing engine blower and engine generators remaining in service under the Null Pathway, it is assumed that the biogas system prioritization and distribution to end use equipment would be unchanged. As a result, impacts on the energy system are not expected under current conditions and biogas production. Future energy impacts would be restricted to the projected growth in biogas production and the corresponding increase in biogas delivered to end use equipment to the extent allowable. Throughput limitations cap the amount of conditioned gas available to send to end use equipment. As biogas production increases, the gap between raw biogas availability and conditioning capacity will widen, leading to increased flaring.

4.4.2 Waste Gas Burner Capacity

At MMSD's request, Carollo performed an analysis to determine if the existing waste gas burner and associated gas control equipment (e.g., 12-inch back pressure regulator valve and 10-inch flame trap assembly) have adequate capacity for the digester gas production summarized in TM 2. Carollo used the measured peak day gas production of 1.1 million standard cubic feet per day (scfd) from the data and added a 30-percent peaking factor to account for variance in gas production typical in digesters throughout a given day. Gas safety equipment such as waste gas burners should be sized for the facility's entire gas production capability, in the event gas use equipment or the gas conditioning system is offline and the gas burning equipment cannot consume digester gas on site. While this is a low frequency occurrence, it is industry standard to size the systems in this manner so all gas produced can be safely flared at any time.

Calculations showed excessive pressure drop through the existing back pressure regulator valve and flame trap assembly at peak conditions – well beyond what Carollo would design for if this was a new or replacement waste gas burner facility. Excessive pressure drop at these devices cause increased pressure upstream in the digesters and main digester gas header, potentially leading to digester gas relieving through the pressure relief valves on the digesters. Additionally, the calculated gas velocity through the waste gas burner itself is significantly higher than recommended. Carollo recommends these systems be analyzed and upgraded during a future design project to accommodate future digester gas production (including peaking factor).

4.5 Pathway 1 - Cogeneration Evaluation

Pathway 1 includes replacement of MMSD's two existing Waukesha 475-kilowatt (kW) engine generators and existing engine blower with a new cogeneration system that is sized to utilize all the biogas produced at the NSWTP under projected biogas flows. As part of a separate project, analysis of the plant blower capacity after removal of the engine blower would be required.

This pathway includes replacing the existing biogas conditioning system with a new, higher capacity system that removes H_2S, siloxanes, and moisture from the biogas, then pressurizes it for use in the engines and boilers. A process flow diagram of Pathway 1 is presented in Figure 4.2. The flow path is similar to the current operation where the engines are fed conditioned biogas. However, the first priority for biogas use will be the new cogeneration system, and the boilers would only receive biogas if biogas production exceeded the cogeneration system capacity. The existing biogas boosters upstream of the digester gas conditioning system are not necessary under Pathway 1 and will be removed to simplify the biogas infrastructure. The new boilers (described in TM 5) will be dual fuel boilers that allow for digester gas or natural gas, but not a blend (as currently operated). The new digester gas booster blower provided as part of the new gas conditioning system will provide adequate flow and pressure to the engines. Biogas will be collected from the digesters, sent through H_2S removal vessels and boosted to undergo moisture and siloxane removal prior to being fed into the cogeneration engines. In the event the engines are out of service for maintenance, conditioned biogas can be routed to the boilers and excess biogas will be sent to the existing flare.

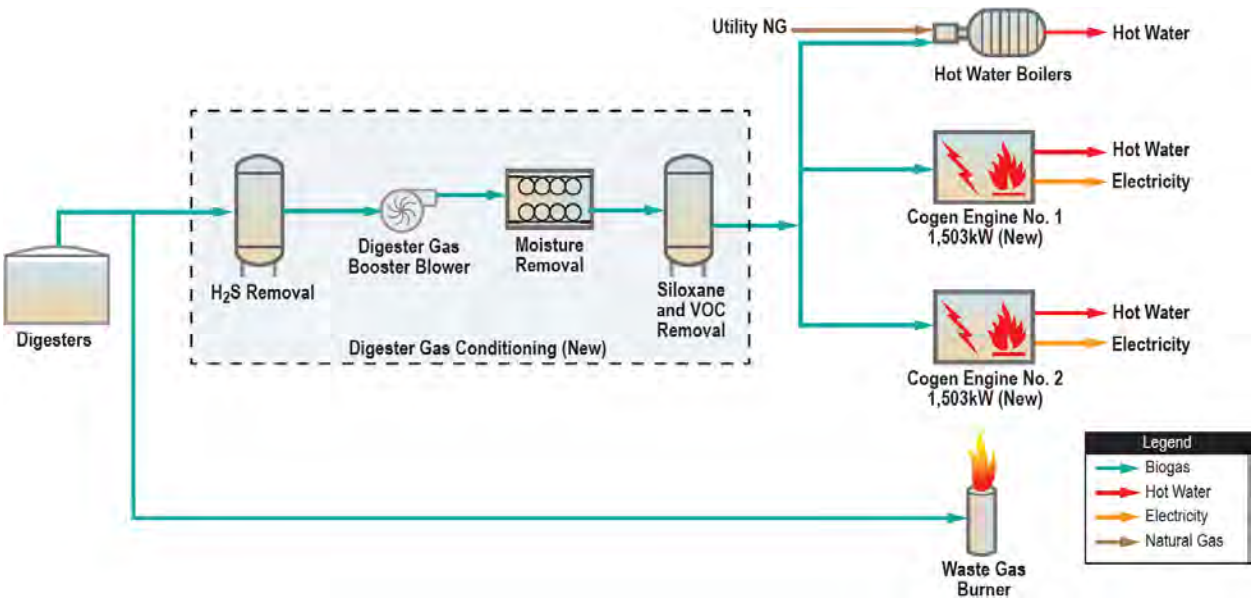

Figure 4.2 Pathway 1 (Cogen) Process Flow Diagram

The existing biogas system includes a natural gas mixing system that supplements digester gas use in the existing boilers and engines. Plant staff have indicated this system causes added complication. This system will be removed as part of Pathway 1 since it will not be required to operate the engines.

4.5.1 Basis of Design

4.5.1.1 Overview Description of Cogeneration Technologies

The three main cogeneration technologies commonly used in the U.S. at water resource recovery facilities (WRRFs) include conventional reciprocating engines, microturbines, and gas turbines. These were discussed in Workshop 4 with MMSD staff and are summarized below.

Reciprocating Engines

Reciprocating engines, commonly referred to as internal combustion engines, are the same type of engines that are currently at the NSWTP. Reciprocating engines are a common technology for beneficial biogas use at WRRFs and is a well-developed technology that has been used for decades. Reciprocating cogeneration engines use digester gas that is treated, compressed, and combusted within a combustion chamber. Pistons move up and down, spinning a crankshaft connected to an electric generator which produces electricity that can be used on site or delivered to the utility grid. Reciprocating engines that use new, modern lean burn technology are the most efficient cogeneration technology, capable of over 40 percent electrical and 40 percent thermal efficiencies at the size ranges required for MMSD's facility. For comparison, the existing rich-burn engines are below 30 percent (possibly as low as 26 percent) electrical efficiency.

Several lean-burn reciprocating engine suppliers have new generation, high efficiency, low emission units designed for use with biogas, including 2G Energy, Caterpillar (MWM), and INNIO Jenbacher in the size ranges for this application. These engines have overall efficiencies of approximately 85 percent, which

fluctuates slightly throughout the typical operating range of 50 to 100 percent output. Approximately 42 percent of the fuel input energy content is converted to electrical output and 40 to 45 percent to usable heat using heat exchangers that recover energy from the engine cooling water (jacket water) and exhaust and transfer it to the plant heat loop. New radiators will be required to waste unused heat from these higher efficiency engines, as MMSD's existing radiators are undersized. Figure 4.3 shows an image of an INNIO/Jenbacher engine generator similar in size to the cogeneration system proposed for this project. Note that this image only shows the engine-generator. The heat recovery equipment, silencers, and other ancillary equipment are not shown. These engines range in length from 20 to 25 feet and are about 7 feet wide.

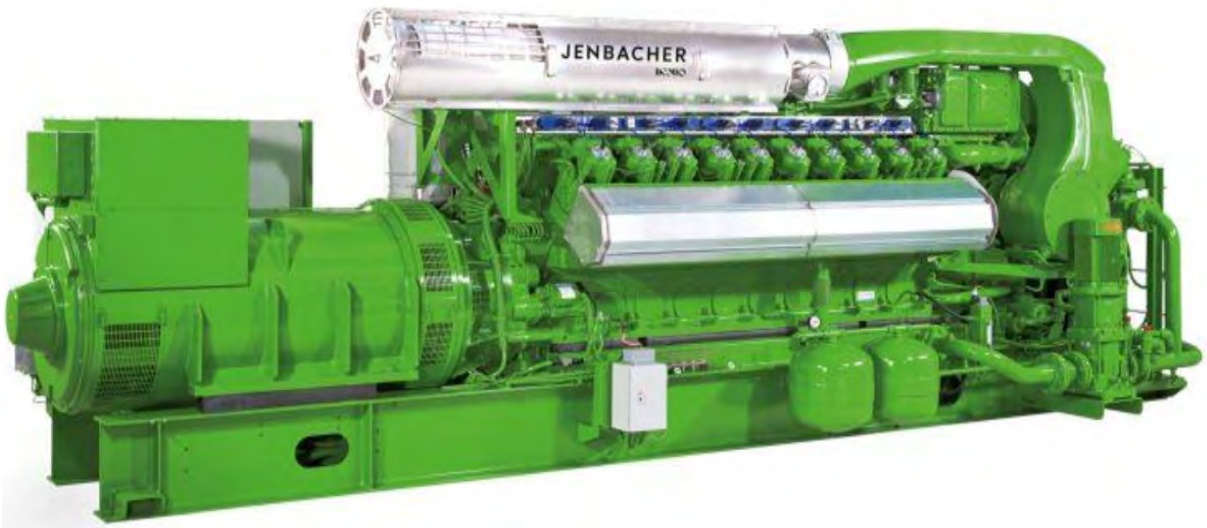

Figure 4.3 INNIO Jenbacher Series 420 Engine Generator

Engines require conditioned digester gas to properly operate and to reduce engine maintenance and downtime. Further details about gas conditioning can be found in Section 4.5.1.3. The gas must also be pressurized to approximately 5 pounds per square inch gauge (psig) for use within the engines. Typical biogas quality requirements for reciprocating engines are shown in Table 4.5.

Table 4.5 Reciprocating Engine Biogas Quality Requirements

Parameter	Value
Biogas pressure, psig	3-5
H_2S level, ppm	<50 ppm (1)
Siloxane level, ppbv	100
Relative humidity, %	50

Notes:
ppbv – parts per billion by volume; ppm – parts per million.
(1) <10 ppm H_2S levels required to extend siloxane media life.

For this application, Carollo recommends two 1,503 kW or similar sized engines. Engine sizing based on digester gas production is discussed further below.

Microturbines

Microturbines are small gas turbines that spin at high speeds (up to 90,000 revolutions per minute) while consuming compressed and treated digester gas and air mixture within a combustion chamber. The hot exhaust gas is forced through a turbine that spins a shaft connected to an electric generator (Figure 4.4). Microturbines require highly treated pressurized digester gas (100 psig) and lower siloxane content than reciprocating engines. They are also less efficient than reciprocating engines, with an electrical efficiency of 33 percent and thermal efficiency of about 30 percent.

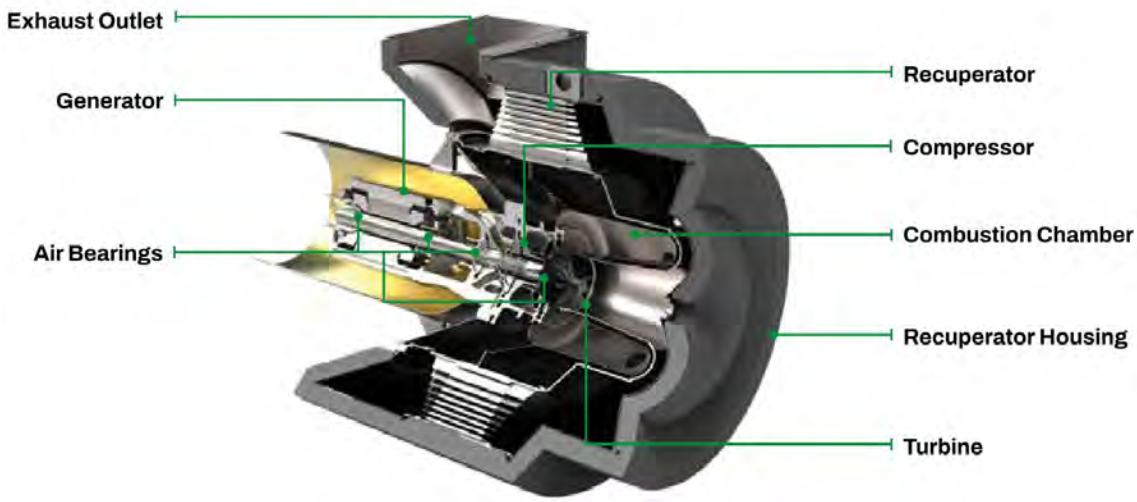

Figure 4.4 Microturbine Cutaway, via Capstone Microturbines

Microturbines have lower emissions capabilities than reciprocating engines. Additionally, microturbines only come in two sizes, 65 kW and 200 kW. Manufacturers can combine up to five 200 kW units into a single 1-megawatt (MW) module. To address increased future biogas production, additional modules of smaller capacity, i.e. a 600-kW module, can be added to increase overall system capacity. In this example, parts for all the microturbine modules are interchangeable.

For this application, MMSD produces adequate digester gas on average to operate approximately 2 MW worth of microturbines via two 1 MW modules. This is less output than reciprocating engines due to the lower electrical efficiency previously discussed. Figure 4.5 below shows a Capstone 1-MW microturbine module similar to what could be utilized for this project. Each module is approximately 30 feet long, 10 feet high, and 10 feet deep.

Figure 4.5 Capstone 1 Megawatt Microturbine Package

Carollo's experience is that microturbines have slightly higher capital and O&M costs than similar sized reciprocating engines and are not as reliable. Additionally, microturbines don't have the ability for partial load operation so they would need to be staged to use as much digester gas as is available. Because the individual microturbines cannot operate under partial load, turndown of a microturbine assembly is incremental based on the number of microturbine modules online. Extra digester gas could be sent to the boilers (if heat is required) or flared through the waste gas burner, potentially wasting more digester gas compared to conventional reciprocating engines.

Due to reliability issues, lack of successful long-term operational history at wastewater treatment plants, the potential to waste more digester gas, and higher capital and operating costs, microturbines are not recommended.

Gas quality requirements for microturbines are shown in Table 4.6.

Table 4.6 Microturbine Biogas Quality Requirements

Parameter	Value
Biogas pressure, psig	80-100
H_2S level, ppm	<5-10 ppm
Siloxane level, ppbv	<25
Relative humidity, %	25

Gas Turbines

Gas turbines operate with the same principle as described for microturbines but are a single turbine that is significantly larger in capacity. They have lower electrical efficiency (approximately 24 percent) than microturbines and similar thermal efficiency to reciprocating engines. They are also the most expensive at the size range desired for this application and are typically only competitive with engines at very large installations (e.g., greater than 5 MW). Gas turbines are typically installed where biogas production exceeds well over 1,000 scfm to be economical and are a less common technology at WRRFs in the U.S.

Additionally, like microturbines, gas turbines require high quality digester gas, increasing O&M costs for the gas conditioning system due to more frequent media changes. Gas turbines also have the highest parasitic loads of the three main technologies due to the highest gas pressure requirement of 175 psig.

There are also fewer manufacturers compared to engines. Currently, the two smallest sizes for gas turbines are 1.2 MW and 3.5 MW. One 1.2 MW turbine is too small for this application, while two 1.2 MW turbines or one 3.5 MW is too large due to low electrical efficiency and would need to consume significantly more biogas than the WRRF produces. Therefore, gas turbines would not be feasible for this installation. A gas turbine at Metro Water Recovery in Denver, Colorado is shown in Figure 4.6 below.

Figure 4.6 Gas Turbine at Metro Water Recovery, Colorado

4.5.1.2 Cogeneration Technology Recommendation

As discussed in Workshop 4 and based on MMSD's projected biogas flows and operating experience, reciprocating engines are the most appropriate and cost-effective alternative for Pathway 1 due to the following reasons:

- Lowest capital cost and operating cost.
- Best fit equipment sizes available for range of biogas production expected.
- Operator familiarity.
- Multiple manufacturers available.
- Most common cogeneration technology at WRRFs in the U.S.
- Highest electrical efficiency.
- Lowest biogas pressure and quality requirements (reduces parasitic loads).

Based on this, reciprocating engines were assumed for the Pathway 1 evaluation.

4.5.1.3 Overview of Biogas Conditioning

Biogas conditioning refers to the processes used to remove impurities from the raw biogas stream to increase equipment life and decrease maintenance requirements for downstream infrastructure. For cogeneration engines, biogas conditioning typically consists of treatment to remove H_2S, siloxanes, and moisture.

Hydrogen Sulfide Treatment

H_2S is a highly reduced compound that readily binds with most metals and is abundant in wastewater biogas. During combustion, H_2S reacts with oxygen to create sulfur, sulfur dioxide (SO_2), sulfite (SO_3), and sulfate (SO_4). These compounds together are termed SO_x and are regulated air pollutants. Additionally, oxidized sulfur compounds will react with water to form sulfuric acid, which corrodes equipment, resulting in increased maintenance and reduced service life.

H_2S pretreatment is needed upstream of the engines to protect the equipment from undue corrosive wear and fouling. In addition, the siloxane removal media will preferentially absorb H_2S in lieu of siloxanes, therefore, very low H_2S levels are required at the inlet of the siloxane vessels to improve siloxane removal efficiency.

Several options for H_2S treatment are commercially available, including:

1. **Media-Based Treatment.** The oldest commercial process for removing H_2S from gas is a media-based system with an iron-based H_2S binding agent. As biogas flows through a vessel filled with media (iron hydroxide impregnated wood chips or other engineered media), the H_2S is adsorbed onto the media and is removed from the gas stream. Media is removed and replaced periodically as it is spent during treatment. Activated carbon media can be used for H_2S removal, though iron-based media is the industry standard due to its lower cost and similar treatment effectiveness.

   At the flows and H_2S concentrations seen at the NSWTP, two H_2S removal vessels would be installed in series in a lead/lag configuration. Each vessel would have a media life of approximately 150 days. The first vessel will remove the majority of H_2S, while the second acts as a polishing vessel. Once the media is spent, the first vessel can be taken offline for media replacement and then put back online as the lag vessel.

2. **Ferric Chloride Addition to Digesters.** MMSD currently adds ferric chloride to the anaerobic digesters to control H_2S concentrations in the raw biogas to approximately 400 ppm. This Facility Plan assumes that the ferric chloride addition will be maintained at its current level, though an analysis of ferric chloride versus media treatment can be conducted as part of a future design effort to balance the economic cost of each and labor required for media changeout.

3. **Caustic Scrubbers and Alkaline Water Treatment.** Caustic scrubbers and alkaline water treatment are generally installed at installations with a much larger H_2S loading. Both are wet scrubbing processes that use countercurrent, media-packed towers and a liquid that reacts with the H_2S, removing it from the biogas. The liquid is regenerated using air in a separate tank and recirculated, producing a sulfur slurry that requires a pressure filter to recover the liquid and produce a sulfur cake. Due to the complexity of these systems and relatively low H_2S load in the biogas, these are not recommended.

4. **Biological Treatment.** Biological treatment systems utilize sulfur reducing bacteria for the removal of sulfur compounds from biogas. Physically, these systems are nearly identical to water scrubbing systems with a large media-packed tower and countercurrent flow. These systems are designed to

encourage biological growth on the packing, which consumes the H_2S compounds in an identical manner to biological odor scrubbers.

Biological treatment systems have been used as H_2S pretreatment for cogeneration successfully, though some projects have had issues maintaining a healthy biology that consistently removes sulfur, especially in colder climates.

5. **Micro-aeration.** Micro-aeration is a relatively new in-situ H_2S treatment that involves the addition of relatively small quantities of air or oxygen to anaerobic digesters. Aerobic sulfide oxidizing bacteria consume the H_2S and can produce elemental sulfur or sulfuric acid, depending on the digester and headspace composition. As shown through full-scale testing by MMSD and others, the micro-aeration process can significantly reduce H_2S concentrations in the biogas at lower operational cost than many of the other treatment methods described above, though it would require a polishing step downstream.

   Based on MMSD's initial testing, possible concrete deterioration in the head space of the digesters is a significant concern. As such, micro-aeration may not be feasible in the long-term without a protective coating applied to the concrete.

   Due to the lack of understanding related to long-term impacts of micro-aeration, this study recommends designing H_2S treatment for the full H_2S load, assuming micro-aeration is not utilized. In addition, micro-aeration is not recommended for Pathway 2 as it would introduce oxygen into the biogas.

6. **Recommended Hydrogen Sulfide Treatment.** Based on the biogas flow and H_2S loading at the NSWTP, continued ferric chloride addition and media-based treatment are recommended for H_2S removal from the raw biogas.

Siloxane and Volatile Organic Compound Removal

Siloxanes must be removed as part of the biogas conditioning process upstream of the cogeneration engines because during combustion, they form silica deposits on the rotating and heat transfer surfaces within the combustion chamber. This can eventually damage the rotating equipment and slowly reduces the effective heat transfer to the hot water system. The most common method of treatment is vessels filled with granular activated carbon (GAC) to adsorb the compounds from the biogas. GAC also removes volatile organic compounds (VOCs) from the biogas, though this isn't strictly necessary for cogeneration, since the VOCs would be combusted in the engines.

Vessels designed for siloxane and VOC removal will be filled with granular activated carbon, which will also provide a backup/polishing step for H_2S removal. The installation will include 2 media vessels in series. Media life in the vessels will be approximately 360 days (combined) at the inlet siloxane and VOC design parameters, which is consistent with MMSD's current media changeout schedule.

Other technologies that were not considered for VOC and siloxane removal are refrigeration, advanced refrigeration, liquid absorption, and silica gel. Advanced refrigeration and use of silica gel are evolving technologies that are not well-proven and not currently recommended for siloxane and VOC removal. GAC media is the preferred method of siloxane and VOC removal at these concentrations and flow rates and is the standard treatment technology provided for these constituents.

Moisture Removal

Moisture removal is accomplished by chilling the biogas to condense the moisture into droplets, removing it in knockout vessels, and draining the liquid from the system. Equipment provided for this step includes a standalone chiller and a variety of heat exchangers and knockout vessels within the biogas treatment skid.

Compression

Biogas conditioning systems are provided with a blower to convey the biogas through the required moisture removal, media-filled vessels, and other equipment. Two blowers are recommended in a 1 + 1 standby configuration. At the NSWTP flow rate, the blower motors will be 30 horsepower (hp) and will be equipped with variable frequency drives (VFD) for biogas flow control. Other flow and quality controls are the recycle streams and valving, as well as temperature control of the gas.

4.5.1.4 Cogeneration Sizing Analysis

Cogeneration and associated biogas conditioning systems must be sized carefully based on biogas flowrates and projections. It is common to see oversized engines at WRRFs, leading to maintenance issues and added costs. Ideally, the engine sizes are selected with a balance between biogas production, power production, electrical efficiency, and costs (capital and O&M). The analysis considered biogas production projections as noted in TM 2. Gas conditioning equipment has been sized based on digester gas consumption required by the engines at full output.

Carollo analyzed the biogas production presented in TM 2 with varying engine fuel input requirements and electrical efficiencies for both one and two engines operating. This allows Carollo to analyze several scenarios, including the two engines' fuel input requirements relative to average biogas production, as well as approximately when the engines will run at full output under average biogas production conditions. After inputting various engines' technical data into the calculator and reviewing the operating scenarios, based on available engines and their respective efficiencies Carollo determined two 1.5 MW engines appear to best fit MMSD's application, which can consume up to approximately 700 scfm of biogas. The operating scenarios for two 1,503 kW 2G Energy engines at 43.4-percent electrical efficiency are shown in Figure 4.7 below. Note that the engines will run below full output under average conditions until approximately 2041, when there's enough biogas produced to run the engines at 100-percent output under average conditions. These engine sizes will allow the engines to consume more biogas than average conditions for approximately the first 13 years of the analysis (2028 through 2041) while also allowing them to turndown during periods of lower biogas production early in the period. To facilitate increased capacity in the future as biogas production increases beyond 2050 levels, this analysis included adequate space in the cogeneration facility to replace the two 1.5 MW engines with two larger engines in the future. While installation of three engines (rather than two) would provide greater turndown capability, this is not recommended because it would result in higher capital and O&M costs.

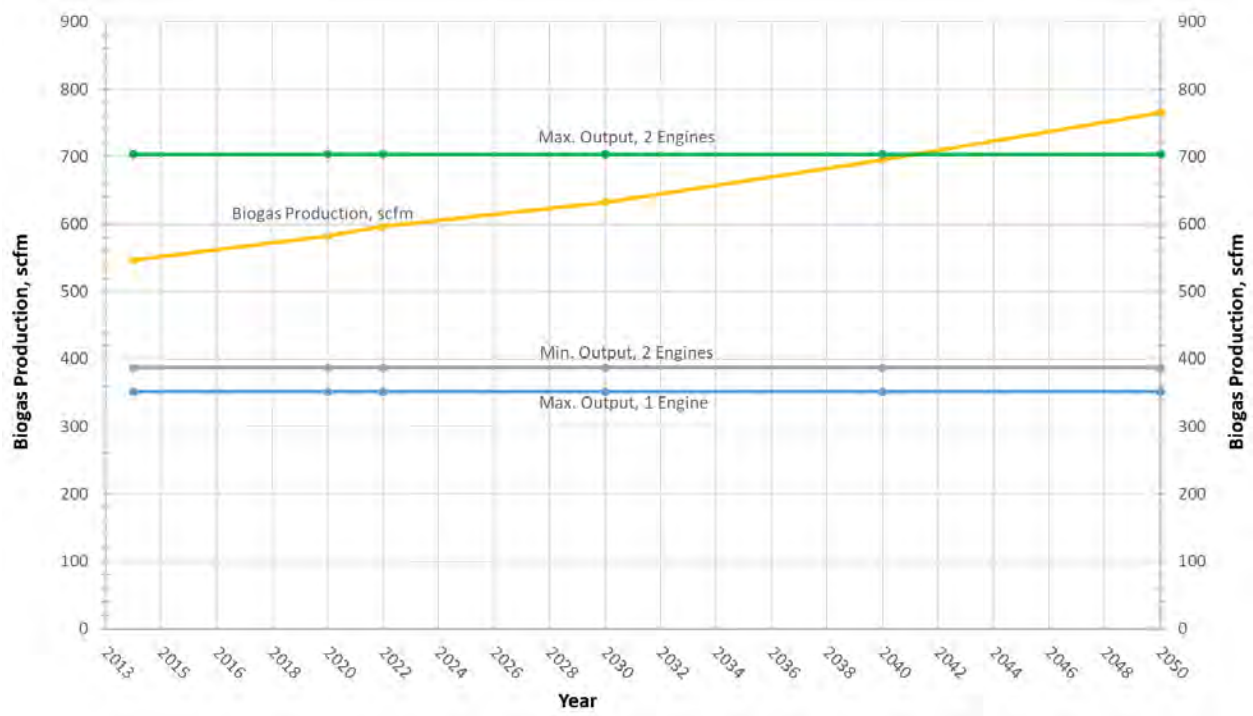

Figure 4.7 Biogas Projections Versus Engine Fuel Consumption at Maximum Output - Two 1,503 Kilowatt 2G Energy Engines

Note that each engine manufacturer has slightly different output ratings as well as electrical efficiencies for engines in the 1.5 MW size range. Therefore, Figure 4.7 will change depending on which exact engine is selected. Engines with lower efficiency will produce less power compared to higher efficiency engines, and the biogas production line will cross later in the analysis (e.g., in 2050). However, due to lower electrical efficiency, they will produce less power over the life of the engines, hurting payback and the NPV.

As previously mentioned, oversizing engines will increase accompanying capital costs in the short term and increase O&M costs in the long run. Even during periods of higher gas production, it is unlikely larger engines will run at their full output under average conditions until near the end of the analysis period, leading to increased O&M costs as well as reduced or no additional power production over the life of the engines. Oversizing engines results in engines running partly loaded for extended periods, reducing engine efficiency and potentially expected equipment life. For example, at lightly loaded conditions, turbochargers can foul, causing increased O&M. Additionally, engine O&M time is based on run-hours and not kW output, therefore, running a larger engine lightly loaded will result in higher O&M costs when compared to a smaller engine at higher output (even if the kW output is the same) due to the larger engine and equipment being inherently more expensive to maintain (higher consumable costs such as oil and spark plugs) and higher rebuild costs.

For comparison, two 1.84 MW engines with 41.7-percent electrical efficiency are shown in Figure 4.8. As can be observed in the graph, during the analysis period, there will never be enough average biogas production to run the engines at full capacity. In addition, the engines will only run approximately two-thirds loaded at the beginning of the analysis in 2028. Engines operate with reduced efficiencies at lower outputs, which will lead to reduced electrical production over time when compared to smaller, more efficient engines such as the 1.5 MW engines presented in Figure 4.7.

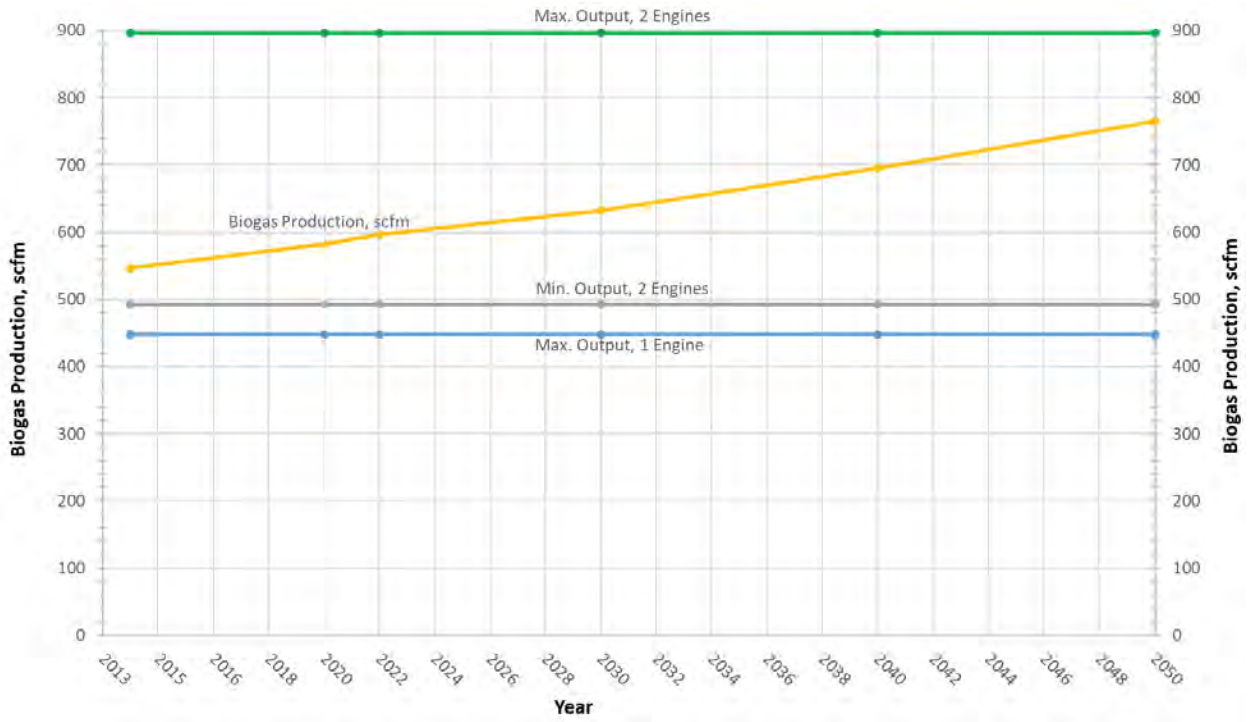

Figure 4.8 Biogas Projections Versus Engine Fuel Consumption at Maximum Output - Two 1,840 Kilowatt Engines

Conversely, under sizing an engine will cause more biogas to be flared, reducing the effectiveness of the engine to recover as much energy as possible from the biogas, leading to higher electricity costs and lower total electrical production over the lifetime of the engines.

When compared to the recommended engine sizes, larger engines would run too lightly loaded too far into the lifetime of the equipment (in some cases never running at full output at average conditions) causing increased O&M costs without an increase in power production (limited based on biogas production) for much of the engine life. Smaller engines would be at full output near the start of the analysis period leading to increased biogas flaring and reduced power production overall.

Note that other manufacturers produce engines with similar outputs, but they may not be exact matches. When selecting an engine size, there should be an allowance for a slight to moderate range either above or below these engines' combined output. If desired by MMSD, installation of two different engine sizes could be considered during design to better accommodate near-term turndown and future biogas production rates.

Table 4.7 shows the design criteria of the cogeneration engines and biogas upgrading equipment. If desired by MMSD, engines can be supplied that have the ability to run without an external power source (i.e. island mode) to increase MMSD's resilience to the electricity grid. Historical raw biogas quality is documented in TM 2.

Table 4.7 Pathway 1 (Cogen) Design Criteria

Cogeneration Design Parameters	Capacity
Engine electrical output, each, kW	1,503
Total combined output, kW	3,006
Biogas consumption at 100-output, scfm	703
Fuel input to each engine, MMBH	11.8
Total combined fuel input, MMBH	23.6
Thermal output, each, MMBH	5.5
Total thermal combined output, MMBH	11.0
Electrical efficiency at full output, percent	43.4
Thermal efficiency at full output, percent	46.7
Basis of design make and model	2G Energy - Avus 1200e
Gas Conditioning System Parameters	
Design flow rate	740 scfm
H_2S Treatment	
Technology	Engineered iron-hydroxide media
H_2S vessel quantity	2 (lead/lag)
H_2S outlet concentration, ppm	<10
Projected media life, days (per vessel)	150
Boosting	
Technology	Centrifugal
Quantity	1 + 1 standby
Motor size (hp)	30
Discharge pressure requirement, psi	5
Moisture Removal	
Technology	Chilling and knockout vessel
VOC/Siloxane Removal	
Technology	Activated carbon media
Vessel quantity	2 (series)
Siloxane outlet concentration, ppbv	<100
Projected media life, days (total)	365

Notes:
MMBH – million British thermal units per hour; psi – pounds per square inch.
(1) Discharge pressure requirement of 5 psi is based cogeneration engine manufacturer recommendation.

4.5.1.5 Cogeneration System Layout

Under Pathway 1, the engine blower will be decommissioned and the biogas use strategy will be simplified to send all biogas to the new cogeneration engines unless excess conditions occur.

Figure 4.9 presents the proposed site layout for Pathway 1. The two new engine generators will be housed in a new cogeneration building that is recommended to be located in the greenfield area to the east of the Struvite Harvesting Building. The proposed location is consistent with MMSD's Capital Project Infrastructure Placement Plan and the siting options for new heat and power infrastructure identified in that plan. The alternative siting option proposed was in the area to the south of the MG&E substation in the northwest part of the plant, but it was not pursued further given its remote location relative to the major solids processing infrastructure. In addition to the new cogeneration engines, the existing conditioning system will be replaced, and the new system is proposed to be co-located with the new cogeneration building to minimize the pipe run from the skid to the engines. The gas compression and moisture removal skid for the conditioning system are proposed to be located indoors (in a separate room from the cogeneration engines) to shield the equipment from the elements. The H_2S and siloxane/VOC removal vessels, along with the glycol chiller, and oil cooler will be located outside. The size of the new cogeneration building is proposed to be 110-feet by 60-feet for the new cogeneration engines, the gas compression and moisture removal skid for the conditioning system, as well as accommodate potential future larger cogeneration engines to keep pace with increasing biogas production beyond the analysis period. In addition, a concrete pad measuring 25-feet by 60-feet as an extension to the building is proposed for the removal vessels.

It is recommended to tie into the existing biogas distribution piping immediately downstream of the sludge storage tanks and Digesters 1 and 2. The new biogas piping, shown in orange, will convey raw biogas from the sludge storage tanks and digesters to the new gas conditioning skid which will feed the engines. Connecting into the main biogas header at this location minimizes the distance of the pipe connection to the new system. It is assumed that all existing biogas conditioning and cogeneration equipment will be demolished. All new digester gas piping will be sloped to new or existing condensate drains. The existing gas piping in the tunnel is 6-inch and 8-inch. Further evaluation is required to confirm that the existing gas piping is sized appropriately to convey the projected 2050 flows, depending on which digesters are assumed to be in service (as the existing piping conveys flows from two directions and thus does not convey the full flow). The new biogas piping routed to the cogeneration system is recommended to be minimum 12-inch diameter. Additional gas storage is not anticipated to be required, although this can be confirmed during final design. Based on initial calculations, there is 84 minutes of existing storage for projected biogas production in 2050.

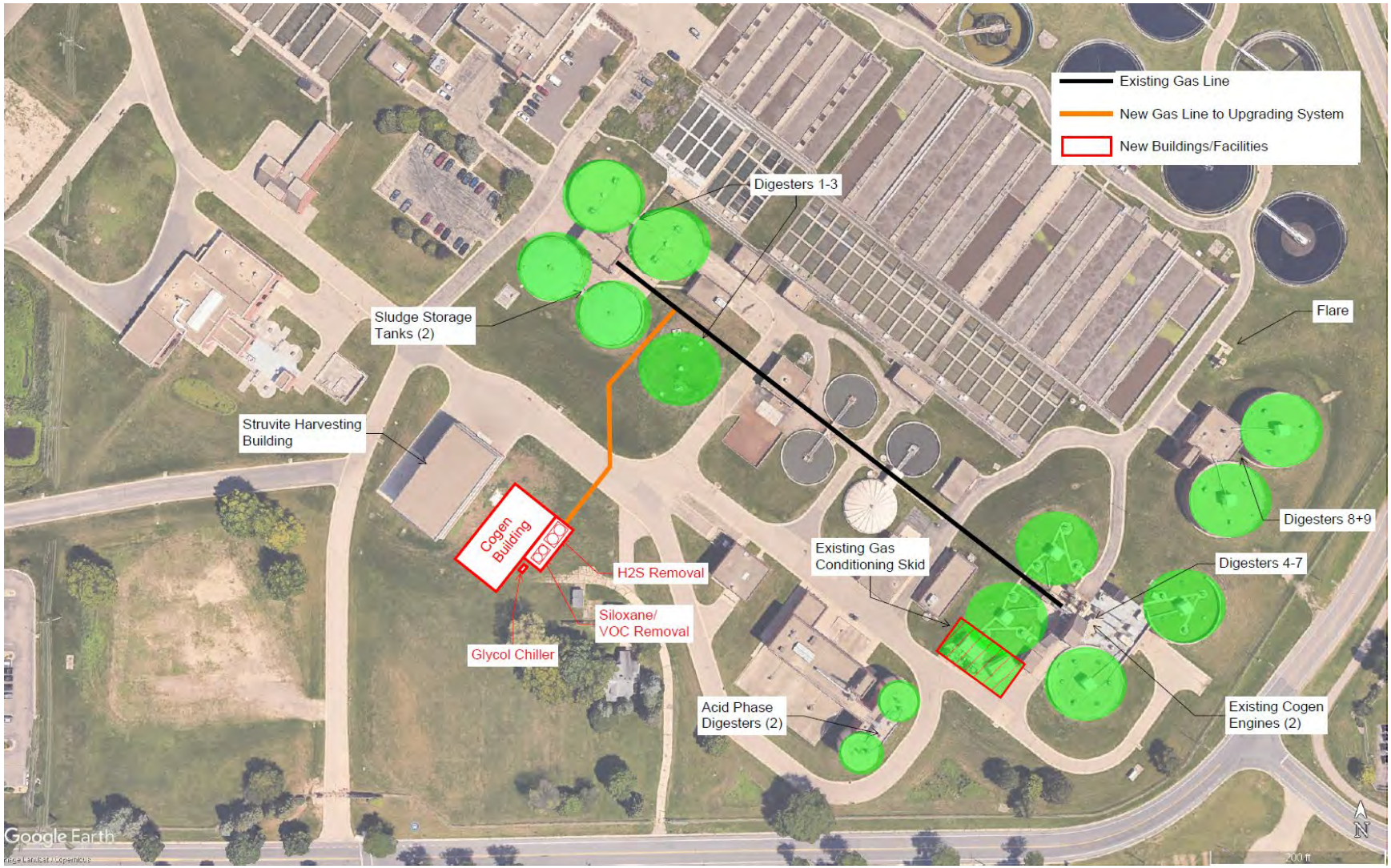

Figure 4.9 Pathway 1 (Cogen) Proposed Site Layout

4.5.1.6 Impact to Existing Thermal Energy Infrastructure

The new cogeneration system has the potential to recover more heat to be used in the plant heat loop compared to the existing cogeneration system, offsetting natural gas use in the boilers. However, given the engines are connected to the hot water system and not the steam system that heats the acid phase digesters, heat recovery from the engines will be limited during periods of warm weather. The hot water loop supplies heat to the buildings for building heat and the gas phase digesters, as well as struvite drying. While the gas phase digesters have a base heat demand throughout the year, the buildings don't require heat for approximately 44-percent of the time. Therefore, the heat recovery from the cogeneration system will be limited during that time to the gas phase digesters' and struvite drying process heat demand. All the cogeneration heat is expected to be recovered in the winter (approximately 56-percent of the time) for heating buildings and the gas phase digesters.

The acid phase digesters require significant heating year-round but are heated with the steam boilers (which are dual-fuel). Since the cogeneration system will produce hot water and not steam, they won't be able to offset the acid phase digesters' heat demand without significant process upgrades. Biogas could be routed to the steam boilers when cogeneration is out of service. For this evaluation, it was assumed that cogeneration is in service 95 percent of the year.

For this analysis it was assumed the recovered heat is only used in the hot water loop. If the steam boilers associated with the acid phase digesters were converted to hot water boilers, allowing full use of the produced heat from cogeneration, MMSD would see savings of approximately $5 to $7 million in natural gas purchase over a 20-year period.

The existing cogeneration engines provide up to approximately 5.6 MMBH to the existing plant heat loop. The new larger cogeneration engines are expected to provide approximately 11 MMBH of heat at their maximum output, but only 2.5 MMBH of heat during the summer. However, since the average digester gas production does not allow the engines to run at full output under average conditions at the beginning of the analysis and the buildings do not require heat 44-percent of the year, the engines are expected to initially produce an average of approximately 6.8 MMBH of heat, increasing to an average of 7.3 MMBH after a few years. Radiators would be installed to allow for the full heat production of the engines to be wasted if required during the summer months.

The new engines will be connected to the plant heat loop as described in TM 5.

Selection of Pathway 1 for biogas utilization may pair best with the centralized heating option, as discussed in TM 5, based on the significant quantity of heat produced within cogeneration. This additional heat will need to be distributed site-wide, which has infrastructure impacts on the hot water side of the system (i.e. larger piping and pumps).

4.5.1.7 Electrical Improvements

Relocating the cogeneration system east of the existing Struvite Harvesting building requires re-evaluation of both electrical power supply and connection back into the electrical system for the generated electricity. The proposed cogeneration engines have an electrical parasitic load of approximately 70 kW and an electricity generation capacity of 3,006 kW. The gas conditioning system will also add a parasitic electrical load of approximately 70 kW.

The existing 480-volt switchgear in each nearby unit substation (U1, U3, and U15) are not currently configured to connect the capacity of the proposed engines in a National Electric Code-approved manner; thus, 4,160-kilovolt medium-voltage engines are proposed. The plant's existing medium-voltage distribution system utilizes dedicated feeders from the main switchgear (S1) to medium-voltage switchgear and unit substations around the plant. Because there is no nearby medium-voltage equipment to which the new reciprocating engine feeders can connect, the following are potential options to connect the reciprocating engines:

- **Intercept the existing U1 feeders.** There are two existing feeders routed from S1 to U14, to U15, then to U1. Under this alternative, the existing feeders would be intercepted at the electrical manhole outside of U1 (EMH-17) and be re-routed to two new pad-mounted switches. The new pad-mounted switches would be located nearby and tied into the manhole with new duct bank. New medium-voltage cabling would be installed from the pad-mounted switches to U1 and to a new main-tie-main, medium-voltage cogeneration switchgear. In the event both engines are operating while connected to a single feeder, engine output limits may need to be included, depending on the available biogas production, due to ampacity limits of the medium-voltage cabling used throughout the plant. A preliminary one-line diagram showing this option is presented in Figure 4.10. Electrical distribution equipment to support the new non-reciprocating engine loads would be fed from U1.
- **Provide dedicated feeders from S1.** Switchgear S1 is currently being replaced, and the design includes two spare circuit breakers, one on each switchgear bus. There are no spare conduits in the existing duct banks from S1 to the south side of the plant. Thus, in this alternative, new feeders in new concrete-encased duct bank would be installed from the spare circuit breakers to a new main-tie-main, medium-voltage cogeneration switchgear. A preliminary one-line diagram showing this option is presented in Figure 4.11. Electrical distribution equipment to support the new non-reciprocating engine loads would be fed from U1.

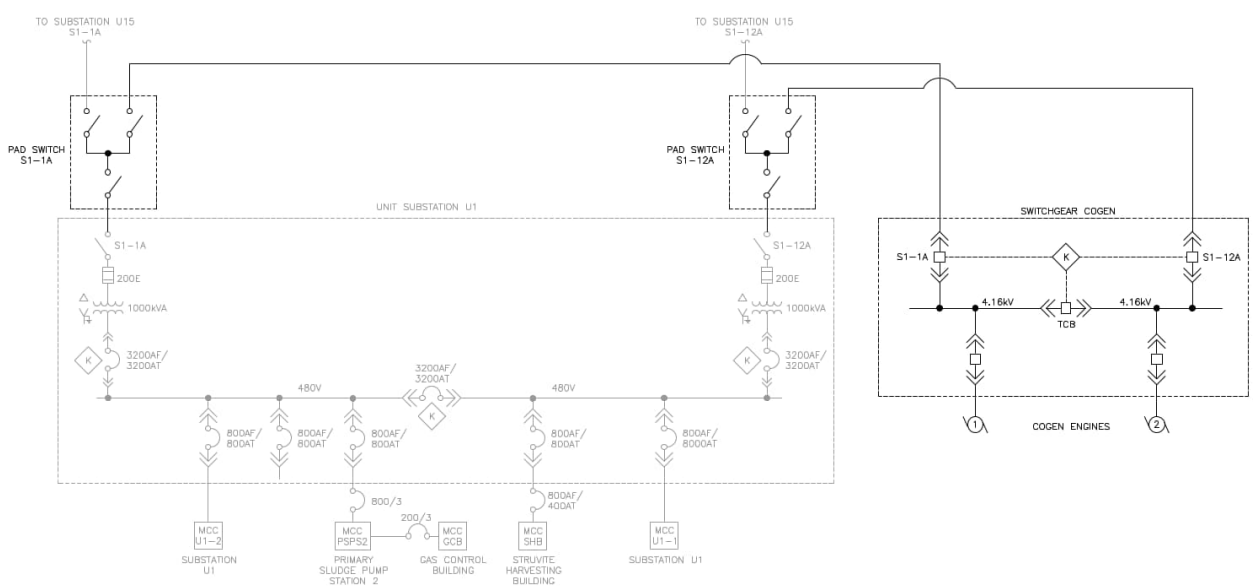

Figure 4.10 Preliminary One-Line Diagram Using Existing U1 Feeders

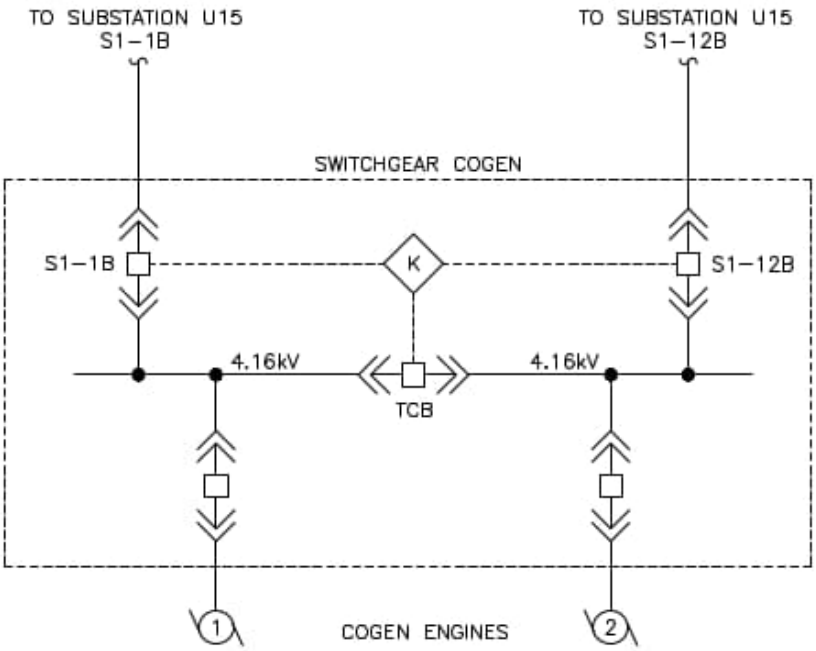

Figure 4.11 Preliminary One-Line Diagram Using Dedicated Feeders From S1

Further evaluation of these alternatives to connect the new engines to the existing electrical system should be conducted in preliminary design.

4.5.1.8 Air Permitting Impacts

Pathway 1 would require a revision of the facility's air permit to remove the existing biogas-driven blower and reciprocating engines, while adding the new engines. The existing flare will remain on the permit, as it's required to combust the biogas when the engines are offline or cannot combust peaks in biogas production.

Lean-burn engines are designed to run with a relatively high air-to-fuel ratio, which increases efficiency while decreasing nitrous oxide (NOx) formation due to cooler combustion temperatures. Further, these engines can be fitted with exhaust after-treatment equipment to further control NOx and carbon monoxide (CO) emissions if necessary to meet local air quality requirements.

4.5.1.9 Energy Impacts

Replacement of the existing engine generators will result in increased electrical and thermal production due to the greater overall efficiency of modern cogeneration equipment compared with the existing system. The two new lean-burn engine generators have a combined output of 3,006 kW and approximately 43.4-percent electrical efficiency, which is a considerable jump from the existing rich-burn engine generators that have an electrical efficiency around 27 percent. This increased electricity production reduces MMSD's reliance on external electricity. Currently, MMSD generates, on average, about 23 percent of their electricity demand from their existing cogeneration engines, while avoiding another 7.5 percent for aeration by running the engine-driven blower. In total, approximately 31 percent of overall demand is currently being met or avoided by the existing engines. Under Pathway 1, the new

cogeneration engines would generate an average of 60 percent of the electrical demand over the analysis period, almost double the current renewable energy benefit of the existing engines.

Furthermore, the new engines have a higher thermal efficiency at 46 percent as compared to 36 percent for the existing engines. The improved thermal efficiency results in less natural gas use and less demand from the boiler systems. However, as noted in section 4.5.1.6, realizing the full benefits of increased heat generation and recovery will be limited to the cold periods of the year when all produced heat can be utilized. Unless process upgrades are made to the acid phase digesters to convert the heating method from steam to hot water, then heat will need to be wasted by the engines during the warm periods of the year. In the absence of such upgrades, under Pathway 1, increased heat recovery from the new engines will lower overall natural gas and boiler demand as more heat will be offset by the engines in the winter but will also result in more heat being wasted in the summer.

4.5.1.10 Greenhouse Gas Emissions

Greenhouse gas emissions (GHG) are typically categorized as Scope 1, Scope 2, or Scope 3. Scope 1 includes direct anthropogenic (fossil fuel based) and biogenic GHG emissions related to on-site combustion and treatment processes within the system boundary. Scope 2 encompasses indirect anthropogenic emissions related to the consumption of purchased electricity, steam, heating, or cooling. All other (non-Scope 2) indirect anthropogenic GHG emissions that result from treatment operations are considered Scope 3 emissions, such as the production and the transport of chemicals. Scope 1 emissions such as direct emissions from treatment processes, fuel combustion, and fleet vehicles, are not as easily tracked or measured as Scope 2 emissions. Therefore, per MMSD's GHG assessment protocol, Scope 2 emissions are an area of focus and following its guidelines, a detailed summary of the energy use and Scope 2 emissions for the Null Pathway and Pathway 1 in 2040 are presented in Table 4.8.

Table 4.8 Design Alternatives Emissions and Energy Use Comparison Table for Pathway 1 (Cogen)

Process Description	Null Pathway (2040)					Pathway 1 (2040)				
	Operation (hr/day)	Scope 2 Emissions (MT CO_2e/yr)	Energy Used (kWh/yr)	Energy Used per MG Treated (kWh/MG)(1)	Energy Costs ($/yr)(2)	Operation (hr/day)	Scope 2 Emissions (MT CO_2e/yr)	Energy Used (kWh/yr)	Energy Used per MG Treated (kWh/MG)(1)	Energy Costs ($/yr)(2)
Biogas System	22	540	853,000	45	164,000	23	740	1,170,000	61	225,000

Notes:
CO_2e – carbon dioxide equivalents; hr – hour(s); MG – million gallons; mgd – million gallons per day; MT – metric tons; yr – year.
(1) Based on a projected flow of 52.3 mgd in 2040 per Influent Flow and Loading Projections TM (2023).
(2) Based on an energy cost of $0.192 per escalated rated to 2040.

Although Scope 2 emissions are expected to increase under Pathway 1 due to greater electricity demand from the new gas conditioning system and cogeneration engines, the overall GHG footprint is expected to improve under current and future conditions due to the improved electrical efficiency and greater capacity of the new engine generators compared with the existing. Table 4.9 summarizes the major GHG emissions and offsets related to the biogas system for Pathway 1, as compared to the Null Pathway.

Table 4.9 Pathway 1 (Cogen) GHG Emissions and Offsets

Source	Null Pathway (2040) (MT CO_2e/yr)	Pathway 1 (2040) (MT CO_2e/yr)
Emissions		
Biogas Combustion(1)	60	60
NG Combustion	3,100	3,200
Purchased Electricity (Parasitic)	540	740
Offsets		
Electrical & Thermal Energy	(12,500)	(34,000)
Emissions Summary		
Total Emissions	3,700	4,000
Total Offsets	(12,500)	(34,000)
Net Emissions	(8,800)	(30,000)

Notes:
CO_2 – carbon dioxide.
(1) Excludes biogenic CO_2, which is considered carbon neutral and not required for reporting.

The more efficient engines will be able to generate more electricity and offset a larger portion of plant-wide electrical demands and associated GHG emissions for the same amount of biogas. Similarly, increased thermal efficiency will improve and increase heat recovery from the engines, further offsetting natural gas and heating demands. The offsets from increased electrical and thermal efficiency and production are assumed to grow in proportion to the increase in biogas production expected in the future. Consequently, Scope 1 emissions and the emissions resulting from biogas combustion are also expected to increase. However, the GHG calculation excludes biogenic CO_2, which is considered carbon neutral and is not considered for reporting requirements, therefore, the GHG intensity, or amount of GHGs released per unit energy or fuel consumed, for biogas combustion is low, leading to a negligible impact on overall GHG emissions. Scope 1 emissions from natural gas combustion are expected to increase more significantly but are far outweighed by the increase in emissions offsets from greater electricity generation and heat recovery of the new cogeneration engines.

4.5.2 Capital and Life Cycle Costs

This section summarizes the capital and life cycle costs that were developed for Pathway 1. The business case evaluation includes project and life-cycle costs to implement, operate, and maintain the upgraded cogeneration system and biogas conditioning system. The evaluation also includes a summary of how the decision criteria documented in TM 1 apply to Pathway 1.

4.5.2.1 Capital Costs

The total project cost estimate calculated in 2025 dollars for Pathway 1 is $26,614,000, as shown in Table 4.10. A detailed project cost estimate is provided in Appendix 4A. This estimated cost includes construction of a new cogeneration building, new biogas conditioning, two 4,160-volt 1.5-MW cogeneration engines and associated cogeneration appurtenances (heat recovery equipment, switchgear, radiators, silencers, etc.), and two hot water recovery pumps. Vendor cost proposals are provided in Appendix 4B.

Table 4.10 Pathway 1 (Cogen) Estimated Project Cost

Description		Cost
Direct Costs (includes construction allowances)		$15,428,000
General Conditions Allowance	15%	$2,314,000
Contractor Overhead and Profit	20%	$3,086,000
Bonds and Insurance	3%	$463,000
Total Construction Cost		$21,291,000
Engineering Legal, and Administrative Fees	15%	$3,194,000
Construction Management	10%	$2,129,000
Total Project Cost Estimate		$26,614,000

4.5.2.2 Annual Operations and Maintenance Costs and Revenues

The cogeneration system O&M cost assumptions include the following:

- Natural gas cost for digester heat.
- Natural gas cost for steam heat.
- Cogeneration and conditioning system O&M.
- Engine generator rebuild cost.
- Biogas conditioning media replacement.
- Parasitic electrical loads.

As noted in Section 4.4, 12 percent of current biogas production is typically used in the boilers under current operation. With the upsized engines proposed in Pathway 1, the vast majority of biogas will be used for cogeneration, with natural gas used in the boilers to offset additional heat demand that is not met by the heat recovery of the cogeneration system during periods of high heat demand. Additionally, natural gas is assumed to be used in the steam boilers under this pathway.

Cogeneration system O&M costs include costs for MMSD operations staff (labor and maintenance) and consist of regular activities such as oil changes, spark plugs, and replacement of other consumables (e.g., air filters, coolant, batteries, etc.). Occasional maintenance is also required for the chillers, blowers, and heat exchangers associated with the biogas conditioning system. These include activities such as chiller refrigerant replacement, blower bearing replacement, and heat exchanger flushing. This annual cost was calculated as 4 percent of equipment costs, which is comparable to the cost of a typical service contract.

Longer term engine O&M includes periodic top end rebuilds (new valve springs, heads, piston rings, etc.) and generator refurbishment. Engines also require full rebuilds after about 60,000 hours of run-time (run-hours is manufacturer dependent and some have longer durations between major rebuilds). This service is a major overhaul of the engine typically performed by a certified manufacturer's service provider and includes major items like a new engine block, new crankshaft, new heads, new rotational equipment, and all new seals and bearings. The new block can be pre-ordered when the existing engine is near its rebuild period to minimize engine downtime. Engine rebuild costs, which have been annualized for the purposes of this evaluation, were based on manufacturer quotes. Most manufacturers offer full-service contracts to perform all regularly scheduled maintenance based on the manufacturer's requirements,

however, this was not used in this analysis. Instead, the analysis assumed 4-percent of the equipment cost for operations and maintenance of the cogeneration and gas conditioning systems.

Biogas conditioning media replacement costs consist mainly of media replacement for the H_2S and siloxane removal vessels. Based on initial vendor proposals received, media changeout is anticipated to be required one to two times per year, depending on the process.

Anticipated revenues for Pathway 1 include savings in electricity purchased due to the production of electricity from the cogeneration engines as well as natural gas reduction savings.

4.5.2.3 Net Present Value

Carollo developed the NPV for Pathway 1, which evaluated the costs and utility cost offsets (electricity and natural gas) associated with cogeneration over the estimated 20-year life of the equipment from 2029 through 2048. For the analysis, project cost was escalated to 2028 dollars at 3.5 percent escalation rate in order to calculate the NPV of capital at the beginning of the 20-year cycle. Assumptions used for the analysis are summarized in section 4.3.

A summary table presenting the NPV of capital and operating costs over a 20-year life is shown in Table 4.11. The NPV calculations for this alternative are included in Appendix 4C.

Table 4.11 Pathway 1 (Cogen) Net Present Value

	Costs/(Revenues)
Estimated Project Cost (escalated to 2028)	$29,507,000
Annual Costs(1)	$1,152,000
Natural Gas Cost for Hot Water Heat, $/year	$154,000
Natural Gas Cost for Steam Heat, $/year	$272,000
Cogeneration and Biogas Conditioning System O&M, $/year	$200,000
Engine Generator Rebuilds (annualized), $/year	$186,000
Biogas Conditioning Media Replacement, $/year	$340,000
Annual Revenues	
Power Savings, $/year	($3,370,000)
Net Annual Costs/(Revenues), $/year	($2,218,000)
Net Present Value	($14,266,000)
Payback Period, years	13 years

Notes:
(1) Costs presented are average costs over the 20-year period from 2029 through 2048.
(2) Cogeneration revenue represented as electrical costs off-sets or saved electrical costs.

This alternative has a 20-year NPV of $14 million and translates to a payback of approximately 13 years.

Additionally, NPV was also calculated for two separate scenarios under Pathway 1 to account for varying biogas conditions as described below:

1. Fats, Oils, and Grease (FOG) Digestion: FOG digestion converts lipid-rich wastes such as fats, oils, and grease into biogas, significantly producing more methane yields due to their high energy content. For this analysis, biogas production was increased by 144,000 cubic feet per day (cfd) (100 scfm) and the payback stays the same at 13 years with a 20-year NPV of $16 million.

2. Thermophilic digestion operates at elevated temperatures compared to mesophilic digesters, typically between 50 degrees Celsius (°C) and 60°C (122 degrees Fahrenheit [°F] to 140°F). The higher temperature enhances microbial activity and accelerates the breakdown of organic matter, especially complex and energy-rich compounds, typically resulting in higher biogas production than mesophilic digestion. For this analysis, the biogas production was increased by 10 percent, and the hot water heat demand was increased by 40 percent. The payback for this scenario was increased to 14 years with a 20-year NPV of $11.5 million.

Sensitivity Evaluations

To evaluate the financial viability based on changing future conditions, sensitivity analyses were developed for Pathway 1. All scenarios include the baseline capital costs, operating expenses, and revenues, with the addition or modification of costs and revenues as described below.

1. Scenario 1: Sale of renewable energy certificates. This scenario includes REC revenue in addition to the revenue associated with electricity offsets. A REC value of $3/MMBtu was used for this evaluation. The payback for this scenario stays the same at 13 years with a 20-year NPV of $16 million.
2. Scenario 2: ISCC Certification. As noted above, registering for ISCC credits could translate to approximately $900,000 per year based on MMSD's current biogas production. The payback for this scenario is reduced to 9 years with an NPV of $36 million. However, as noted above, this revenue is not anticipated to be realized based on concerns by the certifying body around the traceability of biomethane across multiple private grid operators in the United States.
3. Scenario 3: Increased electrical cost. Cost of electricity was increased by 10 percent for this evaluation. The payback for this scenario is reduced to 11.5 years with a 20-year NPV of $21 million.
4. Scenario 4: Increased natural gas cost. Cost of natural gas was increased by 10 percent for this evaluation. The payback for this scenario is increased to 13.5 years with a 20-year NPV of $13.5 million.
5. Scenario 5: Reduced gas conditioning media replacement cost. Based on feedback from MMSD on current media replacement costs, this scenario incorporates a reduced media replacement cost of $100,000/year. The payback for this scenario was reduced to 12 years with a 20-year NPV of $19 million.

These scenarios are presented graphically as compared to the baseline for Pathway 1 in Figure 4.12.

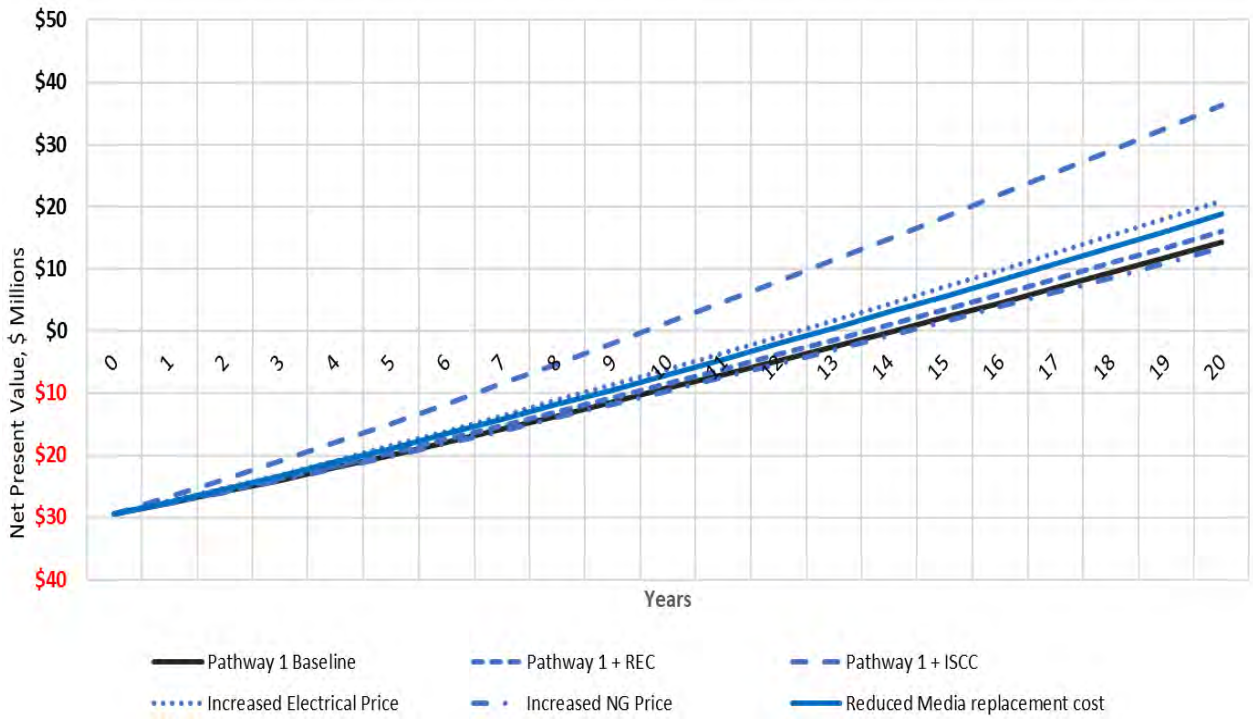

Figure 4.12 Pathway 1 (Cogen) Sensitivity Analysis

Additionally, while not done as part of the sensitivity analyses shown above, Carollo entered information for two 1.84 MW engines into the NPV calculation to compare expected payback and NPV to the base recommendation of two 1.5 MW engines. Assuming 41 percent electrical efficiency to account for part load operation efficiency losses, two 1.84 MW engines extend the payback by approximately 2 to 3 years and decrease NPV by $6 million compared to the base recommendation of two 1.5 MW cogeneration engines.

4.6 Pathway 2 - Renewable Natural Gas Evaluation

Pathway 2 includes replacement of MMSD's existing engine generators with a biogas upgrading system to inject RNG into the natural gas pipeline. This requires upgrading the biogas to remove siloxanes, H_2S, VOCs, CO_2, and moisture and compressing the RNG for injection into the natural gas supply pipeline. An interconnect facility (designed and constructed by the natural gas utility) is also required. A process flow diagram of Pathway 2 is presented in Figure 4.13. Biogas will be collected from the digesters, sent through H_2S removal vessels and compressed to undergo moisture, siloxane, and VOC, and CO_2 removal prior to injection into the pipeline. If the biogas upgrading system is out of service for maintenance, biogas will be routed to the dual fuel boilers and/or to the waste gas flare.

Unlike Pathway 1, the RNG evaluation does not consider use of the treated biogas in the boilers for process heat. Use of RNG in the boilers is possible, though due to the compressor's electrical demand, it is likely more expensive to use RNG in the boilers as compared to purchasing natural gas. Use of off-spec RNG in the boiler is also possible, but if the RNG does not meet quality requirements, there is likely an issue with the upgrading equipment that requires operator or maintenance staff attention, and the system will need to be shut down.

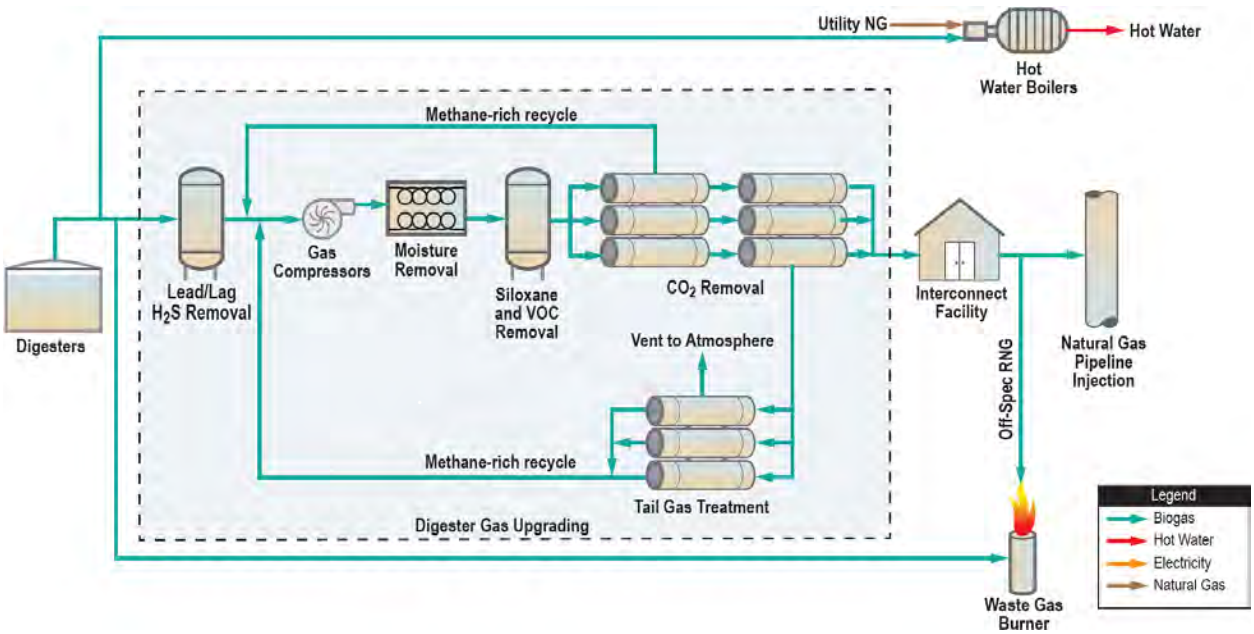

Figure 4.13 Pathway 2 (RNG) Process Flow Diagram

4.6.1 Renewable Natural Gas Interconnect

For participation in the RFS program, the produced RNG must be utilized as vehicle fuel (termed compressed natural gas [CNG] due to the high pressures required), which can be accomplished in two ways. The first is a direct to vehicle fueling station, which would require additional compression, storage, and fueling infrastructure. Although this study did not evaluate the available CNG-fueled fleets in the area, it is unlikely that local CNG demand could utilize all the RNG produced at the NSWTP.

The pipeline injection alternative consists of injecting the RNG into an existing natural gas pipeline. A third party fueling station pulls natural gas from the pipeline, compresses it to CNG, and fuels vehicles similar to the first option. Accounting must be done to track the quantity of RNG injected by the producer and removed by users and then certify the RINs.

Two of the following alternatives, MG&E and ANR Pipeline Company (ANR), are straightforward pipeline injection, while the third is a "virtual pipeline" which consists of filling a truck-mounted, high pressure storage vessel at the NSWTP, trucking it to the Dane County Landfill, and discharging through the landfill's existing injection station.

All the alternatives in the following sections require long-term agreements with the individual receiving entities, which creates reliance on external parties for operation.

4.6.1.1 Madison Gas and Electric

MG&E is MMSD's natural gas provider and while MG&E does not currently have any RNG producers injecting into their system, they have recently developed draft RNG standards, as shown in Table 4.12. MG&E intends to submit these draft standards in a 2025 rate case filing and, if approved, the tariff would be effective in January 2026.

Table 4.12 MG&E Renewable Natural Gas Draft Quality Requirements

Constituents/Properties	Limit	Units
Higher Heating Value	>966	Btu/scf
CO_2 (mol %)	2.0	mol %
Oxygen	0.5	mol % (instantaneous)
Total Inerts	5.0	mol %
H_2S	4	ppm
Total Sulfur	16	ppm
Water Vapor Content	7	lb/MMscf
Nitrogen	3	mol %
Temperature	35 - 140	°F
Wobbe Index	1274 - 1380	°F

Notes:
lb/MMscf - pounds per million standard cubic feet; scf - standard cubic foot.

Based on discussions with MG&E, the anticipated interconnect location would be into the 12-inch pipeline located directly west of the Nine Springs Substation. MG&E confirmed that this pipeline has sufficient capacity for the projected future RNG flow rate. The maximum allowable operating pressure (MAOP) of the pipeline is 175 psig, though normal operating pressures are lower. MG&E recommended an RNG discharge pressure of 220 psig to ensure sufficient pressure differential through the regulation equipment when the pipeline is operating at the MAOP. The required inlet pressure can be better-defined during a capital project to confirm that additional compressors will not be required.

MG&E requires specific equipment prior to injection, including an analyzer shelter, regulation station, odorizer, and supervisory control and data acquisition system, referred to collectively as the Interconnect Facility. MG&E is open to constructing a new pipe to convey RNG to the existing 12-inch natural gas pipeline and locating their interconnect facility on an easement on MMSD's property. MG&E's estimated the cost for the interconnect facility and RNG pipeline is $3 million +/- 15 percent. A value of $3.5 million was used in this evaluation.

4.6.1.2 ANR Pipeline

Carollo also had a discussion with TC Energy, the operator of the ANR pipeline that Dane County Landfill injects into. This pipeline was evaluated as a potential RNG injection point as part of the 2020 EMMP because at that time, MG&E did not indicate a willingness to allow RNG injection into their system. TC Energy believes it will be cost-prohibitive for MMSD to inject RNG into the ANR pipeline due to their interconnect facility costs and the length of pipeline required to get to the ANR pipeline from the NSWTP.

Although the interconnect facility would be similar to MG&E's equipment, ANR's minimum interconnect facility capacity is 5 million cfd, which is significantly oversized for MMSD's production (approximately 0.6 million cfd), meaning the costs for the interconnect would be for significantly oversized equipment. TC Energy would require compression to 900 psi and an approximately 3-mile, 2-inch diameter pipeline to connect into the existing ANR pipeline, and the operating costs to compress to the higher pressure have not been quantified. ANR estimated that an interconnect facility and RNG pipeline would cost $10 million.

4.6.1.3 Dane County Landfill

Another option for injecting into the ANR pipeline is to truck RNG from NSWTP to the existing interconnect facility at the Dane County landfill. Based on information provided by TC Energy, it appears that this existing interconnect facility has sufficient capacity to accept RNG from NSWTP. Natural gas storage trucks, also known as virtual pipeline trailers, store compressed natural gas for transport. Each truck can typically hold around 0.5 million cubic feet at a pressure of 4,200 psi. This would equate to approximately 1 truck per day. If MMSD were to pursue this option, two trucks could be purchased, with one used for filling and one for transport in rotation. A product gas compressor would be required at the NSWTP to compress the RNG to 4,200 psi.

4.6.1.4 Comparison of Interconnect Options

Interconnection into MG&E's natural gas pipeline is the basis of this analysis due to the following criteria:

- Capital cost:
  - MG&E's smaller interconnect designed for the NSWTP's RNG production is significantly cheaper than the standard ANR interconnect size.
  - Distance to MG&E's existing natural gas pipeline is shorter than the existing ANR natural gas pipe.
- Operating cost:
  - Compressing to 220 psig for the MG&E pipeline will require significantly less electricity than reaching the 900 psig ANR pipeline.
- Operational complexity:
  - Pipeline injection is much more straightforward relative to coordination of multiple trucks in a virtual pipeline and injection at the Dane County interconnect facility arrangement.

The interconnection options can be re-evaluated during a potential future RNG project's preliminary design stage to confirm each is a viable alternative and update the economic evaluation.

4.6.2 Basis of Design

4.6.2.1 Biogas Upgrading Technologies

Four biogas upgrading technologies are generally used in the industry to produce pipeline-quality RNG: membrane, pressure swing adsorption, amine, and water wash. Membrane and pressure swing adsorption are "dry" upgrading systems that physically separate methane (CH_4) from CO_2 and other impurities based on molecule size, pressure, and ionic charge. Amine and water wash are "wet" upgrading systems that separate CH_4 from CO_2 and other impurities by dissolving the impurities into a liquid stream. Earlier in this project, Carollo developed the Biogas Upgrading System Technology Review Project Memorandum comparing the options for biogas upgrading technologies and recommending a three-stage membrane system because they are widely used at WRRFs, are cost-effective at lower size ranges, and have simpler O&M compared to the other upgrading technologies. The Project Memorandum is included as Appendix 4D and the section below summarizes the membrane upgrading process.

Pretreatment

Hydrogen sulfide, siloxanes, VOCs, and moisture must be removed for membrane upgrading to both meet the natural gas pipeline's quality requirement and prevent membrane fouling and replacement. The processes are similar to the biogas conditioning processes for Pathway 1 discussed above. This section will describe how the treatment differs from cogeneration biogas conditioning.

The H_2S removal processes are identical to the biogas conditioning, though the outlet requirement is typically more stringent than the cogeneration technologies. This Facility Plan recommends the same treatment as biogas conditioning, using two lead-lag vessels filled with an iron-based media.

In addition to siloxane removal for cogeneration, VOCs must be removed as part of the biogas upgrading process to meet the natural gas quality requirements and prevent membrane fouling. GAC remains the industry-standard technology for removal of both constituents, though due to the higher operating pressures of biogas upgrading, the vessels are smaller, and four are recommended. These vessels are operated in series, but typically do not have a lead/lag design due to the complexities of piping with the number of vessels.

Instead of a biogas blower, membrane upgrading requires an oil-flooded screw compressor to reach the operating pressure of the membranes and flow into the natural gas pipeline. At NSWTP's flow rate, two compressors are recommended, each with an oil cooler and a filtration system to remove oil droplets from the biogas.

Downstream of the compressors, a moisture removal system including a chiller, heat exchangers, and moisture knockout vessels is required. The design of these systems is very similar to the biogas conditioning system, the major difference is the equipment is designed around the higher pressures and temperatures produced by the flooded screw compressor.

Membrane Upgrading

Membrane upgrading generally operates at pressures between 150 and 200 psig, depending on the specific membranes selected and downstream pipeline pressure requirements. For the MMSD analysis, biogas would be compressed to approximately 190 psig during normal operations, though the proposed equipment can compress to MG&E's recommended 220 psig when required. The biogas is conveyed inside the tubular membrane tubes and smaller molecules like CO_2 flow through the membrane's pores, while the larger CH_4 molecules are retained inside the membrane. The separation is not exact, so a small portion of the CH_4 flows through the membranes and some CO_2 is retained within the membranes. A diagram of the membranes is illustrated in Figure 4.14.

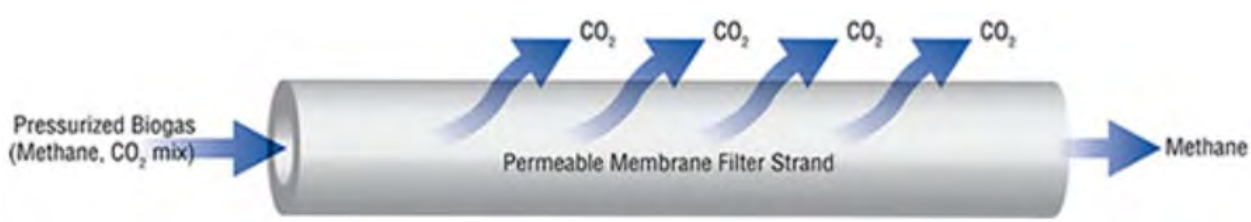

Figure 4.14 Membrane Biogas Upgrading

A two-stage membrane system, with the membranes operating in series, can achieve approximately 95 percent CH_4 recovery. A three-stage membrane system, where the tail gas from the first stage membrane is routed through a third membrane, can achieve up to 99 percent CH_4 recovery. Figure 4.15 shows the full process flow, including two- or three-stage membrane treatment. Three-stage membrane system was assumed for this evaluation. Tail gas from a three-stage membrane system can typically be discharged directly to the atmosphere.

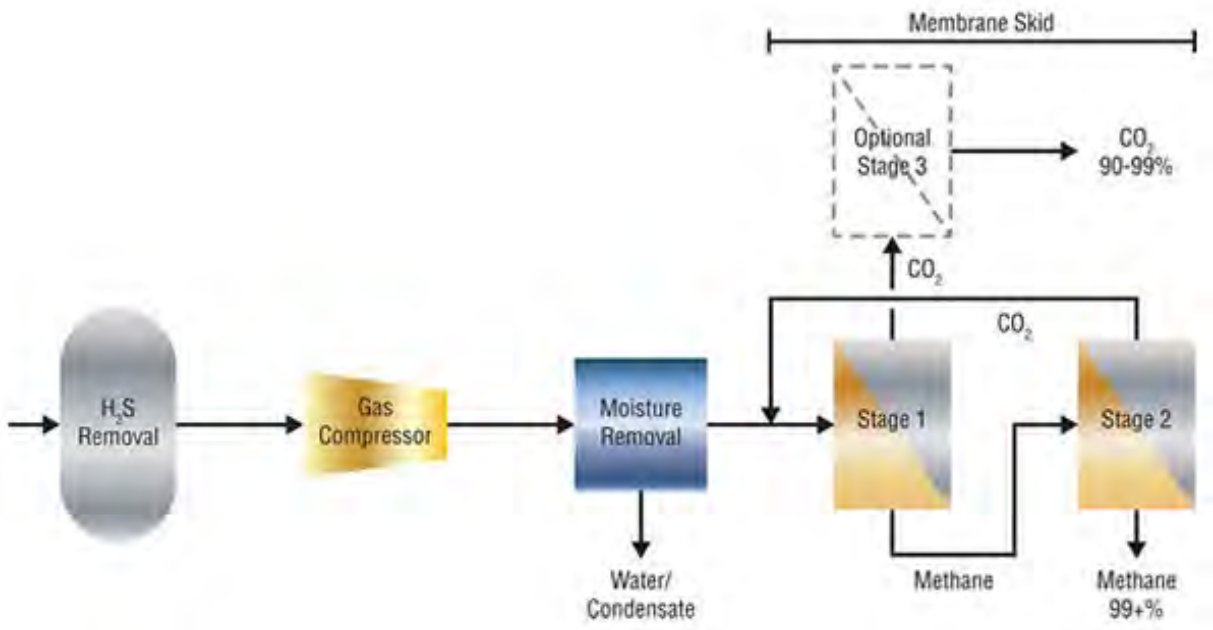

Source: Biocycle.

Figure 4.15 Multi-Stage Membrane Treatment

There are many membrane system manufacturers, including Unison, DMT Clear Gas, GraniteFuel, Greenlane Biogas, AB Energy, Suez "Methanis", Nissen, and Air Liquide.

The typical footprint of gas conditioning and a three-pass membrane system is 50-feet by 50-feet. It is recommended to locate this facility as close as possible to the anaerobic digesters. The facility typically consists of gas conditioning vessels located outdoors and the compressor and membranes located within a prefabricated enclosure or dedicated building.

Once the gas is treated to pipeline quality, it will flow through MG&E's interconnect facility. The Interconnect Facility equipment would be designed and installed by MG&E in a space approximately 50 feet by 50 feet.

4.6.2.2 Biogas Upgrading Sizing

Biogas upgrading equipment is sized based on the raw biogas flow rate, with considerations for future service area growth, desire to add or increase additional feedstock, and other drivers for biogas use. Due to the number of interrelated systems and complexity of the upgrading process, most upgrading manufacturers provide what are essentially custom systems, within general ranges guided by major components like compressors.

TM 2 calculated an average daily gas production of 1,102,000 scfd, which equates to 765 scfm. The biogas upgrading system will be sized to capture all of the biogas production to maximize the revenue from pipeline injection. To align with general sizes provided by manufacturers and to capture peaks in biogas production, the biogas upgrading equipment is sized for 800 scfm of raw biogas flow. Biogas upgrading systems are generally capable of turndown to 30 percent of listed capacity using the compressor's VFD and internal recirculation loops whose primary design functions are outlet RNG quality and methane capture. The turndown will allow the upgrading system to capture the average flows at the commissioning date and times of lower production.

These systems can be sized for future capacity if there's a possibility to increase biogas flow through additional population growth or intake of new digester feedstock. Vessels and piping can be sized for larger flows without significant capital cost increases, and compressors can be oversized or designed for future replacement or supplemented with an additional unit. Empty or partially filled membrane racks can be installed to be filled as-needed when flows increase for a relatively small capital cost increase at the beginning of the project.

Table 4.13 shows the design criteria of the biogas upgrading equipment. Historical raw biogas quality is documented in TM 2.

The entire system should be designed in accordance with the National Fire Protection Association (NFPA) 820 "Standard for Fire Protection in Wastewater Treatment and Collection Facilities", which requires explosion-proof electrical classification of hazardous areas.

Table 4.13 Pathway 2 (RNG) Design Criteria

Upgrading System Parameters	Value
Design Flow Rate (scfm)	800
H_2S Treatment	
Technology	Engineered iron-hydroxide media
H_2S vessel quantity	2 (lead/lag)
Outlet concentration, ppm	<4
Projected media life, days (per vessel)	135
Compression	
Technology	Oil-flooded screw compressor
Quantity	2
Motor size (hp)	300
Discharge Pressure, psi	190(1)
Moisture Removal	
Technology	Chilling and knockout vessel
VOC/Siloxane Removal	
Technology	Activated carbon media
Vessel quantity	4 (series)
Siloxane outlet concentration, ppmv	<1 ppmv (total)
Projected media life, days (total)	180

Upgrading System Parameters	Value
Methane Separation	
Technology	Membranes
Treatment stages	3 (2 process, 1 recycle stream)
RNG flow rate, scfm	509
Tail gas flow rate, scfm	290
Methane recovery, %	99.5

Notes:
ppmv - parts per million by volume.
(1) 190 psig is the assumed typical discharge pressure. When the natural gas pipeline is operating at higher pressures closer to the 175 psig MAOP, the equipment can achieve 220 psig, the maximum required to flow through the MG&E interconnect.

4.6.2.3 Biogas Upgrading Layout

The biogas upgrading system will be located inside a 50-foot by 50-foot building to provide freeze protection and facilitate O&M activities. A 50-foot by 25-foot concrete pad extending from the building is proposed for the H_2S and siloxane/VOC treatment vessels, which will be located outdoors due to their size and need for access by large trucks to fill and remove media. The glycol chiller and oil cooler will also need to be located outdoors to discharge heat for the cooling processes.

A proposed layout of the biogas upgrading system on the NSWTP plant site is presented in Figure 4.16.

Like Pathway 1, under Pathway 2, the biogas upgrading system is recommended to be located in the greenfield area east of the Struvite Harvesting Building. The proposed location is consistent with MMSD's Capital Project Infrastructure Placement Plan and the siting options for new heat and power infrastructure identified in that plan. The new system would tie into the existing biogas distribution piping immediately downstream of the sludge storage tanks and Digesters 1 and 2. The new biogas piping, shown in orange, will convey raw biogas from the sludge storage tanks and digesters to the new gas upgrading skid. As noted under Pathway 1, the existing gas piping in the tunnel is 6-inch and 8-inch. Further evaluation is required to confirm that the existing gas piping is sized appropriately to convey the projected 2050 flows, depending on which digesters are assumed to be in service (as the existing piping conveys flows from two directions and thus does not convey the full flow). The new biogas piping routed to the upgrading system is recommended to be minimum 12-inch diameter.

Downstream of the biogas upgrading system, RNG will flow to the interconnect facility, which is proposed to be located just to the southwest. RNG is odorless and undetectable by smell, thus it is advisable to shorten the run from the RNG building to the interconnect facility (where odorant is added) as a safety precaution. From there, RNG will flow through a new RNG pipe, shown in red, proposed to follow a path through the plant alongside existing utilities to minimize the route distance to the injection point on MG&E's existing 12-inch natural gas pipeline running east and west shown in cyan on Figure 4.17. The RNG piping will ultimately be designed and installed by MG&E and will need to be located on an easement on MMSD's property. RNG that does not meet MG&E's quality requirements (off-spec gas) will be routed by new piping, shown in blue, to the existing flare via the existing biogas pipe galleries and tunnels that connect the existing biogas system.

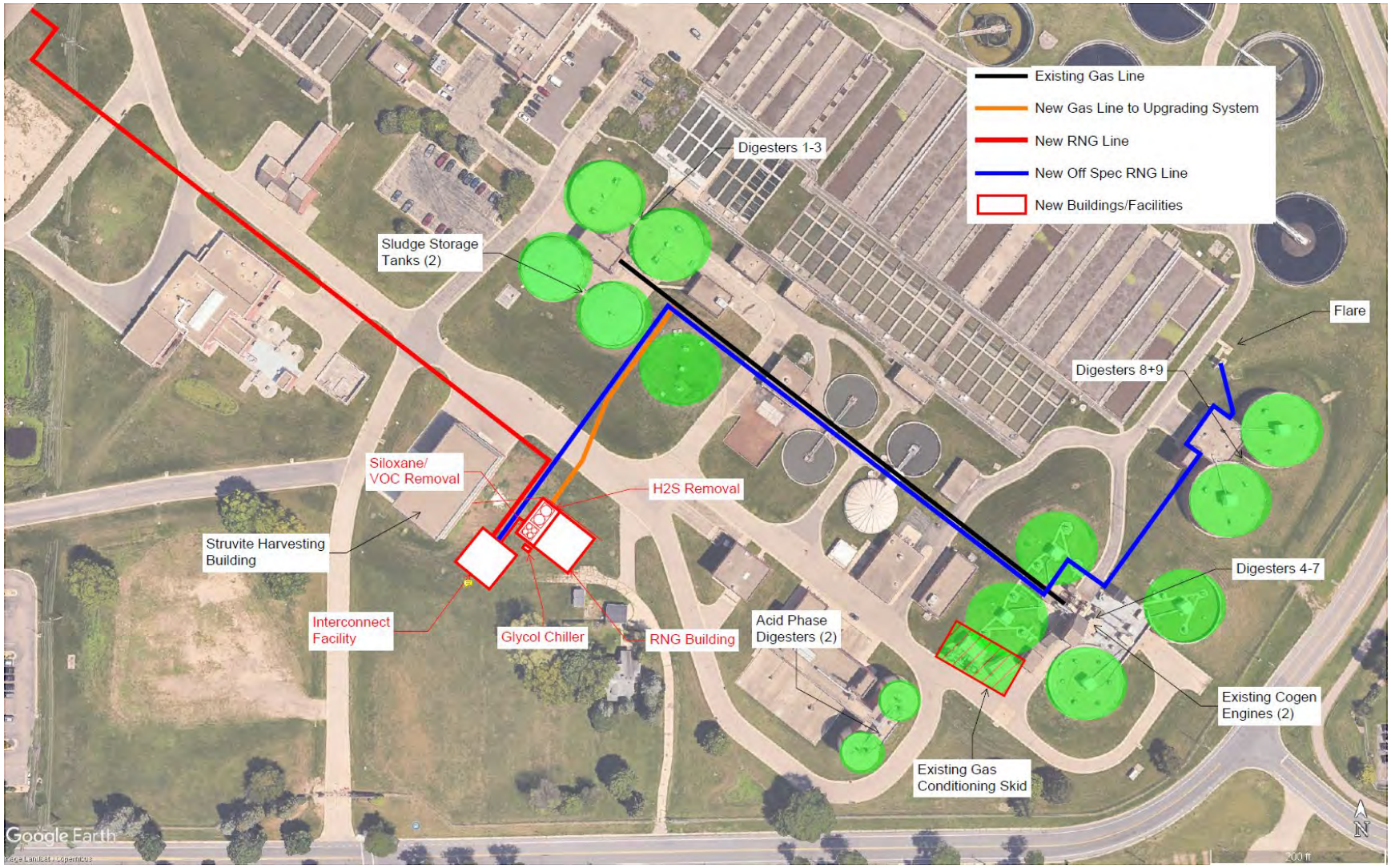

Figure 4.16 Pathway 2 (RNG) Proposed Site Layout

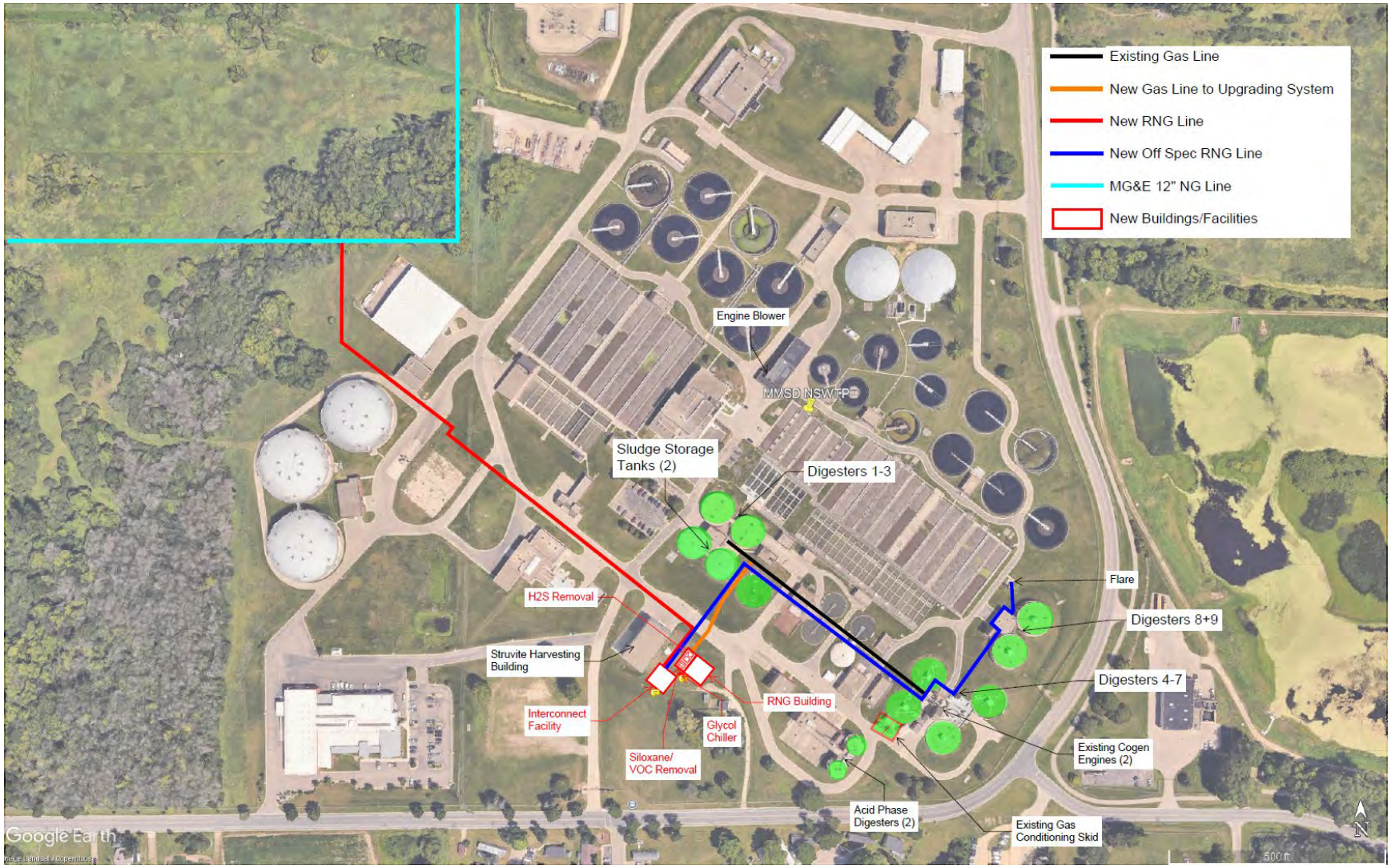

Figure 4.17 Renewable Natural Gas Piping to Injection Point

An alternative location for the MG&E interconnect facility would be closer to the natural gas pipeline injection location. Decision-making considerations include ability to odorize the RNG for safety and coordination with MG&E to provide an easement for the interconnect and pipeline across the site. A notable advantage of the option presented is minimizing the length of the off-spec RNG pipeline.

4.6.2.4 Impact to Existing Thermal Energy Infrastructure

Pathway 2 requires that thermal energy throughout the site be provided by either electricity or natural gas since all biogas is converted to RNG and used off-site. The removal of heat provided by the cogeneration engines simplifies the hot water system. As noted in TM 5, additional boiler capacity is required to provide sufficient heat for all operating conditions.

4.6.2.5 Electrical Improvements

Pathway 2 has a higher electrical load as compared to Pathway 1, which must be considered when evaluating the electrical infrastructure. The proposed biogas upgrading system has an electrical load of approximately 460 kW, which was used for the life cycle analysis. When the natural gas pipeline is operating at its MAOP of 175 psig and the compressors need to produce 220 psig, the electrical load increases to 500 kW.

The existing electrical demand and available capacity on nearby Substation U1 needs to be reviewed, and if capacity is available, the RNG system would be fed from a new circuit breaker in the 480-volt U1 switchgear. A preliminary one-line diagram showing this option is presented in Figure 4.18. If capacity is not available on U1, alternatives such as available capacity on other nearby substations (U3 or U15) or upgrades to increase capacity on U1 (such as replacing the transformers which, at 1,000 kilovolt-amperes [kVA], are smaller than MMSD's standard minimum size of 1,500 kVA) would need to be reviewed. Substation U1 was installed in 1995. The typical useful life of the electrical equipment is 30-35 years and replacing or upgrading the equipment should be considered.

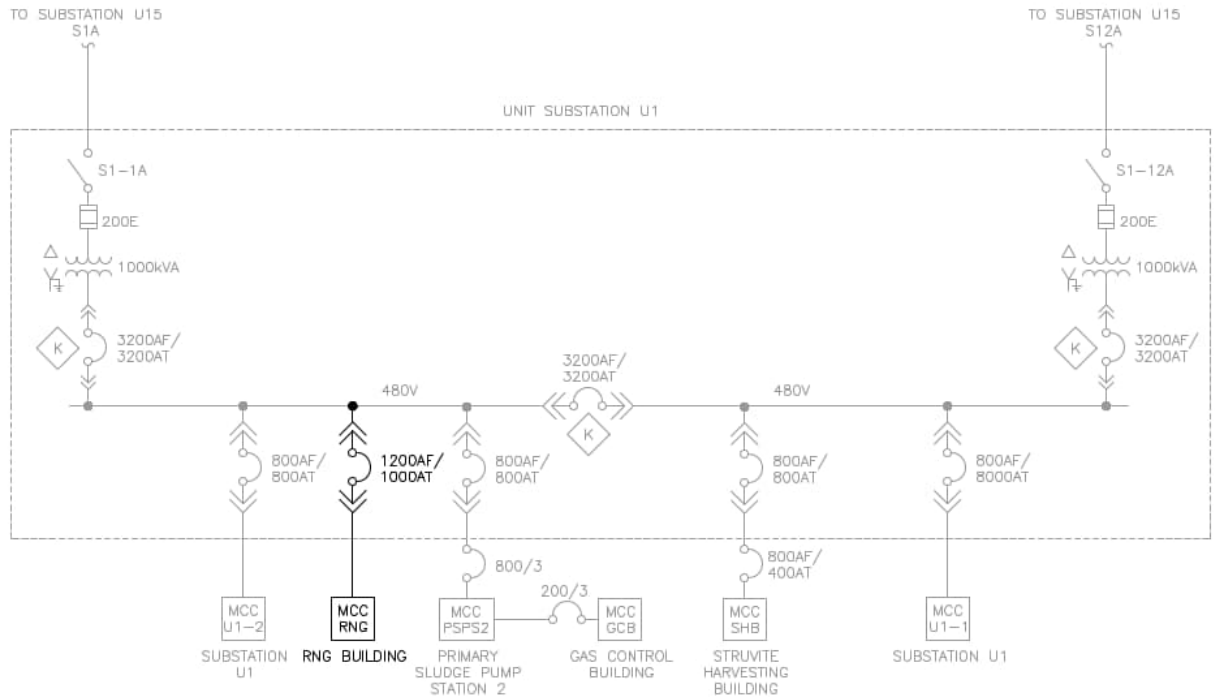

Figure 4.18 Pathway 2 (RNG) Preliminary One-Line Diagram

4.6.2.6 Air Permitting Impacts

Pathway 2 will require maintaining the existing waste gas flare on the air permit, as it would be used when the biogas upgrading system is offline for maintenance or cannot handle spikes in biogas production. The air permit would need to be modified to remove the existing combined heat and power (CHP) engines and biogas-driven blower and add a new emission source for the tail gas. Due to the third stage of membrane treatment, the tail gas is almost entirely CO_2 and can typically be discharged directly to the atmosphere. If required by the local air emissions agency, the tail gas can be treated using a regenerative thermal oxidizer before being discharged to atmosphere to combust trace methane into CO_2.

4.6.2.7 Energy Impacts

Under Pathway 2, all biogas would be upgraded to RNG for pipeline injection and none of the gas would be beneficially used on site for electricity production or heating purposes. This results in considerably more purchased electricity and natural gas relative to baseline since they will exclusively be responsible for meeting all onsite electricity and heating demands. On an annual average basis under current conditions, approximately 31 percent of NSWTP electrical demand is met or avoided by the existing engines and over 85 percent of the NSWTP's hot water energy demand is generated by either biogas-fed boilers or recovered from the engines. Under Pathway 2, purchased electricity and natural gas will need to fill that energy gap, which can be expected to increase further as demands increase in the future.

4.6.2.8 Greenhouse Gas Emissions

Per MMSD's GHG assessment protocol, a detailed summary of the energy use and Scope 2 emissions for the Null Pathway and Pathway 2 in 2040 are presented in Table 4.14. The GHG footprint under Pathway 2

is expected to increase, in part, due to the considerable increase in purchased electricity to make up for the lost on-site electricity generation from the cogeneration engines.

Table 4.14 Design Alternatives Emissions and Energy Use Comparison Table for Pathway 2 (RNG)

Process Description	Null Pathway (2040)					Pathway 2 (2040)				
	Operation (hr/day)	Scope 2 Emissions (MT CO_2e/yr)	Energy Used (kWh/yr)	Energy Used per MG Treated (kWh/MG)(1)	Energy Costs ($/yr)(2)	Operation (hr/day)	Scope 2 Emissions (MT CO_2e/yr)	Energy Used (kWh/yr)	Energy Used per MG Treated (kWh/MG)(1)	Energy Costs ($/yr)(2)
Biogas System	22	540	853,000	45	164,000	23	2,210	3,470,000	182	665,000

Notes:
(1) Based on a projected flow of 52.3 mgd in 2040 per Influent Flow and Loading Projections TM (2023).
(2) Based on an energy cost of $0.192/kWh per escalated rate to 2040.

Since all biogas will be sent for upgrading and RNG injection, the resulting increase in natural gas consumption for heating is expected to substantially increase Scope 1 emissions and increase overall emissions even more significantly. Table 4.15 summarizes the major GHG emissions and offsets related to the biogas system for Pathway 2, as compared to the Null Pathway.

Table 4.15 Pathway 2 (RNG) GHG Emissions and Offsets

Source	Null Pathway (2040) (MT CO_2e/yr)	Pathway 2 (2040) (MT CO_2e/yr)
Emissions		
Biogas Combustion(1)	60	0
NG Combustion	3,100	6,300
Purchased Electricity (Parasitic)	540	2,200
RNG Combustion(1)	--	600
Tail Gas Venting(1)	--	530
Offsets		
Electrical & Thermal Energy	(12,500)	--
Diesel	--	(10,200)
Emissions Summary		
Total Emissions	3,700	9,630
Total Offsets	(12,500)	(10,200)
Net Emissions	(8,800)	(570)

Notes:
(1) Excludes biogenic CO_2, which is considered carbon neutral and not required for reporting.

Although the emissions from biogas combustion go to zero under Pathway 2, the GHG benefit to Scope 1 emissions are negligible when compared to the Null Pathway because the CO_2 emissions, the greatest source of emissions from biogas combustion, are biogenic and excluded from the calculation. Instead, Scope 1 emissions are dominated by natural gas combustion, more than doubling its emissions contribution as compared to the Null Pathway, to compensate for all the biogas getting sent for RNG upgrading. Furthermore, under Pathway 2, Scope 1 emissions sources are added to account for the emissions from the combustion of RNG and the venting of tail gas from the biogas upgrading system.

However, both additional emissions sources modestly contribute to overall emissions when excluding biogenic CO_2 emissions, as the tail gas is primarily composed of CO_2.

Biogas upgraded to RNG is chemically equivalent to conventional natural gas, and when exported off-site, it will be combusted elsewhere. The economic analysis in later sections assumes use as vehicle fuel. The system boundaries for the GHG analysis extend beyond the plant to include off-site combustion, capturing both the GHG offset and added emissions from the beneficial use of RNG. The GHG benefit, though, far outweighs any additional combustion emissions. The production of RNG to offset vehicle fuel (through injection into the pipeline) is expected to fully offset GHG emissions.

4.6.3 Capital and Life Cycle Costs

This section summarizes the capital and life cycle costs that were developed for Pathway 2. The business case evaluation includes project and life-cycle costs to implement, operate, and maintain the biogas upgrading system.

4.6.3.1 Capital Costs

The total project cost estimate calculated in 2025 dollars for Pathway 2 is $25,572,000, as shown in Table 4.16. A detailed project cost estimate is provided in Appendix 4A. This cost includes a biogas upgrading system located in a building, related sitework and its enclosure, a gas chromatograph, and various allowances for structural, mechanical, and electrical, instrumentation, and controls. Vendor cost proposals are provided in Appendix 4B.

Table 4.16 Pathway 2 (RNG) Estimated Project Cost

Description		Cost
Direct Costs (includes construction allowances)		$12,795,000
General Conditions Allowance	15%	$1,919,000
Contractor Overhead and Profit	20%	$2,559,000
Bonds and Insurance	3%	$384,000
Total Construction Cost		$17,657,000
Engineering Legal, and Administrative Fees	15%	$2,649,000
Construction Management	10%	$1,766,000
MG&E Interconnect Facility		$3,500,000
Total Project Cost Estimate (2025 dollars)		$25,572,000

4.6.3.2 Annual Operations and Maintenance Costs and Revenues

Pathway 2 O&M costs include the following:

- Natural gas for digester heat.
- Natural gas for steam heat.
- Biogas upgrading system O&M.
- Media replacement costs.

- Electricity cost.
- Annual reporting fees and certification.

In Pathway 2, all biogas will be routed to the biogas upgrading system and natural gas will be used in the boilers for digester heating, resulting in significantly more natural gas purchased compared to Pathway 1.

O&M costs for the biogas upgrading system include a variety of tasks performed by MMSD staff. Required activities include:

- Replacement of consumables (e.g., air filters, coolant, etc.).
- Maintenance of major mechanical components:
  - Chiller refrigerant replacement.
  - Compressor oil changes and bearing replacement.
  - Heat exchanger flushing.
- Instrument calibration and maintenance.

The annual O&M cost is estimated to be 2 percent of equipment costs.

The other major operational cost is replacement of the media used for H_2S, VOC, and siloxane removal. The annual cost media replacement was provided by Unison based on MMSD's raw biogas quality.

Electricity costs are included in Pathway 2 based on the anticipated electrical load from the compressors and ancillary equipment. The compressors were assumed to operate at an average of 190 psig throughout the year.

The annual reporting fee pays for a third-party carbon broker to manage the sale of RNG and the associated environmental credits.

Annual revenues for Pathway 2 include RIN revenue through the RFS program and sale of the brown gas. RIN revenues are based on the average price for the last ten years to capture the changes in market value. Brown gas revenues were calculated based on the wholesale price of the gas, minus fees for brokerage of sales and transportation costs through the natural gas utility-owned pipelines.

4.6.3.3 Net Present Value

Carollo developed the NPV for Pathway 2 over the projected life of the equipment, assumed to be 20 years, using the projected capital cost, O&M costs, and anticipated revenues. Life cycle cost is expressed in an NPV showing the value of the overall project in 2028 dollars. Additionally, a simple payback period shows when the net revenues from the project will exceed the initial capital cost. Methodology of the analysis is summarized in section 4.3.

A summary table presenting the NPV is shown in Table 4.17. The detailed NPV calculations for this alternative are included in Appendix 4C.

Table 4.17 Pathway 2 (RNG) Net Present Value

Criteria	Costs/(Revenues)
Estimated Project Capital Cost (escalated to 2028 dollars)	$28,352,000
Annual Costs	$1,924,000
Natural Gas Cost for hot water heat, $/year	$561,000
Natural Gas Cost for steam heat, $/year	$272,000
Annual System Operation, $/year	$101,000
Media Replacement Cost, $/year	$397,000
Electricity Cost, $/year	$469,000
Annual Reporting Fees and Certification, $/year	$124,000
Annual Revenues	($6,419,000)
Natural Gas Sale to Pipeline, $/year	($254,000)
D3 (Cellulosic) RIN Revenue, $/year(1)	($6,165,000)
Net Annual Costs/(Revenues), $/year	($4,495,000)
Net Present Value	($59,458,000)
Payback Period, years	6 years

Notes:
(1) Revenues are based on average D3 RIN value of $2.20/RIN and brokerage fees of 15% of RIN revenues.

This alternative has a 20-year NPV of $59.5 million and translates to a payback of approximately 6 years.

Consistent with the approach used in Pathway 1, NPV was evaluated for two separate scenarios under Pathway 2 to account for varying biogas conditions:

1. FOG Digestion: For this analysis, biogas production was increased by 144,000 cfd (100 scfm) and the payback was reduced to 5 years with a 20-year NPV of $76 million.
2. Thermophilic Digestion: For this analysis, the biogas production was increased by 10 percent, and the hot water heat demand was increased by 40 percent. The payback for this scenario stays the same as 6 years with a 20-year NPV of $67 million.

Sensitivity Evaluations

To evaluate the financial viability based on changing future conditions, sensitivity analyses were developed for Pathway 2. The following scenario was considered:

1. Scenario 1: Sale of RNG on the voluntary market. Voluntary market pricing has historically ranged from $10 to $20 per MMBtu (as compared to over $28/MMBtu for D3 RINs) and can be a more stable form of revenue due to the ability to lock in a fixed rate over a contract term. The payback for Pathway 2 assuming voluntary market revenue of $15/MMBtu in lieu of RIN revenue was calculated to be 15 years with an NPV of $9 million.
2. Scenario 2: Increased electrical cost. Cost of electricity was increased by 10 percent for this evaluation. The payback for this scenario stays the same at 6 years with an NPV of $58.5 million.
3. Scenario 3: Increased Natural Gas cost. Cost of natural gas was increased by 10 percent for this evaluation. The payback for this scenario stays the same at 6 years with an NPV of $58 million.

4. Scenario 4: Reduced gas conditioning media replacement cost: Based on feedback from MMSD on current media replacement costs, this scenario incorporates a reduced media replacement cost of $100k/year. The payback for this scenario stayed the same at 6 years with a 20-year NPV of $65 million.

These scenarios are presented graphically as compared to the baseline for Pathway 2 in Figure 4.19.

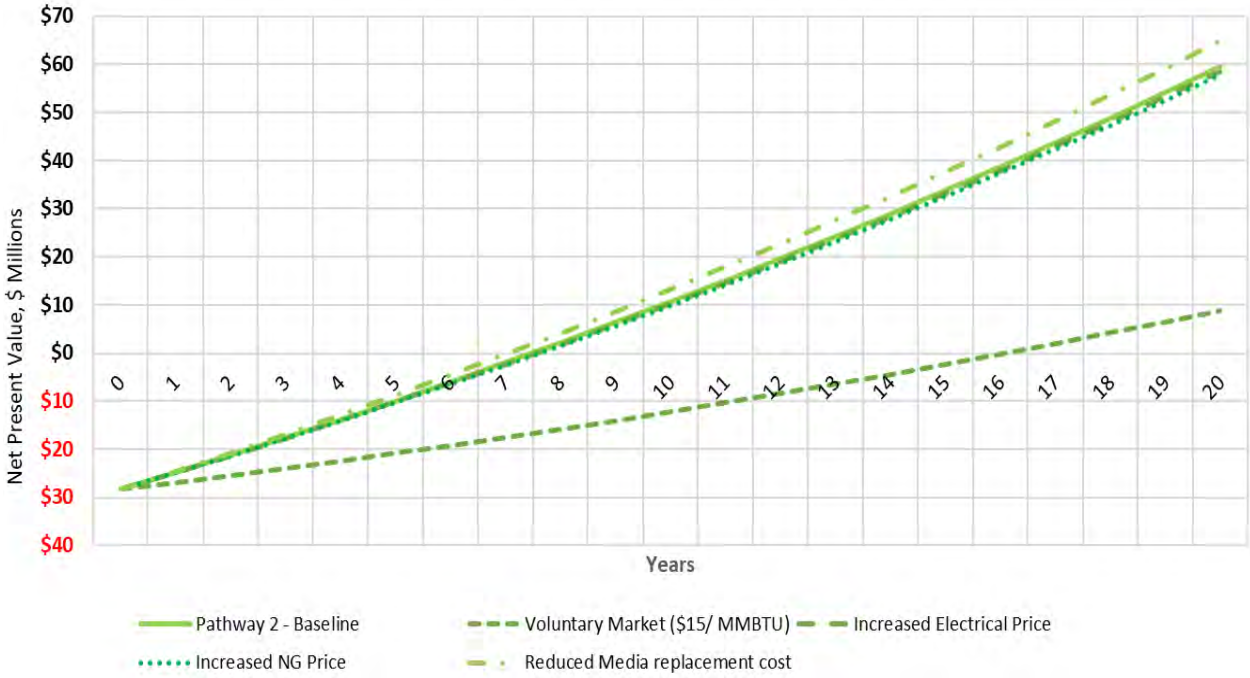

Figure 4.19 Sensitivity Analysis for Pathway 2 (RNG)

4.7 Decision Criteria

This section discusses each alternative with respect to the decision criteria established in TM 1.

4.7.1 Financial considerations

Pathway 1 requires a similar capital cost investment as compared to Pathway 2. However, Pathway 2 is estimated to have a shorter payback period and a higher 20-year NPV due to the higher revenue potential of the RFS program. Table 4.18 compares the project costs for each pathway and Table 4.19 compares the annual costs and NPV of each pathway.

Table 4.18 Estimated Project Cost Comparison

Description	Null Pathway	Pathway 1 (Cogen)	Pathway 2 (RNG)
Direct Costs (includes construction allowances)	$400,000	$15,428,000	$12,795,000
General Conditions Allowance	$60,000	$2,314,000	$1,919,000
Contractor Overhead and Profit	$80,000	$3,086,000	$2,559,000
Bonds and Insurance	$12,000	$463,000	$384,000
Total Construction Cost	$552,000	$21,291,000	$17,657,000
Engineering, Legal, and Administrative Fees	N/A	$3,194,000	$2,649,000
Construction Management	N/A	$2,129,000	$1,766,000
MG&E Interconnect Facility	N/A	N/A	$3,500,000
Total Project Cost Estimate	$552,000	$26,614,000	$25,572,000

Table 4.19 Estimated Net Present Value Comparison

Criteria	Null Pathway Costs/(Revenues)	Pathway 1 (Cogen) Costs/(Revenues)	Pathway 2 (RNG) Costs/(Revenues)
Estimated Project Capital Cost (2028 dollars)	$612,000	$29,507,000	$28,352,000
Annual Costs	$674,000	$1,152,000	$1,924,000
Annual Revenues	($1,090,000)	($3,370,000)	($6,419,000)
Net Annual Costs/(Revenues), $/year	($416,000)	($2,218,000)	($4,495,000)
Net Present Value	($7,627,000)	($14,266,000)	($59,458,000)
Payback Period, years	N/A	13 years	6 years

Based on the sensitivity evaluations, the payback for Pathway 1 ranges from 11 to 14 years (not including ISCC revenues which are assumed to be not viable), while the payback for Pathway 2 ranges from 6 to 15 years.

4.7.2 Operations and Maintenance

4.7.2.1 Pathway 1

For Pathway 1, most, if not all, of the equipment should be familiar to MMSD staff due to the existing engines and biogas conditioning equipment. The proposed engines will run a leaner fuel to air ratio (more air per fuel component) compared to the existing engines, improving performance and reducing emissions. The higher brake-specific fuel consumption of the newer turbocharged engines allows for more electrical power to be produced from the available biogas.

Cogeneration systems consist of several pieces of mechanical equipment and controls that work together to produce power and electricity for the plant. Proper system operation requires an understanding of individual components, how the systems interact together, and system controls. Regular maintenance of the engine and associated equipment and gas conditioning system will increase reliability and reduce unexpected issues, improving engine up time, leading to an improved experience for plant staff and more power production and heat from the engines.

The gas conditioning system proposed for Pathway 1 is similar to the existing equipment, albeit with an increased capacity to match the new, larger cogeneration engines. Treatment to remove moisture, H_2S, and siloxanes is very similar to the existing equipment, and the proposed blower system operates at a similar pressure. Media changeout frequency may differ due to different biogas flow rates, and new changeout schedules will need to be established.

Cogeneration systems at WRRFs are well-proven, going back many decades, and reliable if maintenance is performed regularly and the gas quality meets the engine manufacturer's requirements. The media-based treatment to remove H_2S, VOCs, moisture, and siloxanes is also a reliable and proven resilient design that is key to longevity of the engines. If these contaminants are not removed upstream, particularly siloxanes, silicon dioxide will build up in the combustion chamber and destroy pistons and valves, leading to significant repair costs and unplanned engine downtime.

The engine controls constantly monitor many parameters and will adjust engine speed, output, air-fuel ratio, and other parameters to control electrical output based on available gas production. If an issue occurs, the controls will signal an alarm so operators can respond to and address the issue. Manufacturers offer connected services so they can see the alarms also and can offer assistance to MMSD staff to troubleshoot an issue.

If an engine is shutdown, the boilers will receive additional digester gas to maintain the plant heat loop temperature to offset the heat lost from an engine being offline. If the boilers do not need as much digester gas as what is being produced, the existing back pressure regulator valve serving the waste gas burner will sense an increase in biogas header pressure, causing the waste gas burner to safely combust the excess biogas.

4.7.2.2 Pathway 2

Biogas upgrading systems are made up of combinations of multiple subsystems that work together to produce pipeline quality gas. Proper operation of the system requires an understanding of both individual components, overall system, and control philosophy. Maintenance of the equipment and attention to process parameters will increase reliability and reduce unexpected issues.

Individual components are relatively straightforward and some are familiar to MMSD staff due to the current biogas conditioning equipment. Treatment to remove moisture, H_2S, and siloxanes are very similar to the existing equipment, The membranes themselves are one of the more simple components, and generally require limited maintenance. Flow is controlled by actuated valves at each membrane inlet.

The underlying technology for the overall system and individual components is well-proven and reliable, as long as maintenance is performed regularly. The media-based treatment to remove H_2S, VOCs, and siloxanes is a reliable, resilient design that is key to longevity of the membranes. If these contaminants are not removed upstream, the membranes can be irreparably fouled and need replacement. Carollo is not aware of any facilities that have fouled their membranes, due to a combination of robust design and relatively conservative media changeout timing.

The biogas upgrading system constantly monitors many parameters and will adjust compressor VFD speed, internal recycle rates, and other parameters to control temperature, RNG quality, and flow rate. If the system programming cannot produce RNG that meets the required specification, it will go into a controlled shutdown. Operators will receive alarms that indicate the reason for the shutdown and may

have to work on the system. If the system is shutdown, the existing biogas flare will sense an increase in biogas header pressure and perform its ignition sequence and then combust the biogas.

4.7.3 Implementation

4.7.3.1 Pathway 1

The cogeneration building shown on the site plans above will fit on the existing site and integrate with the existing biogas, heat loop, and electrical infrastructure nearby, and does not restrict future site development beyond the immediate building and gas conditioning equipment footprint. Additionally, by utilizing a different area than the existing cogeneration engines, the new equipment can be constructed offline, minimizing time without cogeneration operation. Once the new systems are tested and operational, the existing cogeneration systems and gas conditioning can be demolished and salvaged as desired by MMSD.

Utility piping such as digester gas, hot water piping, electrical conduits, and other required utilities will be installed below grade across the site, which will not impact future site flexibility.

4.7.3.2 Pathway 2

Similar to Pathway 1, the site plans shown above fit on the existing site, integrate with the existing biogas infrastructure, do not restrict future site development, and can be constructed offline.

RNG and off-specification RNG piping will be installed below grade across the site, which will not impact future site flexibility, but will impact traffic on the roads during construction.

4.7.4 Other

4.7.4.1 Pathway 1

Market Risk: There is no market risk with baseline Pathway 1 cogeneration operations due to a continuous demand for power at the plant. Additionally, the existing engine blower is planned to be replaced with an electric driven blower, further increasing on-site electricity demand.

Energy Recovery: Pathway 1 provides on-site energy recovery of electricity and natural gas, offsetting around 60 percent of the plant's electricity demand and approximately half of the thermal demand. As noted above, cogeneration heat cannot be used to offset acid phase digester heat requirements since those are met by steam boilers.

The cogeneration system is capable of 42 percent electrical and 40 to 45 percent thermal efficiency with a combined efficiency of approximately 85 percent.

Outside Dependence: Pathway 1's dependence on outside providers consists of dependence on consumables (e.g., oil, coolant, spark plugs, etc.), of which there is very little or no risk of not being able to purchase consumables well into the future. There is also outside dependence for maintenance and service of the equipment, and the supply of new components required to rebuild the engines (e.g., major components such as blocks, crankshafts, etc.). Servicing and components are discussed further below.

Service and maintenance: If the plant does not have staff trained to perform maintenance services, MMSD will be reliant on engine service providers to perform routine maintenance, as well as more advanced services such as major overhauls and repair of unforeseen conditions. Again, similarly to consumables, all the major engine manufacturers have long established certified service providers providing little evidence of risk that they would not be available for the duration of the equipment life. Additionally, there are significant population centers close by such as Chicago, Milwaukee, and other Midwest cities such as St. Paul/Minneapolis, within a few hundred miles, reducing the risk that service would not be possible if it was ever not local to Madison.

Engine component supply and replacement: As previously described, even the existing Waukesha engines are expected to be supplied with new major components such as engine blocks, crankshafts, heads, etc., for the foreseeable future (at least 20 years according to Waukesha). There is minimal risk of any new lean burn engine being installed of not being able to be rebuilt well past the expected useful life. All new engines installed as part of Pathway 1 would be a current generation piece of equipment that has long established manufacturing and installations around the world.

4.7.4.2 Pathway 2

Market Risk: The markets for RNG are well-established, though not guaranteed. The RFS goes back to 2005, with updates in 2007 and additional legislation in 2022 and 2024, as well as future planned modifications. It has broad political and geographical support, as it incentivizes production of ethanol and RNG, as well as other alternative fuels. Although new legislation could reduce the value of RINs or eliminate the program entirely, there haven't been any indicators that this is likely.

The voluntary market is another alternative for the sale of RNG that can provide additional security in the form of long-term agreements with large companies. Instead of selling RINs on an open market, MMSD would partner with a company that is interested in reducing its environmental footprint, and that entity would pay MMSD for the RNG. The value of the voluntary market contracts are less than selling D3 RINs but do provide additional security.

Energy Recovery: The energy recovery of the biogas upgrading system is a combination of the proportion of methane captured by the process and the uptime of the equipment. The proposed membrane biogas upgrading system captures 99.5 percent of the incoming methane content of the biogas. The analysis assumes an uptime of 95 percent for the system, due to maintenance of the system including replacement of the H_2S and VOC/siloxane removal media, compressor oil changes, and other required work. Overall, the energy recovery of the process is very high.

Outside Dependence: Biogas upgrading requires dependence on outside energy sources including electricity to power the equipment and natural gas for process and building heat demands. Additionally, the biogas upgrading system is designed without significant redundancy, meaning there are single unit processes within the overall system that can shut the entire system down. This risk can be mitigated by storing spare parts on-site for rapid replacement as well as coordinating with equipment manufacturers for overnight shipping of equipment when required.

4.8 Recommendations

This section compares Pathways 1 and 2 based on the decision criteria outlined in section 4.3. A comparison of the 20-year NPVs of the null pathway, Pathway 1, and Pathway 2 is presented in Figure 4.20. Pathway 2 (RNG) steadily increases through the years with the project costs recovering in about 6 years and reaching a 20-year NPV (i.e. revenue) of nearly $60 million. This indicates that long-term operation significantly increases revenue generation. In comparison, Pathway 1 (Cogeneration) requires around 13 years to recover project costs and achieves a 20-year NPV of $15 million.

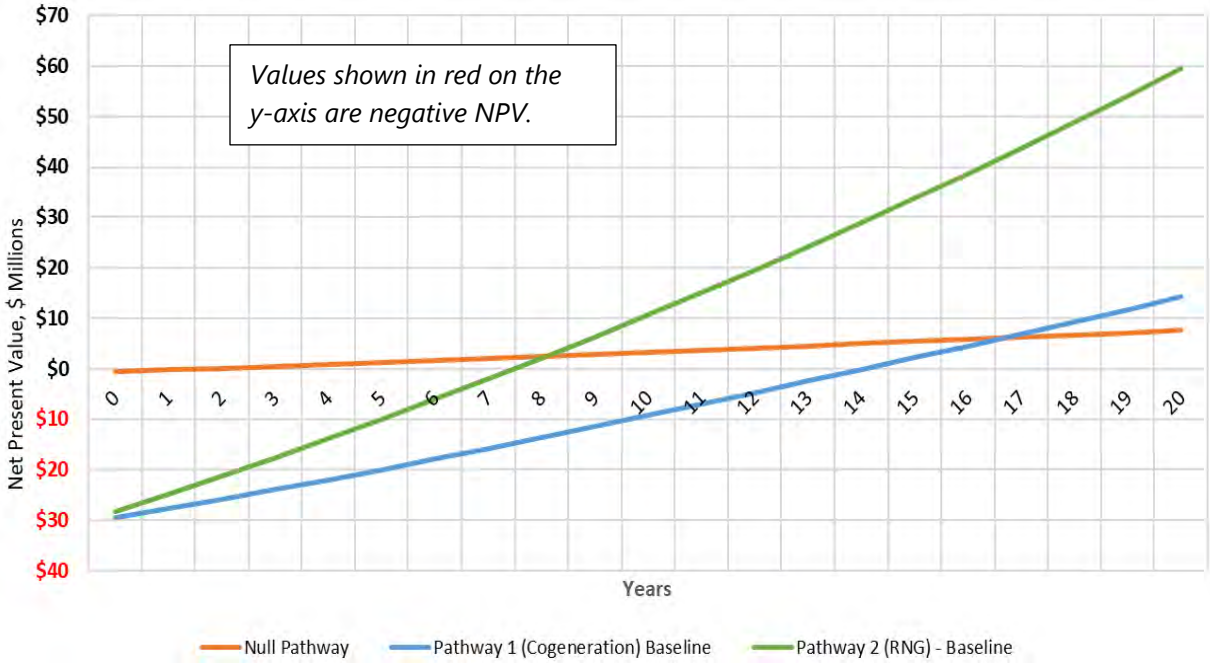

Figure 4.20 Comparison of Net Present Values

Table 4.20 presents a high-level summary of how each pathway meets the criteria and Table 4.21 provides quantitative scoring using the weighting agreed upon in Workshop 0/1 and documented in TM 1. Scores for each category range from 1 to 5, with higher values being more favorable.

Table 4.20 Review of Pathways 1 and 2 Based on Decision Criteria

Category	Criteria	Pathway 1 (Cogen)	Pathway 2 (RNG)
Financial	Capital Costs	Similar capital cost to Pathway 2.	Similar capital cost to Pathway 1.
	Life Cycle Costs	Positive revenue is realized after approximately 13 years of operation. Overall, 20-year revenue is lower than Pathway 2 but has a positive NPV of approximately $14 million. Based on the sensitivity evaluations, the payback for Pathway 1 ranges from 11 to 14 years.	Higher revenue projection over 20 years, with estimated payback of 6 years and 20-year NPV of approximately $59.5 million. Based on the sensitivity evaluations, the payback for Pathway 2 ranges from 6 to 15 years.
O&M	Operational Complexity/Difficulty	MMSD is familiar with gas conditioning equipment and cogeneration engines. However, Pathway 1 has more operational complexity as compared to a biogas upgrading system.	MMSD is unfamiliar with overall system, however individual components are similar to existing gas conditioning system and membranes do not require significant operator attention.
	Operational Response/Risk/Uptime	Reliable technologies in gas conditioning and CHP engines. Downtime required for media replacement. Proper maintenance and on-site spare parts storage required to maintain uptime. Requires operator attention when errors occur.	Treatment is proven and is anticipated to meet MG&E requirements consistently. Downtime required for media replacement. Complex system comprised of multiple sub-systems with extensive instruments and controls. With proper maintenance and on-site spare parts storage, uptime of 95% is possible. Requires operator attention when errors occur.
Implementation	Future Site Flexibility	Proposed locations do not impact MMSD's future expansion of process-related or other infrastructure.	Proposed locations do not impact MMSD's future expansion of process-related or other infrastructure.
Other	Market Risk	Minimal market risk as baseline Pathway 1 revenue is based on offset of electricity costs.	Financial feasibility is based on EPA's RFS program, which has been resilient to changes in political administrations to this point and has broad support. However, this program is not guaranteed, and RIN values have experienced significant fluctuations historically. Voluntary market can provide additional security with long-term contracts.
	Energy Recovery	Capable of 42 percent electrical and 40 to 45 percent thermal efficiency; combined efficiency of approximately 85 percent.	Capable of 99.5% methane recovery.
	Outside Dependence	Provides 60 percent of electricity utilized on-site and 50 percent of heat required for process and building needs.	Requires outside partnerships for pipeline injection and external energy for process heat, supplied by natural gas. Cannot produce electricity to be used on site.

Table 4.21 Quantitative Scoring of Decision Criteria

Category	Criteria	Weight	Pathway 1 (Cogen)	Pathway 2 (RNG)
Financial	Capital Costs (2025$)	14%	3	3
	Life Cycle Costs	20%	3	5
O&M	Operational Complexity/Difficulty	14%	3	3
	Operational Response/Risk/Uptime	9%	3	3
Implementation	Future Site Flexibility	9%	3	3
Other	Market Risk	12%	4	2
	Energy Recovery	10%	4	5
	Outside Dependence	12%	5	1
		Total Weighted Average	3.46	3.24

Based on the evaluation completed herein and a review of each pathway against the decision criteria defined in TM 1, both pathways are feasible and will meet MMSD's goals. Pathway (cogeneration) 1 has a weighted average score of 3.46, compared with 3.24 for Pathway 2 (RNG). Pathway 1 scored better in both market risk and outside dependence, while Pathway 2 scored higher in life cycle costs. While Pathway 1 has a slightly higher weighted score, it should be noted that cogeneration systems have not been frequently installed at WRRFs in the last 5 to 7 years due to their higher O&M requirements and lower revenue potential as compared to RNG. Pathway 2 is recommended for implementation at MMSD due to its relatively straightforward operation and strong 20-year revenue potential.

APPENDIX 4A

PROJECT COST ESTIMATES

Madison Metropolitan Sewerage District

carollo
Engineers...Working Wonders With Water®

PROJECT :	MMSD Heat and Power Improvements	**ESTIMATE CLASS:**	4
CLIENT:	Madison Metropolitan Sewerage District	**PREPARED BY:**	AS
JOB # :	203259	**DATE PREPARED:**	06-May-25
FACILITY:	Null Pathway	**REVIEWED BY:**	DB
		DATE:	09-May-25

ITEM	DESCRIPTION	QTY	UNIT	UNIT COST	TOTAL
SUMMARY OF CONSTRUCTION COSTS					
Equipment					
	Controls Replacement	1	LS	$ 175,000	$ 175,000
	Chiller Replacement	1	LS	$ 100,000	$ 100,000
	Blower Replacement	1	LS	$ 100,000	$ 100,000
				SUBTOTAL EQUIPMENT AND DIRECT COSTS	$ 375,000
	ALLOWANCE FOR CONSTRUCTION SERVICES				
	Start-up and Commissioning Allowance	1	LS	$ 25,000	$ 25,000
				SUBTOTAL DIRECT COSTS	**$ 400,000**
	CONTRACTOR MARKUPS, TAXES, AND ESCALATION				
	General Conditions	15%			$ 60,000
	Contractor Overhead and Profit	20%			$ 80,000
	Bonds and Insurance	3%			$ 12,000
				TOTAL CONSTRUCTION COST	**$ 552,000**
				TOTAL PROJECT COST ESTIMATE =	**$ 552,000**

Madison Metropolitan Sewerage District

carollo

PROJECT :	MMSD Heat and Power Improvements	**ESTIMATE CLASS:**	4
CLIENT:	Madison Metropolitan Sewerage District	**PREPARED BY:**	AS
JOB # :	203259	**DATE PREPARED:**	06-May-25
FACILITY:	Pathway 1: Upgraded Cogeneration Facility	**REVIEWED BY:**	BJL
		DATE:	09-May-25

ITEM	DESCRIPTION	QTY	UNIT	UNIT COST	TOTAL
SUMMARY OF CONSTRUCTION COSTS					
Structures - Cogeneration Building					
	Sitework	1	LS	$250,000	$ 250,000
	Gas upgrading concrete pad, 25 ft x 60 ft	111	CY	$1,000.00	$ 111,000
	Cogen Building Foundation, 110 ft x 60 ft	489	CY	$1,000	$ 489,000
	Cogen Building Precast Walls	1	LS	$1,155,000	$ 1,155,000
	Cogen Building Roof	6,600	SF	$60	$ 396,000
				COGENERATION BUILDING SUBTOTAL	$ 2,401,000
Equipment					
	Hydrogen Sulfide Removal System	1	LS	$ 550,000	$ 660,000
	Gas Blower/Moisture Removal System	1	LS	$ 825,000	$ 990,000
	Siloxane Removal System	1	LS	$ 350,000	$ 420,000
	Cogen Engines	2	EA	$ 1,115,000	$ 2,676,000
	Hot Water Pumps	2	EA	$ 35,000	$ 84,000
Salvage					
	Scrap value of existing engine	3	EA	$ (50,000)	$ (150,000)
				SUBTOTAL EQUIPMENT AND SALVAGE COSTS	$ 4,680,000
				SUBTOTAL EQUIPMENT, SALVAGE AND ITEMIZED DIRECT COSTS	**$ 7,081,000**
	ALLOWANCE FOR CONSTRUCTION SERVICES				
	Structural/Architectural Allowance	3%	%		$ 212,000
	Mechanical System Allowance (HVAC, Plumbing)	7.5%	%		$ 531,000
	Electrical, I&C, Programming allowance	25%	%		$ 1,770,000
	Piping/Valve allowance	30%	%		$ 2,124,000
	Start-up and Commissioning Allowance	1	LS	$ 150,000	$ 150,000
				SUBTOTAL	**$ 11,868,000**
	Construction Contingency	30%	%		$ 3,560,400
				SUBTOTAL DIRECT COSTS	**$ 15,428,000**
	CONTRACTOR MARKUPS, TAXES, AND ESCALATION				
	General Conditions Allowance	15%			$ 2,314,000
	Contractor Overhead and Profit	20%			$ 3,086,000
	Bonds and Insurance	3%			$ 463,000
				TOTAL CONSTRUCTION COST	**$ 21,291,000**
TOTAL PROJECT COST ALLOWANCES (NON-CONSTRUCTION)					
	Engineering, Legal, and Administrative fees	15%			$ 3,194,000
	Construction Management	10%			$ 2,129,000
				TOTAL PROJECT COST ESTIMATE =	**$ 26,614,000**

Madison Metropolitan Sewerage District

carollo

		ESTIMATE CLASS:	4
PROJECT :	MMSD Heat and Power Improvements	**PREPARED BY:**	AS
CLIENT:	Madison Metropolitan Sewerage District	**DATE PREPARED:**	06-May-25
JOB # :	203259	**REVIEWED BY:**	BJL
FACILITY:	Pathway 2: Biogas Upgrading	**DATE:**	09-May-25

ITEM	DESCRIPTION	QTY	UNIT	UNIT COST	TOTAL
SUMMARY OF CONSTRUCTION COSTS					
Civil/Structure					
	Sitework	1	LS	$ 250,000	$ 250,000
	Gas upgrading concrete pad, 25 ft x 50 ft	93	CY	$ 1,000	$ 93,000
	RNG Building Foundation, 50 ft x 50 ft	185	CY	$ 1,000	$ 185,000
	RNG Building Precast Walls	1	LS	$ 500,000	$ 500,000
	RNG Building Roof	2,500	SF	$ 60	$ 150,000
Equipment					
	H2S Reduction System	1	EA	$ 550,000	$ 660,000
	Siloxane removal system	1	EA	$ 350,000	$ 420,000
	Gas Upgrading System	1	EA	$ 3,060,000	$ 3,672,000
	Gas Chromatograph	1	EA	$ 100,000	$ 120,000
	SUBTOTAL EQUIPMENT AND ITEMIZED DIRECT COSTS				**$ 6,050,000**
	ALLOWANCE FOR CONSTRUCTION SERVICES				
	Structural/Architectural Allowance	3%			$ 182,000
	Mechanical System Allowance (HVAC, Plumbing, etc.)	3%			$ 182,000
	Electrical, I&C, Programming allowance	25%			$ 1,513,000
	Piping/Valve Allowance	30%			$ 1,815,000
	Start-up and Commissioning Allowance	1	LS	$ 100,000	$ 100,000
				Subtotal	**$ 9,842,000**
	Construction Contingency	30%			$ 2,953,000
	SUBTOTAL DIRECT COSTS				**$ 12,795,000**
	CONTRACTOR MARKUPS, TAXES, AND ESCALATION				
	General Conditions Allowance	15%			$ 1,919,000
	Contractor Overhead and Profit	20%			$ 2,559,000
	Bonds and insurance	3%			$ 384,000
	TOTAL CONSTRUCTION COST				**$ 17,657,000**
TOTAL PROJECT COST ALLOWANCES (NON-CONSTRUCTION)					
	Engineering, Legal and Administrative fees	15%			$ 2,649,000
	Construction Management	10%			$ 1,766,000
	MGE Interconnect Facility	1	LS	$ 3,500,000	$ 3,500,000
	TOTAL PROJECT COST ESTIMATE =				**$ 25,572,000**

APPENDIX 4B

VENDOR PROPOSALS

BUDGET MEMO
GAS CONDITIONING SYSTEM

Date: 3/20/2025
Expires: Budgetary

Tyler Dougherty
Carollo Engineering

Memo Number: PX-424-4275.3
Project Name: MMSD Gas Conditioning System

Unison Solutions, Inc., is pleased to provide this **BUDGET** memo for a Gas Conditioning System for the MMSD Project. This memo includes all the CAD design services, technician labor, fabrication, and materials to construct a Gas Conditioning System.

Thank you for giving Unison Solutions the opportunity to provide you with the enclosed proposal. If you have questions or require additional information, please contact me at your convenience.

Sincerely,

Curt Schiesl
Unison Solutions, Inc.
Phone: (563)-227-4154
Cell: (563)-239-4317
Curt.Schiesl@unisonsolutions.com

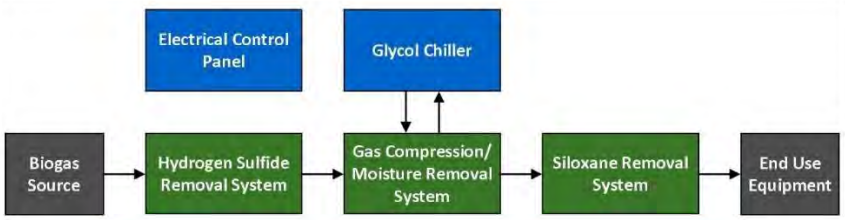

Equipment	Mounting	Electrical Classification
Hydrogen Sulfide Removal System	Standalone	Class I, Division 1
Gas Compression/Moisture Removal System	Skid Mounted	Class I, Division 1
Siloxane Removal System	Standalone	Class I, Division 1
Glycol Chiller	Standalone	Unclassified
Electrical Control Panel	Standalone	Unclassified

DESIGN CONDITIONS

Design Conditions	
Minimum ambient temperature (°F) [1]	40
Maximum ambient temperature (°F)	100
Site elevation ('AMSL)	<1,000
Minimum gas flow (scfm)	0
Maximum gas flow (scfm)	740
Gas inlet pressure ("WC)	4-8
Biogas inlet temperature (°F)	100
Relative humidity (%)	70-100
Methane - CH_4 (vol %)	63
Carbon Dioxide - CO_2 (vol %)	36.3
Nitrogen - N_2 (vol %)	≤0.5
Oxygen - O_2 (vol %)	≤0.2
Hydrogen sulfide - H_2S (ppmv)	400
Siloxanes[2] (L2, L3, L4, L5, D3, D4, D5, D6)(ppbv)	See samples
Volatile Organic Compounds (VOCs)(ppbv)[2]	See samples

1. *Freeze protection not included.*
2. ***Gas data based on two similar wwtp gas samples***

Discharge Gas Conditions	
Biogas discharge pressure (psig)	5
Biogas discharge temperature (°F)	80
Dew point temperature (°F)	40
Hydrogen sulfide - H_2S (ppmv)	≤10
Siloxanes (ppbv)	<100

Design and content included in this document is proprietary and remains the property of Unison Solutions, Inc.

EQUIPMENT/SUB-SYSTEMS

HYDROGEN SULFIDE REMOVAL SYSTEM

- (2) 10'Øx16'SS 316SS Hydrogen Sulfide Removal Media Vessels
- 316SS Lead Lag Piping
- Work Platform and Ladder
- Initial Charge of H_2S Removal Media

GAS COMPRESSION/MOISTURE REMOVAL SYSTEM

- Gas Blower Inlet Moisture/Particulate Filter
- Gas Blower
- Dual Core Heat Exchanger
- Gas Recirculation
- Skid Base

GLYCOL CHILLER

- Glycol Chiller
- Initial fill of Propylene Glycol/Water Mixture

SILOXANE/VOC REMOVAL SYSTEM

- (2) 84'Øx12'SS 316SS Siloxane/VOC Removal Media Vessels
- 316SS Series Piping
- Work Platform and Ladder
- Initial charge of Media
- Final Particulate Filter

CONTROL SYSTEM

- System Control Panel

TEMPERATURE CONTROLLED ENCLOSURE

- Steel Exterior
- Ventilation Fan and Intake Louvers
- Heater
- LED Light Fixtures
- LEL Combustible Gas Sensor

Design and content included in this document is proprietary and remains the property of Unison Solutions, Inc.

SITE REQUIREMENTS

ELECTRICAL CLASSIFICATION

- NEC Class I, Division 1 Group D Areas

    - Hydrogen Sulfide Removal System
    - Gas Blower/Moisture Removal System
    - Siloxane Removal System

- Unclassified Electrical Areas

    - Glycol Chiller
    - Gas Conditioning System Control Panel

EQUIPMENT MOUNTING

- Skid Mounted

    - Gas Blower/Moisture Removal System

- Standalone

    - Hydrogen Sulfide Removal System
    - Glycol Chiller
    - Siloxane Removal System
    - Gas Conditioning System Control Panel

Design and content included in this document is proprietary and remains the property of Unison Solutions, Inc.

MAINTENANCE

Gas Conditioning System Maintenance	
H_2S Removal Media	UNI-H2S; Pelletized Iron Hydroxide
H_2S Removal Vessel	(2) 10'Ø x 16' Straight Side 316SS
Media per Vessel	37,400lbs
Replacement Media & Pad Cost per	$63,000.00
H2S Concentration	250ppmv
Estimated Media Life per Vessel[3]	150 days
Siloxane Removal Media	UNI-XXXX – Activated Carbon
Siloxane Removal Vessel	(2) 84"Ø x 12' Straight Side 316SS
Media per Vessel	12,100lbs [24,200lbs/system]
Media Cost (system)[1]	$150,000.00
Estimated Media Life[3]	Based on Fond du Lac: 262 days
	Based on South Platte: 511 days
Skid Maintenance[4]	$3,500.00/yr

1. *Does not include shipping, labor, or disposal of new/spent media*
2. *Clean Inlet M/P Filter, replace blower oil/grease, clean chiller condenser, etc.*
3. *Speciated Siloxane/VOC Unavailable. Media life to be determined at a later date.*

Estimated Electrical Parasitic *(480V/3Ø/60Hz)*					
	Installed		Calculated Run Load		
	Motor	FLA[2]	BHP[3]	RLA[4]	Calculated kW[5]
Gas Blower	30		27.4		20.4
Condensate Pump	0.5		0.4		0.3
Glycol Chiller		68		54.4	42.2
Controls & Aux		6.2		5	4.1
				Run Load kW[5]	70

1. *Installed Motor Horsepower Nameplate*
2. *Full Load Amps from non-motor loads*
3. *Brake Horsepower*
4. *Run Load Amps; calculated at approximately 80% of FLA*

Enclosure Electrical Parasitic			
	HP	Amps	Calculated kW
Heater			10
Exhaust Fan	1/2		0.3

1. *Enclosure electrical loads run intermittently as needed*

Design and content included in this document is proprietary and remains the property of Unison Solutions, Inc.

DELIVERY SCHEDULE

- Equipment delivery is subject to confirmation at the time of order placement and/or submittal approval

PRICING SUMMARY

- Price includes all labor and expenses associated with the fabrication of the system.
- Prices do not reflect any taxes that may be applicable.
- Price is FCA; Factory, Dubuque, IA 52002, per Incoterms 2010. Shipping costs not included.
- Price does not include Start-up and Commissioning. Costs are shown below
- Prices are in US Dollars
- Media Escalation: Media pricing is directly influenced by US imposed tariffs. Unison may adjust pricing for the media provided should there be future tariffs assigned to this product.

Biogas Conditioning System	
Hydrogen Sulfide Removal System	$550,000.00
Gas Blower/Moisture Removal System	$825,000.00
Siloxane Removal System	$350,000.00
Temperature Controlled Enclosure	$150,000.00
Start-Up & Commissioning **ESTIMATE**	$20,000.00
Total	**$1,895,000.00**

PRICE DOES NOT INCLUDE

- Shipping of equipment to jobsite
- Any maintenance work after start-up
- H2S or siloxane removal media after initial fill
- Performance guarantee or service/maintenance contract
- Any gas testing or analyses
- Bonds of any kind
- Liquidated & Actual Damages are the sole financial responsibility of purchasing contractor
- Permitting for the installation of the equipment or air permits
- Freeze protection; including insulation and/or heat trace and heat trace power
- Pipe stands for field piping
- Temperature Controlled Enclosure for Gas Blower/Moisture Removal System
- Anchor bolts
- Compliance with the American Iron & Steel Act, as Gas Conditioning equipment is exempt
- Equipment is constructed using both foreign and domestic materials and does not meet BABA requirements.

WARRANTY

- Unison Solutions, Inc. will warrant all workmanship and materials in conformance with the attached Warranty Statement. Warranty is valid for **18** months from the time the equipment is ready to ship from Unison's factory or **12** months from the date of startup, whichever occurs first.

Design and content included in this document is proprietary and remains the property of Unison Solutions, Inc.

UNISON

Unison Solutions, Inc. Standard Terms and Conditions of Sale

General – Unless otherwise expressly agreed in writing by a duly authorized representative of Unison Solutions, Inc. ("Unison") these terms and conditions supersede all other communications and agreements. Despite any conflicting or different terms and conditions in any order or acceptance of Purchaser, all sales and shipments shall exclusively be governed by these terms and conditions. "Products" as used herein shall include products, parts and services furnished to Purchaser by Unison.

Delivery – Unless otherwise agreed in writing, Products are delivered F.O.B. shipping point. Notwithstanding any agreement with respect to delivery terms or payment of transportation charges, the risk of loss or damage shall pass to Purchaser and delivery shall be deemed to be complete upon delivery to a private or common carrier or upon moving into storage, whichever occurs first, at the point of shipment for Products. Where the delivery of ready to ship Products is delayed by Purchaser, Unison may deliver such Products by moving them to storage for the account of and at the risk of Purchaser. Purchaser shall be responsible to pay Unison for said storage at a rate of $2 per square foot of space occupied by the Products or $50, per month, whichever is greater. Shipping dates are approximate and are based upon prompt receipt of all necessary information and approvals from Purchaser.

Payment – A service charge of the lesser of 1% per month or the highest rate permitted by applicable law shall be charged on all overdue accounts. Failure on the part of Purchaser to pay invoices when due shall, at the option of Unison, constitute a default in addition to all other remedies Unison may have under these conditions of sale or applicable law. If delivery is delayed by Purchaser, payment shall become due on the date Unison is prepared to make delivery.

Force Majeure – Unison shall not be liable for loss, damage, detention, or delay, nor be deemed to be in default from causes beyond its reasonable control or from fire, strike or other concerted action of workmen, act or omission of any governmental authority or of Purchaser, compliance with import or export regulations, insurrection or riot, embargo, delays or shortages in transportation, or inability to obtain necessary engineering talent, labor, materials, or manufacturing facilities from usual sources. In the event of delay due to any such cause, the date of delivery will be postponed by such length of time as may be reasonably necessary to compensate for the delay.

Warranty – Unison warrants to the Purchaser that all Products shall be free of defects in design, material and workmanship for a period of eighteen (18) months from the date the Products are ready to ship to Purchaser, or twelve (12) months from date of initial start-up, whichever occurs first, except as set forth below. Should any failure to conform with this warranty appear prior to or after shipment of the Product to Purchaser during the specified periods under normal and proper use and provided the Product has been properly stored, installed, handled and maintained by the Purchaser, Unison shall, if given prompt notice by Purchaser, repair or replace, the non-conforming Product or authorize repair or replacement by the Purchaser at Unison's expense. Unison warrants Products or parts thereof repaired or replaced pursuant to the above warranty under normal and proper use, storage, handling, installation, and maintenance, against defects in design, workmanship and material for a period of thirty (30) days from date of start-up of such repaired or replaced Products or parts thereof or the expiration of the original Product warranty, whichever is longer. The Unison warranty does not extend to Products not manufactured by Unison. The Unison warranty does not apply to defects in material provided by Purchaser or to design stipulated by Purchaser. If any nonconformity with this warranty appears within 45 days after the services are performed, the exclusive obligation of Unison shall be to re-perform the services in a conforming manner.

THE FOREGOING WARRANTIES ARE EXCLUSIVE AND IN LIEU OF ALL OTHER WARRANTIES OF QUALITY, WRITTEN, ORAL OR IMPLIED, AND ALL OTHER WARRANTIES, INCLUDING WITHOUT LIMITATION ANY WARRANTY OF MERCHANTABILITY OR FITNESS ARE HEREBY DISCLAIMED.

Limitation of Liability – IN NO EVENT SHALL UNISON BE LIABLE FOR SPECIAL, INDIRECT, INCIDENTAL OR CONSEQUENTIAL DAMAGES, however arising, whether in warranty, strict liability, contract, tort, negligence or otherwise, including but not limited to loss of profits or
revenue, loss of total or partial use of the Products or facilities or services, downtime cost, or claims of the Purchaser for such or other damages whether on account of Products furnished hereunder or delays in delivery thereof or services performed upon or with respect to such Products. Unison's liability on any claim whether in warranty, strict liability, contract, tort, negligence or otherwise for any loss or damage arising out of, connected with, or resulting from this contract or the performance or breach thereof, or from the design, manufacture, sale, delivery, resale, repair, replacement, installation, technical direction of installation, inspection, servicing, operation or use of any Product covered by or furnished under this contract shall in
no case (except as provided in the section entitled "Patent Indemnity") exceed the purchase price allocable to the Product or Part thereof which gives rise to the claim.

Information Furnished Purchaser – Any design, manufacturing drawings or other information or materials submitted to the Purchaser and not intended for dissemination by Purchaser remain the exclusive property of Unison and may not, without its consent, be copied or communicated to a third party.

Patent Indemnity – Unison shall at its own expense defend any suits or proceedings brought against purchaser insofar as based on an allegation that Products furnished hereunder constitute an infringement of any claim of any patent of the United States of America, other than a claim covering a process performed by said Products or a product produced by said Product, provided that such Products are manufactured by Unison, are not supplied
according to Purchaser's detailed design, are used as sold by Unison. If Purchaser has made all payments then due hereunder and notified Unison promptly in writing and given authority, information and assistance for the defense of said suit or proceeding, Unison shall pay all damages and costs awarded in any suit or proceeding so defended, provided that this indemnity shall not extend to any infringement based upon the combination of said Products or any portion thereof with other Products or things not furnished hereunder. Unison shall not be responsible for any settlement of such suit or proceeding made without its written consent. If in any suit or proceeding defended hereunder any Product is held to constitute infringement, and its use is enjoined, Unison shall, at its option and its own expense, either replace said Products with non-infringing Products; or modify them so that they become non-infringing; or remove them and refund the purchase price and the transportation costs thereof. THE FOREGOING STATES THE ENTIRE LIABILITY OF UNISON WITH RESPECT TO PATENT INFRINGEMENT.

To the extent that said Products or any portion thereof are supplied according to Purchaser's detailed design or instructions, or modified by Purchaser, or combined by Purchaser with equipment or things not furnished hereunder, or are used by Purchaser to perform a process, or produce a product, and by reason of said design, instructions, modification, combination, performance or production, a suit or proceeding is brought against Unison, Purchaser agrees to indemnify Unison in the manner and to the extent Unison indemnifies Purchaser in this section.

Assignment – Any assignment of this contract or any rights hereunder, without prior written consent of Unison by a duly authorized representative thereof shall be void.

Termination – Any order or contract may be cancelled by Purchaser only upon payment of reasonable charges (including an allowance for profit) based upon costs and expenses incurred, and commitments made by Unison.

Partial Invalidity – If any provision herein or portion thereof shall for any reason be held invalid or unenforceable, such invalidity or enforceability shall not affect any other provision or portion thereof, but these conditions shall be construed as if such invalid or unenforceable provision or portion thereof had never been contained therein.

Remedies – The remedies expressly provided for in these conditions shall be in addition to any other remedies that Unison may have under the Uniform Commercial Code or other applicable law.

Note: Sale of the Products described or referred to herein at the price indicated is expressly conditioned upon these terms and conditions. Any confirmatory action by the Purchaser hereunder, or any acceptance of such Products, shall constitute assent to said terms and conditions. Any additional or different terms or conditions set forth in the Purchaser's order or other communications are objected to by Unison and shall not be effective or binding unless assented to in writing by an authorized representative of Unison

UNISON SOLUTIONS

WARRANTY STATEMENT

Unison Solutions, Inc. (Unison) is committed to providing quality products and services to its customers. As a demonstration of this commitment, Unison offers the following warranty on its products.

Grant of Warranty: Unison provides this warranty for its equipment under the terms and conditions which are detailed herein. This warranty is granted to the person, corporation, organization, or legal entity (Owner), which owns the equipment on date of start-up. This warranty applies to the owner during the warranty period, and is not transferable.

Warranty Coverage: Equipment that is determined by Unison to have malfunctioned during the warranty period under normal use solely as a result of defects in manufacturing workmanship or materials shall be repaired or replaced at Unison's option. Unison's liability under this warranty to the Owner shall be limited to Unison's decision to repair or replace, at its factory or in the field, items deemed defective after inspection at the factory or in the field.

Warranty Exclusions: All equipment, parts and work not manufactured or performed by Unison carry their own manufacturer's warranty and are not covered by this warranty. Unison's warranty does not override, extend, displace or limit those warranties. Unison's only obligation regarding equipment, parts and work manufactured or performed by others shall be to assign to the Owner whatever warranty Unison receives from the original manufacturer. Unison does not warrant its products from malfunction or failure due to shipping or storage damage, deterioration due to exposure to the elements, vandalism, accidents, power disturbances, or acts of nature or God. This warranty does not cover damage due to misapplication, abuse, neglect, misuse, improper installation, or lack of proper service and/or maintenance, nor does it cover normal wear and tear. This warranty does not apply to modifications not specifically authorized in writing by Unison or to parts and labor for repairs not made by Unison or an authorized warranty service provider. This warranty does not cover incidental or consequential damages or expenses incurred by the Owner or any other party resulting from the order, and/or use of its equipment, whether arising from breach of warranty, non-conformity to order specifications, delay in delivery, or any loss sustained by the Owner. No agent or employee of Unison has any authority to make verbal representations or warranties of any goods manufactured and sold by Unison without the written authorization signed by an authorized officer of Unison. Unison warrants the equipment designed and fabricated to perform in accordance with the specifications as stated in the proposal for the equipment and while the equipment is properly operated within the site specific design limits for that equipment. Any alterations or repair of Unison's equipment by personnel other than those directly employed by, or authorized by Unison shall void the warranty unless otherwise stated under specific written guidelines issued by Unison to the Owner. This warranty does not cover corrosion or premature wear or failure of components resulting from the effects caused by siloxanes, hydrogen sulfide or volatile organic compounds in excess of the design limits. All media must be purchased through Unison Solutions or approved in writing by Unison Solutions during warranty period. Media purchased though alternate sources and not approved in writing by Unison shall void the warranty. The design limit is based on site specific gas data provided by the Owner prior to the proposal for the equipment. Owner shall be responsible for all maintenance services, including, but not limited to, lubricating and cleaning the equipment, inspecting and replacing expendable parts (i.e., gas separation membranes), media replacement, making minor adjustments and performing operating checks, all in accordance with the procedures outlined in Unison's maintenance literature. Unison does not warrant the future availability of expendable maintenance items.

Warranty Period: This Unison warranty is valid for 18 months from the time the equipment is shipped from Unison's factory or 12 months from the date of startup, whichever occurs first.

Repairs During Warranty Period: All warranty claim requests must be initiated in writing for processing and tracking purposes. Written authorization shall be issued to the Owner upon claim approval and/or field inspection. When field service is deemed necessary in order to determine a warranty claim, the costs associated with travel, lodging, etc. shall be the responsibility of the Owner except under prior agreement for a field inspection. This warranty does not include reimbursement of any costs for shipping the equipment or parts to Unison or an authorized service establishment, or for labor and/or materials required for removal or reinstallation of equipment or parts in connection with a warranty repair. This warranty covers only those repairs that have been conducted by Unison or by a Unison authorized warranty service provider, or by someone specifically authorized by Unison to perform a particular repair or service activity. All component parts replaced under the terms of this warranty shall become the property of Unison.

UNISON ASSUMES NO OTHER WARRANTY FOR ITS EQUIPMENT, EITHER EXPRESS OR IMPLIED, INCLUDING ANY IMPLIED WARRANTY OF MERCHANTABILITY, FITNESS FOR ANY PARTICULAR PURPOSE, OR NONINFRINGEMENT, OR LIABILITY FOR ANY INCIDENTAL OR CONSEQUENTIAL DAMAGE.

5451 Chavenelle Road, Dubuque, Iowa 52002 ■ [O] 563.585.0967 [F] 563.585.0970 ■ www.unisonsolutions.com

BUDGET MEMO
GAS UPGRADING SYSTEM

Date: 3/20/2025
Expires: Budgetary

Tyler Dougherty
Carollo Engineering

Memo Number: Px-424-4276.3
Project Name: MMSD Gas Upgrading System

Unison Solutions, Inc., is pleased to provide this **BUDGET** memo for a Gas Upgrading System for the MMSD Project. This memo includes all the CAD design services, technician labor, fabrication, and materials to construct a Gas Upgrading System.

Thank you for giving Unison Solutions the opportunity to provide you with the enclosed proposal. If you have questions or require additional information, please contact me at your convenience.

Sincerely,

Curt Schiesl
Unison Solutions, Inc.
Phone: (563)-227-4154
Cell: (563)-239-4317
Curt.Schiesl@unisonsolutions.com

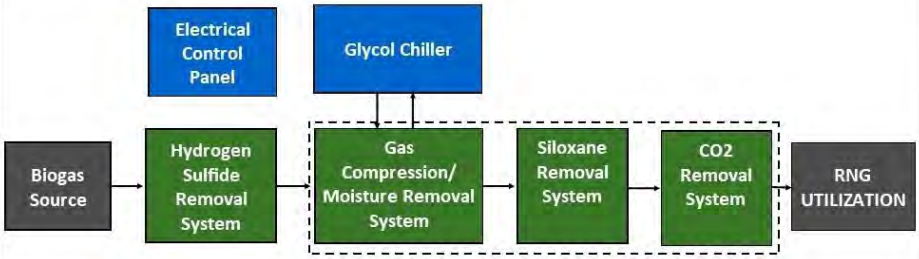

Equipment	Mounting	Electrical Classification
Hydrogen Sulfide Removal System	Standalone	Class I, Division 1
Gas Compression/Moisture Removal System	Skid Mounted	Class I, Division 1
Siloxane Removal System	Skid Mounted	Class I, Division 1
CO2 Removal System	Skid Mounted	Class I, Division 1
Glycol Chiller	Standalone	Unclassified
Electrical Control Panel	Standalone	Unclassified

DESIGN CONDITIONS

Design Conditions	
Minimum ambient temperature (°F) [1]	40
Maximum ambient temperature (°F)	100
Site elevation ('AMSL)	<1,000
Minimum gas flow (scfm)	0
Maximum gas flow (scfm)	800
Gas inlet pressure ("WC)	4-8
Biogas inlet temperature (°F)	100
Relative humidity (%)	70-100
Methane - CH_4 (vol %)	63
Carbon Dioxide - CO_2 (vol %)	36.3
Nitrogen - N_2 (vol %)	≤0.5
Oxygen - O_2 (vol %)	≤0.2
Hydrogen sulfide - H_2S (ppmv)	400
Siloxanes[2] (L2, L3, L4, L5, D3, D4, D5, D6)(ppbv)	See samples
Volatile Organic Compounds (VOCs)(ppbv)[2]	See samples

1. *Freeze protection not included.*
2. ***Gas data based on two similar wwtp gas samples.***

RNG MASS BALANCE

Parameter	Biogas	Product Gas	Tail Gas
Flow (SCFM)	800.00	509.83	290.17
Pressure (psig)	0.20	190	<1
Temperature (°F)	95.00	<120	75.00
CH4 (vol %)	62.85	98.11	0.89
CO2 (vol %)	36.40	0.94	98.70
N2 (vol %)	0.50	0.77	0.02
O2 (vol %)	0.20	0.17	0.25
H2O (vol %)	0.05	0.00010	0.14
H2S (ppmv)	≤4	≤4	≤4
Total	100.00	100.00	100.00
Methane Recovery (%)		99.49%	
Heat Value (BTU/ft3)	636.67	993.90	9.02
Wobbe		1319.43	

Design and content included in this document is proprietary and remains the property of Unison Solutions, Inc.

EQUIPMENT/SUB-SYSTEMS

HYDROGEN SULFIDE REMOVAL SYSTEM

- (2) 10'Øx16'SS 316SS Hydrogen Sulfide Removal Media Vessels
- 316SS Lead Lag Piping
- Work Platform and Ladder
- Initial Charge of H_2S Removal Media

GAS COMPRESSION/MOISTURE REMOVAL SYSTEM

- Gas Compressor Inlet Moisture/Particulate Filter
- Pre-cooler
- Gas Compressors
- Oil/Gas Separator
- Oil Cooler
- Oil Particulate Filter
- Gas to Gas Heat Exchanger
- Gas to Glycol Heat Exchanger
- Moisture Separator

GLYCOL CHILLER

- Glycol Chiller
- Initial fill of Propylene Glycol/Water Mixture

SILOXANE/VOC REMOVAL SYSTEM

- (4) 42"Øx12'SS 316SS Siloxane/VOC Removal Media Vessels
- 316SS Series Piping
- Work Platform and Ladder
- Initial charge of Media
- Final Particulate Filter

CO_2 REMOVAL SYSTEM

- Triple Pass Membrane CO_2 Removal System
- Product Gas Analyzer
- Product Gas Flow Meter

CONTROL SYSTEM

- System Control Panel

Design and content included in this document is proprietary and remains the property of Unison Solutions, Inc.

TEMPERATURE CONTROLLED ENCLOSURE

- Steel Exterior
- Heater
- Ventilation Fan and Intake Louvers
- LEL
- LED Light Fixtures

SITE REQUIREMENTS

ELECTRICAL CLASSIFICATION

- NEC Class I, Division 1 Group D Areas
    - Hydrogen Sulfide Removal System
    - Gas Compression/Moisture Removal/CO2 Removal System
    - Siloxane Removal System
- Unclassified Electrical Areas
    - Glycol Chiller
    - Gas Upgrading System Control Panel

EQUIPMENT MOUNTING

- Skid Mounted
    - Gas Compression/Moisture Removal/CO2 Removal System
    - Gas Upgrading System Control Panel
- Standalone
    - Hydrogen Sulfide Removal System
    - Glycol Chiller
    - Siloxane Removal System

Design and content included in this document is proprietary and remains the property of Unison Solutions, Inc.

MAINTENANCE

Gas Conditioning System Maintenance	
H_2S Removal Media	UNI-H2S; Pelletized Iron Hydroxide
H_2S Removal Vessel	(2) 10'Ø x 16' Straight Side 316SS
Media per Vessel	37,400lbs
Replacement Media & Pad Cost per Vessel[1]	$63,000.00
H2S Concentration	400ppmv
Estimated Media Life per Vessel[3]	135 days
Siloxane Removal Media	UNI-XXXX – Activated Carbon
Siloxane Removal Vessel	(4) 42"Ø x 12' Straight Side 316SS
Media per Vessel	3,300lbs [13,200lbs/system]
Media Cost (system)[1]	$82,000.00
Estimated Media Life[3]	Based on Fond du Lac: 143 days
	Based on South Platte: 278 days
Skid Maintenance[2]	$6,500.00/yr

1. *Does not include shipping, labor, or disposal of new/spent media.*
2. *Clean Inlet M/P Filter, replace oil filter, clean chiller condenser, etc.*
3. *H2S/VOC Unavailable. Media life to be determined at a later date.*

Estimated Electrical Parasitic (*480V/3Ø/60Hz*)					
	Installed		Calculated Run Load		
	Motor[1]	FLA[2]	BHP[3]	RLA[4]	Calculated kW
Compressor(2x)	300		240		358
Oil Cooler (2x)	3		2.4		3.6
Condensate Pump	0.5		0.4		0.3
Glycol Chiller		134.6		107.7	89.4
Controls & Aux Equip		6.2		5	4.1
				Run Load kW[5]	455.4

1. *Installed Motor Horsepower Nameplate*
2. *Full Load Amps from non-motor loads*
3. *Brake Horsepower*
4. *Run Load Amps; calculated at approximately 80% of FLA.*

Enclosure Electrical Parasitic			
	HP	Amps	Calculated kW
Heater			15
Exhaust Fan	1/2		0.3

1. *Enclosure electrical loads run intermittently as needed*

Design and content included in this document is proprietary and remains the property of Unison Solutions, Inc.

DELIVERY SCHEDULE

- Equipment delivery is subject to confirmation at the time of order placement and/or submittal approval

PRICING SUMMARY

- Price includes all labor and expenses associated with the fabrication of the system.
- Prices do not reflect any taxes that may be applicable.
- Price is FCA; Factory, Dubuque, IA 52002, per Incoterms 2010.
- Price does not include Start-up and Commissioning. Costs are shown below.
- Prices are in US Dollars
- Media Escalation: Media pricing is directly influenced by US imposed tariffs. Unison may adjust pricing for the media provided should there be future tariffs assigned to this product.

Biogas Conditioning System	
Hydrogen Sulfide Removal System	$550,000.00
Gas Upgrading System	$3,060,000.00
Siloxane Removal System	$348,000.00
Equipment Enclosure	$415,000.00
Start-Up & Commissioning **ESTIMATE**	$70,000.00
Total	**$4,443,000.00**

PRICE DOES NOT INCLUDE

- Shipping of equipment to jobsite
- Any maintenance work after start-up
- H2S or siloxane removal media after initial fill
- Performance guarantee or service/maintenance contract
- Any gas testing or analyses
- Bonds of any kind
- Liquidated & Actual Damages are the sole financial responsibility of purchasing contractor
- Permitting for the installation of the equipment or air permits
- Freeze protection; including insulation and/or heat trace and heat trace power
- Pipe stands for field piping
- Anchor bolts
- Compliance with the American Iron & Steel Act, as Gas Conditioning equipment is exempt
- Equipment is constructed using both foreign and domestic materials and does not meet BABA requirements.

WARRANTY

- Unison Solutions, Inc. will warrant all workmanship and materials in conformance with the attached Warranty Statement. Warranty is valid for **18** months from the time the equipment is ready to ship from Unison's factory or **12** months from the date of startup, whichever occurs first.

Design and content included in this document is proprietary and remains the property of Unison Solutions, Inc.

UNISON

Unison Solutions, Inc. Standard Terms and Conditions of Sale

General – Unless otherwise expressly agreed in writing by a duly authorized representative of Unison Solutions, Inc. ("Unison") these terms and conditions supersede all other communications and agreements. Despite any conflicting or different terms and conditions in any order or acceptance of Purchaser, all sales and shipments shall exclusively be governed by these terms and conditions. "Products" as used herein shall include products, parts and services furnished to Purchaser by Unison.

Delivery – Unless otherwise agreed in writing, Products are delivered F.O.B. shipping point. Notwithstanding any agreement with respect to delivery terms or payment of transportation charges, the risk of loss or damage shall pass to Purchaser and delivery shall be deemed to be complete upon delivery to a private or common carrier or upon moving into storage, whichever occurs first, at the point of shipment for Products. Where the delivery of ready to ship Products is delayed by Purchaser, Unison may deliver such Products by moving them to storage for the account of and at the risk of Purchaser. Purchaser shall be responsible to pay Unison for said storage at a rate of $2 per square foot of space occupied by the Products or $50, per month, whichever is greater. Shipping dates are approximate and are based upon prompt receipt of all necessary information and approvals from Purchaser.

Payment – A service charge of the lesser of 1% per month or the highest rate permitted by applicable law shall be charged on all overdue accounts. Failure on the part of Purchaser to pay invoices when due shall, at the option of Unison, constitute a default in addition to all other remedies Unison may have under these conditions of sale or applicable law. If delivery is delayed by Purchaser, payment shall become due on the date Unison is prepared to make delivery.

Force Majeure – Unison shall not be liable for loss, damage, detention, or delay, nor be deemed to be in default from causes beyond its reasonable control or from fire, strike or other concerted action of workmen, act or omission of any governmental authority or of Purchaser, compliance with import or export regulations, insurrection or riot, embargo, delays or shortages in transportation, or inability to obtain necessary engineering talent, labor, materials, or manufacturing facilities from usual sources. In the event of delay due to any such cause, the date of delivery will be postponed by such length of time as may be reasonably necessary to compensate for the delay.

Warranty – Unison warrants to the Purchaser that all Products shall be free of defects in design, material and workmanship for a period of eighteen (18) months from the date the Products are ready to ship to Purchaser, or twelve (12) months from date of initial start-up, whichever occurs first, except as set forth below. Should any failure to conform with this warranty appear prior to or after shipment of the Product to Purchaser during the specified periods under normal and proper use and provided the Product has been properly stored, installed, handled and maintained by the Purchaser, Unison shall, if given prompt notice by Purchaser, repair or replace, the non-conforming Product or authorize repair or replacement by the Purchaser at Unison's expense. Unison warrants Products or parts thereof repaired or replaced pursuant to the above warranty under normal and proper use, storage, handling, installation, and maintenance, against defects in design, workmanship and material for a period of thirty (30) days from date of start-up of such repaired or replaced Products or parts thereof or the expiration of the original Product warranty, whichever is longer. The Unison warranty does not extend to Products not manufactured by Unison. The Unison warranty does not apply to defects in material provided by Purchaser or to design stipulated by Purchaser. If any nonconformity with this warranty appears within 45 days after the services are performed, the exclusive obligation of Unison shall be to re-perform the services in a conforming manner.

THE FOREGOING WARRANTIES ARE EXCLUSIVE AND IN LIEU OF ALL OTHER WARRANTIES OF QUALITY, WRITTEN, ORAL OR IMPLIED, AND ALL OTHER WARRANTIES, INCLUDING WITHOUT LIMITATION ANY WARRANTY OF MERCHANTABILITY OR FITNESS ARE HEREBY DISCLAIMED.

Limitation of Liability – IN NO EVENT SHALL UNISON BE LIABLE FOR SPECIAL, INDIRECT, INCIDENTAL OR CONSEQUENTIAL DAMAGES, however arising, whether in warranty, strict liability, contract, tort, negligence or otherwise, including but not limited to loss of profits or
revenue, loss of total or partial use of the Products or facilities or services, downtime cost, or claims of the Purchaser for such or other damages whether on account of Products furnished hereunder or delays in delivery thereof or services performed upon or with respect to such Products. Unison's liability on any claim whether in warranty, strict liability, contract, tort, negligence or otherwise for any loss or damage arising out of, connected with, or resulting from this contract or the performance or breach thereof, or from the design, manufacture, sale, delivery, resale, repair, replacement, installation, technical direction of installation, inspection, servicing, operation or use of any Product covered by or furnished under this contract shall in
no case (except as provided in the section entitled "Patent Indemnity") exceed the purchase price allocable to the Product or Part thereof which gives rise to the claim.

Information Furnished Purchaser – Any design, manufacturing drawings or other information or materials submitted to the Purchaser and not intended for dissemination by Purchaser remain the exclusive property of Unison and may not, without its consent, be copied or communicated to a third party.

Patent Indemnity – Unison shall at its own expense defend any suits or proceedings brought against purchaser insofar as based on an allegation that Products furnished hereunder constitute an infringement of any claim of any patent of the United States of America, other than a claim covering a process performed by said Products or a product produced by said Product, provided that such Products are manufactured by Unison, are not supplied
according to Purchaser's detailed design, are used as sold by Unison. If Purchaser has made all payments then due hereunder and notified Unison promptly in writing and given authority, information and assistance for the defense of said suit or proceeding, Unison shall pay all damages and costs awarded in any suit or proceeding so defended, provided that this indemnity shall not extend to any infringement based upon the combination of said Products or any portion thereof with other Products or things not furnished hereunder. Unison shall not be responsible for any settlement of such suit or proceeding made without its written consent. If in any suit or proceeding defended hereunder any Product is held to constitute infringement, and its use is enjoined, Unison shall, at its option and its own expense, either replace said Products with non-infringing Products; or modify them so that they become non-infringing; or remove them and refund the purchase price and the transportation costs thereof. THE FOREGOING STATES THE ENTIRE LIABILITY OF UNISON WITH RESPECT TO PATENT INFRINGEMENT.

To the extent that said Products or any portion thereof are supplied according to Purchaser's detailed design or instructions, or modified by Purchaser, or combined by Purchaser with equipment or things not furnished hereunder, or are used by Purchaser to perform a process, or produce a product, and by reason of said design, instructions, modification, combination, performance or production, a suit or proceeding is brought against Unison, Purchaser agrees to indemnify Unison in the manner and to the extent Unison indemnifies Purchaser in this section.

Assignment – Any assignment of this contract or any rights hereunder, without prior written consent of Unison by a duly authorized representative thereof shall be void.

Termination – Any order or contract may be cancelled by Purchaser only upon payment of reasonable charges (including an allowance for profit) based upon costs and expenses incurred, and commitments made by Unison.

Partial Invalidity – If any provision herein or portion thereof shall for any reason be held invalid or unenforceable, such invalidity or enforceability shall not affect any other provision or portion thereof, but these conditions shall be construed as if such invalid or unenforceable provision or portion thereof had never been contained therein.

Remedies – The remedies expressly provided for in these conditions shall be in addition to any other remedies that Unison may have under the Uniform Commercial Code or other applicable law.

Note: Sale of the Products described or referred to herein at the price indicated is expressly conditioned upon these terms and conditions. Any confirmatory action by the Purchaser hereunder, or any acceptance of such Products, shall constitute assent to said terms and conditions. Any additional or different terms or conditions set forth in the Purchaser's order or other communications are objected to by Unison and shall not be effective or binding unless assented to in writing by an authorized representative of Unison

UNISON SOLUTIONS

WARRANTY STATEMENT

Unison Solutions, Inc. (Unison) is committed to providing quality products and services to its customers. As a demonstration of this commitment, Unison offers the following warranty on its products.

Grant of Warranty: Unison provides this warranty for its equipment under the terms and conditions which are detailed herein. This warranty is granted to the person, corporation, organization, or legal entity (Owner), which owns the equipment on date of start-up. This warranty applies to the owner during the warranty period, and is not transferable.

Warranty Coverage: Equipment that is determined by Unison to have malfunctioned during the warranty period under normal use solely as a result of defects in manufacturing workmanship or materials shall be repaired or replaced at Unison's option. Unison's liability under this warranty to the Owner shall be limited to Unison's decision to repair or replace, at its factory or in the field, items deemed defective after inspection at the factory or in the field.

Warranty Exclusions: All equipment, parts and work not manufactured or performed by Unison carry their own manufacturer's warranty and are not covered by this warranty. Unison's warranty does not override, extend, displace or limit those warranties. Unison's only obligation regarding equipment, parts and work manufactured or performed by others shall be to assign to the Owner whatever warranty Unison receives from the original manufacturer. Unison does not warrant its products from malfunction or failure due to shipping or storage damage, deterioration due to exposure to the elements, vandalism, accidents, power disturbances, or acts of nature or God. This warranty does not cover damage due to misapplication, abuse, neglect, misuse, improper installation, or lack of proper service and/or maintenance, nor does it cover normal wear and tear. This warranty does not apply to modifications not specifically authorized in writing by Unison or to parts and labor for repairs not made by Unison or an authorized warranty service provider. This warranty does not cover incidental or consequential damages or expenses incurred by the Owner or any other party resulting from the order, and/or use of its equipment, whether arising from breach of warranty, non-conformity to order specifications, delay in delivery, or any loss sustained by the Owner. No agent or employee of Unison has any authority to make verbal representations or warranties of any goods manufactured and sold by Unison without the written authorization signed by an authorized officer of Unison. Unison warrants the equipment designed and fabricated to perform in accordance with the specifications as stated in the proposal for the equipment and while the equipment is properly operated within the site specific design limits for that equipment. Any alterations or repair of Unison's equipment by personnel other than those directly employed by, or authorized by Unison shall void the warranty unless otherwise stated under specific written guidelines issued by Unison to the Owner. This warranty does not cover corrosion or premature wear or failure of components resulting from the effects caused by siloxanes, hydrogen sulfide or volatile organic compounds in excess of the design limits. All media must be purchased through Unison Solutions or approved in writing by Unison Solutions during warranty period. Media purchased though alternate sources and not approved in writing by Unison shall void the warranty. The design limit is based on site specific gas data provided by the Owner prior to the proposal for the equipment. Owner shall be responsible for all maintenance services, including, but not limited to, lubricating and cleaning the equipment, inspecting and replacing expendable parts (i.e., gas separation membranes), media replacement, making minor adjustments and performing operating checks, all in accordance with the procedures outlined in Unison's maintenance literature. Unison does not warrant the future availability of expendable maintenance items.

Warranty Period: This Unison warranty is valid for 18 months from the time the equipment is shipped from Unison's factory or 12 months from the date of startup, whichever occurs first.

Repairs During Warranty Period: All warranty claim requests must be initiated in writing for processing and tracking purposes. Written authorization shall be issued to the Owner upon claim approval and/or field inspection. When field service is deemed necessary in order to determine a warranty claim, the costs associated with travel, lodging, etc. shall be the responsibility of the Owner except under prior agreement for a field inspection. This warranty does not include reimbursement of any costs for shipping the equipment or parts to Unison or an authorized service establishment, or for labor and/or materials required for removal or reinstallation of equipment or parts in connection with a warranty repair. This warranty covers only those repairs that have been conducted by Unison or by a Unison authorized warranty service provider, or by someone specifically authorized by Unison to perform a particular repair or service activity. All component parts replaced under the terms of this warranty shall become the property of Unison.

UNISON ASSUMES NO OTHER WARRANTY FOR ITS EQUIPMENT, EITHER EXPRESS OR IMPLIED, INCLUDING ANY IMPLIED WARRANTY OF MERCHANTABILITY, FITNESS FOR ANY PARTICULAR PURPOSE, OR NONINFRINGEMENT, OR LIABILITY FOR ANY INCIDENTAL OR CONSEQUENTIAL DAMAGE.

5451 Chavenelle Road, Dubuque, Iowa 52002 ■ [O] 563.585.0967 [F] 563.585.0970 ■ www.unisonsolutions.com

Offer 800-25-005500 dated May 7, 2025

2G Quotation

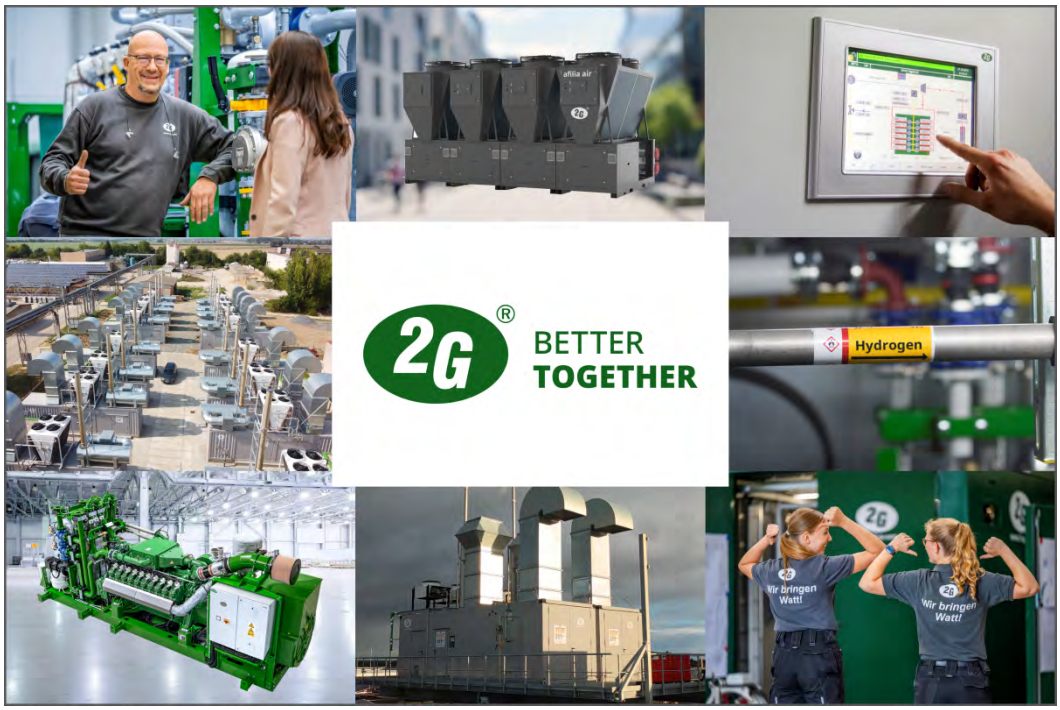

Prepared for:	Carollo Engineers
Quotation No.:	800-25-005500
Project Ref.:	Madison WWTP
Salesperson:	Jon Going
Electrical output:	2x 1.5 kWe

2G Energy Inc. | A subsidiary of 2G Energy AG
205 Commercial Drive | St. Augustine 32092, FL | United States of America | Phone +1 (904) 579 3217 | ar@2-g.com| ap@2-g.com | http://www.2g-energy.com
Tax Reference 99-0373984
HSBC Bank USA, N.A. | Account 104003146 | Routing Number: 022000020 | ABA Number (Wires): 021001088

Offer 800-25-005500 dated May 7, 2025

Technical Data Sheet

mtu 12V4000 GS

TD_1323_L64_1503_60_1_EN_US_V2 **GG12V4000D2M**

Application			**Power Generation**	
Operation mode			**Grid Parallel**	
Engine type			**12V4000L64FB**	
Voltage / Frequency	V / Hz	**4160**		**60**
Cooling water temperature (in / out)	°F		**171 / 198**	
NOx emissions (dry)	g/bhp-hr		**< 1**	
Mixture cooler 1st stage water temperature (in)	°F			
Mixture cooler 2nd stage water temperature (in)	°F		**147**	
Exhaust gas temperature	°F		**765**	
Catalytic converter			**not included**	
Special equipment			**Gearbox**	
Elevation above sea level	ft / psi	**328**		**14.5**
Combustion air temperature	°F		**95**	
Maximum ambient air dew point on site	°F		**79.0**	
Standard specifications and regulations				

Energy balance	**%**	**100**	**75**	**50**
Electrical Power [2) 3)]	kWe	1503	1127	751
Energy input [4) 5)]	kBTU/hr	11824	9105	6394
Thermal output total [6)]	kBTU/hr	5760	4521	3271
Thermal output engine (block, lube oil, 1st stage mixture cooler) [6)]	kBTU/hr	3038	2314	1629
Thermal output mixture cooler 1st stage[6)]	kBTU/hr			
Thermal output mixture cooler 2nd stage [6)]	kBTU/hr	239	145	74
Exhaust heat optional (248 °F) [6)]	kBTU/hr	(2483)	(2062)	(1568)
Engine power ISO 3046-1 [2)]	bhp	2092	1576	1063
Generator efficiency at power factor = 1	%	97.1	96.8	95.9
Electrical efficiency [4)]	%	43.4	42.3	40.1
Total efficiency	%	92.1	91.9	91.3
Power consumption [7)]	kWe			
Combustion air / Exhaust gas				
Combustion air volume flow [1)]	ft³/min	3291	2483	1692
Combustion air mass flow	lb/hr	15927	12017	8186
Exhaust gas volume flow, wet [1)]	ft³/min	3675	2780	1904
Exhaust gas volume flow, dry [1)]	ft³/min	3274	2471	1686
Exhaust gas mass flow, wet	lb/hr	17491	13224	9053
Exhaust temperature after turbocharger	°F	765	814	874
Reference fuel [8)]				
Natural gas			not applicable	
Sewage gas			CH_4 60 Vol.%; CO_2 40 Vol.%	
Biogas			CH_4 60 Vol.%; CO_2 40 Vol.%	
Landfill gas			CH_4 60 Vol.%; CO_2 40 Vol.%	
Propane HD 5			not applicable	
Fuel requirements [9)]				
Nominal rated methane number	MN		130	
Range of heating value: design / operation range without power derating	BTU/ft³		483.1 - 628.0 / 434.8 - 676.3	

Exhaust gas emissions [5) 8) 23) 24)] Compliance with emissions standards only for ≥ 751 kWel			
		Raw emissions	**Emissions with Aftertreatment**
NOx, stated as NO_2 (dry)	g/bhp-hr	< 1	
CO (dry)	g/bhp-hr	< 3.00	
HCHO (dry)	g/bhp-hr		
VOC (dry)	g/bhp-hr	< 0.7	

Otto-gas engine, lean burn operation with turbocharging				
Number of cylinders / configuration		12	/	v
Engine type			12V4000L64FB	
Engine speed	rpm		1500	
Bore	in		6.7	
Stroke	in		8.3	
Displacement	in³		3490.56	
Mean piston speed	ft/sec		34.45	
Compression ratio			12.5	
BMEP at nominal engine speed min-1	psi	313.7		
Lube oil consumption [10)]	gal/hr	0.07		
Exhaust back pressure min. - max. after module	in H_2O - in H_2O		12 - 24	
Turbocharger setting			H66-TA55	
Generator				
Generator type			S9M1DA42Wdg91	
Rating power (temperature rise class F) [11)]			2156	
Insulation class / temperature rise class			H / F	
Winding pitch			5/6	
Protection			IP 23	
Max. allowable p.f. inductive (overexcited) / capacitive (underexcited) [12)]			0.8 / 1	
Voltage tolerance / frequency tolerance	%		+/- 5 / +/- 5	
Engine cooling water system				
Coolant temperature (in / out), design	°F	171 / 198		
Coolant flow rate, constant [13) 14)]	gal/min	255.37		
Pressure drop, design [14)] Cv value [13) 15)]	psi / gal/min	32.0		172.5
Max. operation pressure (coolant before engine)	psi		87	
Mixture cooler 1st stage, external				
Coolant temperature (in / out), design	°F			
Coolant volumetric flow, design, constant [13) 14)]	gal/min			
Pressure drop, design [14)] Cv value [13) 15)]	psi / gal/min			
Min. coolant flow rate / min. operation gauge pressure	gal/min / psi			
Max. operation pressure before mixture cooler	psi			

Technical Data Sheet

mtu 12V4000 GS

TD_1323_L64_1503_60_1_EN_US_V2 **GG12V4000D2M**

Mixture cooler 2nd stage, external						
Coolant temperature (in / out), design		°F	147 / 151.0			
Coolant volumetric flow, design, constant [13) 14)]		gal/min	145.3			
Pressure drop, design [14)]	Cv value [13) 15)]	psi / gal/min	7.61			202.3
Max. operation pressure before mixture cooler		psi		87		
Heating circuit interface						
Engine coolant temperature (in / out), design		°F				
Heating water temperature (in / out), design		°F				
Heating water flow rate, design [14) 16)]		gal/min				
Pressure drop in heat exchanger, design [14)]	Cv value [15) 16)]	psi / gal/min				
Max. operation gauge pressure (heating water)		psi				
Room ventilation						
Genset ventilation heat [17)]		kBTU/hr		395		
Inlet air temperature: (min./design/max.)		°F		86 / 95 / 104		
Min. engine room temperature [18)]		°F		59		
Max. temperature difference ventilation air (in / out)		°F		36		
Min. supply air volume flow rate (combustion + ventilation) [19)]		ft³/min		13500		
Gearbox		**%**	**100**	**75**		
Efficiency		%	99.2	99.1		98.9
Starter battery						
Nominal voltage / power / capacity required		V / kW / Ah		24 / 9 / --		
Filling quantities						
First filling quantity lube oil / refilling amount lube oil		gal		85 / 74		
Coolant in engine circuit		gal		53		
Coolant in mixture cooler		gal		5		
Heating water for plate heat exchanger [20)]		gal				
Lube oil for gearbox		gal		17		
Gas regulation line						
Nominal size / gas pressure min. - max. (at gas regulation line inlet)		DN / psi - psi	125			2.0 - 3.6
Engine sound level [21)] (1 meter distance, free field) +3 dB(A) for total A-weighted level tolerance; + 5 dB for single octave level						
Frequency		Hz	**63**	**125**	**250**	**500**
Sound pressure level		dB	83.3	87.4	88.6	91.3
Frequency		Hz	**1000**	**2000**	**4000**	**8000**
Sound pressure level		dB	90.1	87.3	92.9	103.9
Linear total sound pressure level		Lin dB	104.9			
A-weighted total sound pressure level		dB(A)	104.5			
A-weighted total sound power level		dB(A)	123.9			
Undampened exhaust noise [21)] (1 meter distance to outlet within 90°, free field) +3 dB(A) for total A-weighted level tolerance; + 5 dB for single octave level						
Frequency		Hz	**63**	**125**	**250**	**500**
Sound pressure level		dB	118.5	120.3	110.8	102.2
Frequency		Hz	**1000**	**2000**	**4000**	**8000**
Sound pressure level		dB	92.9	92.3	92.1	82.5
Linear total sound pressure level		Lin dB	122.8			
A-weighted total sound pressure level		dB(A)	108.4			
A-weighted total sound power level		dB(A)	121.3			
Dimensions (aggregate)						
Length		in		~ 240		
Width		in		~ 80		
Height		in		~ 80		
Weight		lb		~ 40500 (~ 39500)		
Power derating						
Design drawing						
Load step						
Maintenance plan						
Configuration change				No		
Boundary conditions and consumables						
Systems and consumables have to conform to the following actual company standards:			A001072			

1) Normal cubic meter at 15 psi and T = 273 K
2) Prime power operation will be designed specific to the project
3) Generator gross power at nominal voltage, power factor = 1 and nominal frequency (ISO 8528-6)
4) According to ISO 3046 (+ 5 % tolerance), using reference fuel used at nominal voltage, power factor = 1 and nominal frequency
5) Emission values during grid parallel operation
6) Thermal output at layout temperature; tolerance +/- 8 %
7) Max. admissible cos phi depending on voltage in accordance with the requirements of the valid 'Standard specifications and regulations'
8) Deviations from the layout parameters respectively the reference fuel can have influence on the obtained efficiency and exhaust emissions
9) Functional capability
10) Reference value at nominal load (without amount of oil exchange) oil density set to 860g/l
11) If the voltage tolerance is greater than +/-5%, the theoretical service life of the insulation system may be reduced due to the permanent max. nominal conditions of the generator.
12) Max. allowable cos phi at nominal power (view of producer)
13) Stated values for cooling fluid composition 65% water and 35% glycol, adaption for use of other cooling fluid composition necessary
The system design must consider the tolerance.
14) Pressure loss at reference flow rate
15) The Cv value declares the volumetric flow in gal/min at a pressure drop of 1 psi. Min. and max. flow rate limits are defined.
16) Stated values for pure water, adaption for other cooling fluid composition necessary
17) Only generator- and surface losses
18) Frost-free conditions must be guaranteed
19) Amount of ventilation air must be adapted to the gas safety concept
20) Assemblies including pipe work
21) All sound pressure levels at nominal load, according to ISO 8528-10 and ISO 6798.
22) Max. admissible cos phi depending on voltage in accordance with the requirements of the valid 'Standard specifications and regulations'
23) Non-certified engine. The owner/operator must comply with EPA 40CFR60 JJJJ, state and local requirements
24) A catalyst may be required to meet applicable emission requirements / VOC emissions based on natural gas with C2+ < 4 %

Offer 800-25-005500 dated May 7, 2025

2G Energy Inc. | A subsidiary of 2G Energy AG

Carollo Engineers	**Quotation No.:**	800-25-005500
2795 Mitchell Drive	**Date:**	May 7, 2025
94598 Walnut Creek	**Sales Contact:**	Jon Going
United States of America	**Phone:**	
Wisconsin	**E-mail:**	j.going@2-g.com
	Customer No.:	23003205

Sales – Quotation

Dear Mr. Buhman,

Thank you very much for providing 2G with the opportunity to offer a state-of-the-art cogeneration system for your project.

Further to our discussions and correspondence about this important project, I have attached our proposal. I trust the enclosed proposal meets your requirements.

For additional information, please do not hesitate to contact me.

The 2G Energy AG and the 2G Energietechnik GmbH are certified according to:

- DIN EN ISO 9001 Quality Management Systems
- DIN EN ISO 14001 Environmental Management Systems
- DIN EN ISO 27001 Information Security Management Systems
- DIN EN ISO 50001 Energy Management Systems

With best regards

Jon Going

2G Energy Inc.

Your reference: Madison WWTP

Offer 800-25-005500 dated May 7, 2025

Offered Scope of Supply

Item	Qty.	Description	Total Price
1	**2**	**avus 1200e**	
1.1	1	Engine configuration according to Technical specification (TSP)	
1.2	1	Basic module variant 60Hz 480V BG	
1.3	1	Thermal skid unit incl. plate heat exchanger	
1.4	1	Thermal skid unit Heating circuit	
1.5	1	Thermal skid unit Intercooler circuit	
1.6	1	Thermal skid unit Dump circuit	
1.7	1	Engine block heater electrical 480V UL-Compliance (included in climate package)	
1.8	1	Oil pre-lubrication 60 Hz / 480 V (UL-Compliance)	
1.9	1	Special equipment for generator Grease fitting generator	
1.10	1	Special equipment for generator Bearing temperature monitoring	
1.11	1	Special equipment for generator Winding temperature monitoring	
1.12	1	Special equipment for generator Trace heating	

Offer 800-25-005500 dated May 7, 2025

Offered Scope of Supply

Item	Qty.	Description	Total Price
1.13	1	Starter battery lead gel	
1.14	1	Dump radiator 65 dB(A) at 10 m (33 ft)	
1.15	1	Intercooler radiator 65 dB(A) at 10 m (33 ft)	
1.16	1	Oil supply Oil pump with distributor manifold	
1.17	1	Oil circulation tanks 2x 1500 l (2x 397 gallons)	
1.18	1	Exhaust gas heat exchanger 180°C (356°F)	
1.19	1	Exhaust gas silencer 65 dB(A) at 10 m (33 ft)	
1.20	1	Insulation for exhaust gas heat exchanger	
1.21	1	Insulation for exhaust gas silencer 65 dB(A) at 10 m (33 ft)	
1.22	1	Mechanical assembly connection set for machine house installation	
1.23	1	Data interface Modbus TCP	
1.24	1	Power Plant Module integrated	
1.25	1	Gas meter Nm^3 (SCF)	

Offer 800-25-005500 dated May 7, 2025

Offered Scope of Supply

Item	Qty.	Description	Total Price
1.26	1	Heat meter MID approved	
1.27	1	Remote access Motor control	
1.28	1	Engine preservation Included	
1.29	1	Loading at the factory (included in transport)	
1.30	1	Number of documentation sets (print) 1	
1.31	1	Language of standard documentation English	
1.32	**2**	**Transport**	
1.32.1	1	Transport budgetary estimate	
1.33	**2**	**Seaworthy packaging**	

Net Sum: $2,169,429.66

Alternative / optional scope

Item	Qty.	Description	Unit Price	Total Price
A-1		**Option - 4160 Volt generator**	**+$29,850.71**	**+$59,701.42**

Offer 800-25-005500 dated May 7, 2025

A-1.1 Removed	1	Basic module variant 60Hz 480V BG	-$807,253.40	-$807,253.40
A-1.2 Added	1	Basic module variant 60Hz 4,16kV BG	+$837,104.11	+$837,104.11

Applicable Sales Tax will be levied on the Final Invoice unless the customer has provided a Sales Tax Exemption Certificate. Duties or tariffs are excluded, unless otherwise agreed.

Offer 800-25-005500 dated May 7, 2025

Product description

1. avus 1200e

A modular high efficiency Combined Heat and Power (CHP) system for the production of electricity and thermal energy.

Operation allows for electrical and/or thermal load following with seamless transition between full and partial load.

The system is designed to meet the specific norms and regulations noted below:

- Manufactured in accordance with DIN EN ISO 9001
- Generators comply with IEC 60034, NEMA MG 1.32-33, ISO 8528-3
- Generators comply with UL1004 (UL 1446 for medium voltage), CSA C22.2 n°100-14
- Gas train complies with NFPA37 (USA)/CSA 149.3 (natural gas in Canada) / CSA 149.6 (biogas in Canada) (others upon request)
- Pumps comply with UL778
- UL2200 (USA, upon request)
- ESA Field/Factory approval (US & Canada)

The 2G system interface facilitates integration with virtual power plant (VPP) networks. In addition to reliable continuous operation, the systems start/stop and partial load capabilities ensure optimal availability.

Offer 800-25-005500 dated May 7, 2025

Multiple project references are available on request, and many can be found on our website.

Performance data is detailed in the Technical Specification (TSP) of the engine manufacturer.

Proposal illustrations are examples and may differ from the actual components.
The technical instructions from 2G apply to the product included in the scope of delivery.

1.1 Engine configuration according to Technical specification (TSP)

1.2 Basic module 60Hz 480V BG

The genset is the main component of the basic module. It also includes direct interfaces for gas, electricity and exhaust gas. An SAE flange connects the four-stroke gas engine and the generator. The transmission of power from the engine's crankshaft to the generator's rotor is achieved by a flexible genset coupling.

The system complies with the following standards:

- Generator in accordance with UL 1004 & UL 1446 (low voltage)
- Generator in accordance with UL 1446 (medium voltage)
- Gas train in accordance with NFPA 37
- Pumps in accordance with UL778 Reuz

The below systems comprise the basic module, configured according to 2G standard. Details are included in the respective drawings and technical documentation. The Factory Acceptance Test and standard documentation (incl. warning labels) are included in the scope of delivery. Medium-voltage generators and custom container options may require different testing options.

Four-stroke gas engine

>> refer to technical data sheet

2G's industrial engine technology is the basis for reliable power. Units are certified for the respective gas type. System design enables various operating modes from peak load and continuous operation to flexible operation with regular start/stop prompts and partial load operation.

Mixture cooling system:
The two-stage mixture cooling system is divided into a high-temperature (HT) circuit and low-temperature (LT) circuit allowing for simple consumer-side usage of the thermal energy produced within the HT circuit.

Engine pre-lubrication:

Engine pre-lubrication using an electric pump ensures long bearing service life even with frequent starts and stops

Generator

>> refer to technical data sheet

The high efficiency synchronous generator ensures optimal energy conversion.
The system design ensures minimal heat loss, leading to the high stated efficiency. The digital voltage regulator facilitates operation through voltage dips in the grid, ensuring compliance with applicable requirements. The generator's coil winding type operates with low harmonic frequencies. The double-bearing generator achieves low friction losses. Costs are reduced by a low-maintenance brushless exciter. Bearing and winding temperature monitors are included as well as anti-condensate heaters. The generator bearings can be equipped with grease fittings.

Note:
For medium-voltage generators, the equipment of the on-site medium-voltage switchgear must be taken from the 2G TA-040.
Special features must be clarified with a project-specific single line.

Gear box:

- Converts engine speed (1500 rpm) to the 60 Hz generator speed (1800 rpm)

Mixture composition

>> refer to technical data sheet

The air/gas ratio is precisely mixed via an actuator adhering to a specific set of characteristics based on key operating parameters. This supports efficient low-emission operation. This system allows omission of common wear parts which increases reliability. The gas supply is ensured by the gas train referenced below.

Combustion air supply:
- Industrial filters ensure adequate combustion air quality
- Design enables an easy filter element change

Offer 800-25-005500 dated May 7, 2025

Gas train

- Maximum inlet gas pressure; refer to the technical data sheet
- Ball valve/shut-off valve for manual interruption of the gas supply
- Gas particulate filter for combustion gas
- Double solenoid gas shut-off valve triggered by gas detection system
- Electrical pressure adjustment valve or zero pressure regulator provides the optimal gas pressure for the gas mixer
- Flame arrestor prevents misfires from reaching the gas supply

Gas mixer

- Industry-standard model to minimize pressure loss
- The gas mixer automatically adjusts the gas-air mixture depending on the energy content and air temperature. The system maintains a homogeneous mixture with various gas types and mixtures.

Operating materials

Lubricating oil:
To ensure optimum performance and maintain warranty, only high-quality lubricants may be used. Approved oils can be found in the engine manufacturer's documentation.
Oil level monitoring and magnetic valves for automatic oil refilling are included. The corresponding peripheral pumps and tank system are available separately.
An oil pump continuously redirects a certain amount of oil into the external tank system (available separately). This option provides a significant oil volume expansion. It increases system availability and reliability.

Coolant:
2G units require water-glycol-based coolants at specified concentrations as per the technical data sheets to guarantee optimal heat dissipation and corrosion protection. Approved oils can be found in the engine manufacturer's documentation.
An electrical engine coolant pre-heating system is included in the standard scope of delivery. The system significantly improves the engine's start-up in cold conditions and allows full-load operation to be reached quickly.

Offer 800-25-005500 dated May 7, 2025

Electronics and software

2G systems comply with the highest standards of modern control technology concerning grid connection and control. 2G uses intelligent hardware and software solutions to enable flexible and reliable modes of operation. The unit is monitored and controlled by a PLC control system, ensuring maximum availability and operational safety. On-site internet connection is required, refer to TA-016 and TA-019 (customer responsibility). Protection relay testing is not included in the scope of delivery. However, if required by the utility, it can be offered separately as part of commissioning.

Electronic hardware:

- Control cabinet incl. touchscreen for system operation and central switch elements (main switch, emergency stop etc.); sheet steel construction in accordance with applicable regulations; wiring tested for functionality
- Module control cabinet (sub-distribution/interface board)

Operation and system software:

- Touchscreen display: The system is operated via an HMI mounted on the control cabinet. Simple schematics and intuitively designed menus provide access to all relevant data and settings.
- System software: Adaptable software solutions enable different modes of operation such as continuous full load and partial load operation as well as flexible modes of operation. Specific thermal and electrical daily load profiles can be applied down to the minute. Demand-driven automatic starts and stops can be programmed. Island mode operation is an available option.
- The 2G POWER PLANT option can streamline maintenance by automatically transmitting all system data and operating messages. This supports increased system availability. Also allows some settings to be modified remotely.
- Authorization levels ensure that fundamental and operation-critical modifications to programming and settings can only be performed by appropriately trained personnel. Operator and service trainings are available in order to gain higher authorization and access levels.
- Continuous data recording enables the visualization of key operating parameters as trend curves.

Note: Internet connection in accordance with TA-016 and TA-019 required (customer responsibility). Alternatives to “DSL" can be offered as an option.

Sensors and monitoring:

- Monitoring & control of engine operation: output and emissions are ensured by a performance map control system. Key operating parameters are evaluated and components (such as gas mixer and throttle valves) are adjusted accordingly.
- Temperature detection for individual cylinders and knocking sensors ensure that even minor irregularities are detected. Corresponding predefined control parameters can trigger an automatic output adjustment, if necessary.

- Ignition system monitoring: detects ignition failures to rule out defective spark plugs or a suboptimal operation. Registers the number of ignition failures in the data storage system and creates a daily report. Malfunctions within the ignition system are displayed and evaluated for individual cylinders and can be analyzed or assessed on site or remotely.
- Control/regulation and monitoring of the auxiliary drives that are included in the scope of delivery
- Gas pressure sensor
- Emergency stop control with safety relay
- Grid monitoring: monitors voltage and frequency for the grid and generator as well as the reserve power and overload

Interfaces:

Design:
The basic module described above is mounted on a robust frame. The design ensures optimal accessibility of all components, facilitating serviceability.

- Modular assembly enables transport, delivery and reassembly of modular components
- Compact design simplifies installation in locations with space constraints
- Integrated sound attenuation elements reduce noise emissions. Engine vibrations are mitigated by frame-mounted vibration dampeners.
- Powder-coated frame ensures permanent anti-corrosion protection

Gas & water interfaces:
The following flanged gas & water connection points are integrated:

- Gas connection (expansion joint included, not installed)
- Exhaust tract connection for downstream heat recovery (expansion joint included, not installed)
- Expansion joints for mixture cooling and heat dump circuit (if they are included in the scope of delivery) included, not installed

Electrical connections / customer or utility interface:
Grid connection must be provided by the customer.

Data interfaces:
Module control is available in various communication interfaces.

- Various software interfaces (optional)
- Interfaces for hardware signals (digital/analog) (optional)

Offer 800-25-005500 dated May 7, 2025

1.3 Thermal Skid Unit Engine Circuit incl. plate heat exchanger

All components required to operate the engine cooling circuit [avus a, b: secondary (2G System 3), avus c, d, e: primary (2G System 2)] and utilize the heat generated by the engine for the heating circuit, are included in the engine circuit's thermal skid unit. Among these components are the corresponding heat exchangers, pumps, valves, pipings etc. The piping is welded according to AD2000 HP100R / DIN EN 13480 and configured according to S235JR (or similar).

The following components are included in the scope of delivery:

- Electric circulation pump which further prevents heat accumulation in the combustion engine by cooling it after it is stopped. The frequency converter (e.g., for installation in the FC control cabinet) included in the scope of delivery enables the seamless regulation of the circulation pump for an optimal adaptation of the operating conditions to the external circumstances.
- Electr. three-way mixer increases the engine flow temperature (in the case of avus c-e only if no heating circuit unit is included in the scope of delivery)
- Expansion tank to compensate for pressure fluctuations included in 2G's scope of delivery (shut off enabled by cap valve)
- Safety pressure switch (1 x min., 2 x max.)
- 2 x safety temperature switches
- 2 x manual shut-off valves
- Plate heat exchanger (separation between engine cooling and heating circuit): The plate heat exchanger constitutes the heat-side interface between the engine circuit and the heating circuit of the consumer. Thanks to this principle, the 2G system may still be used to produce electricity in case of a malfunction on the heating side. Furthermore, this compartmentalization facilitates service works. Configuration as plate heat exchanger based on the counterflow principle and a highly turbulent flow lead to an efficient heat transfer. Even in the case of heavy soiling, the configuration as bolted plate heat exchanger allows for an easy leaning. Configuration according to ASME (North America) is not included (available upon request).

- Piping within the unit

The exhaust gas heat exchanger (available as separate item) is also integrated into the engine circuit. It is possible to retrofit a dump circuit at any time as long as the structural conditions permit.

1.4 Thermal skid unit Heating circuit

The heating circuit of the consumer (2G System 11), also referred to as the secondary circuit, absorbs the heat generated by the system through the plate heat exchanger. The piping is welded according to AD2000 HP100R / DIN EN 13480 and configured according to S235JR (or similar).

The following components are included in the scope of delivery:

- Electric circulating pump
- Electr. three-way mixer to increase the return temperature, controlled by the integrated temperature sensor
- Expansion tank to compensate for pressure fluctuations included in 2G's scope of delivery (shut-off enabled by cap valve)
- 2 x manual shut off valves
- 2 x temperature sensors, 2 x thermometers
- 1 x pressure relief valve
- 1 x dirt trap
- 2 x pressure gauges incl. siphon
- Piping within the unit including prepared connections for warm water, e.g. to preheat the engine or heat the room.

Offer 800-25-005500 dated May 7, 2025

1.5 Heat utilization unitIntercooler circuit

The LT stage of the intercooler circuit is the second cooling stage for the compressed gas/air mixture. Since it requires a lower temperature level, it is not integrated in the engine circuit. If necessary, the heat from the LT stage can be used for gas pre-heating. The piping is welded in accordance with AD2000 HP100R / DIN EN 13480 and carried out in S235JR (or similar).

The following components are included in the scope of delivery:

- Electrical circulating pump
- Electrical three-way mixer for mixture temperature regulation, controlled by integrated temperature sensor
- Expansion tank to compensate for pressure fluctuations included in 2G's scope of delivery (shut-off enabled by capped valve)
- Four manual shut-off valves
- Four thermometers
- Two temperature sensors
- Pressure sensor
- Piping within the unit

Offer 800-25-005500 dated May 7, 2025

1.6 Thermal skid unit Dump circuit

Except for the intercooler radiator (offered as separate item), all other components for an electricity-oriented operation of the 2G system are installed in the thermal skid unit of the dump circuit. The piping is welded according to AD2000 HP100R / DIN EN 13480 and configured according to S235JR (or similar).

The following components are included in the scope of delivery:

- Electrical three-way mixer for dump circuit regulation, controlled by the integrated temperature sensor (installed in the engine cooling circuit)
- 1 x temperature sensor
- 1 x manual shut-off valve
- 1 x pressure relief valve
- Piping within the unit

Engine block heater electrical 480V UL-Compliance (included in climate package)

The heater significantly improves the engine's start-up in cold conditions and allows full-load operation to be reached quickly. In standby mode, a small auxiliary pump is used for engine preheating instead of the engine cooling circuit pump to reduce electric consumption.

1.8 Oil Pre-Lubrication 60 Hz / 480 V (UL-Compliance)

1.9 Grease fitting generator

1.10 Bearing temperature monitoring

1.11 Winding temperature monitoring

Offer 800-25-005500 dated May 7, 2025

1.12 Trace heating

The trace heating starts as soon as the generator is at a standstill. This option is advisable for installations where condensation is to be expected due to ambient conditions. The heating is mounted on the non-drive end of the generator.

1.13 Starter battery - lead gel

2G systems utilize an electric starter and battery system. This also supplies the system with ignition and control current.
Lead gel batteries are easier to transport and leak-resistant. The battery is low-maintenance since it does not require water. Incl. battery casing.

1.14 Dump radiator 65 dB(A) at 10 m (33 ft)

*sound level measured under free field conditions

- Efficient table-type radiator to dissipate excess heat from the engine cooling circuit in times of low thermal demand
- Designed with additional cooling capacity to allow for full electrical output when no thermal demand exists
- Less parasitic load due to large surface areas and low air flow volume
- The VFD, included in the FC control cabinet, enables automatic adjustment of the dump radiator operating parameters based on environmental conditions.

Offer 800-25-005500 dated May 7, 2025

1.15 Intercooler radiator 65 dB(A) at 10 m (33 ft)

Sound level data (average value under free field conditions)

- Efficient radiator to dissipate the heat from the LT stage of the intercooler circuit
- Generous configuration of capacity reserves to ensure the efficiency of mixture cooling and thus the engine (exact configuration data upon request).
- Large exchange surfaces ensure that only a relatively low air flow volume is needed to dissipate the thermal energy. This considerably reduces the unit's energy consumption.
- Supplied frequency converter (e.g. for insertion into FC control cabinet) enables the seamless regulation of the intercooler radiator to optimally adjust the operating conditions to external circumstances.

1.16 Oil supply system Oil pump with distributor manifold

The system ensures the simple and quick exchange of all lubricating oil, significantly reducing downtimes for oil changes.

The offered equipment consists of:
- 1 x lubrication pump
- 1x distributor manifold incl. manual-shut off valves
- Including hose and suction lance

Offer 800-25-005500 dated May 7, 2025

1.17 Oil circulation tank 2x 1500 l (2x 397 gallons)

- Double-walled (PE interior, galvanized steel sheet exterior) with tank content indicator, air vent, filler/drain pipe and overfill protection Without first fill

1.18 Exhaust gas heat exchanger 180°C (356°F)

- Counterflow tube bundle heat exchanger
- Corrosion-resistnat, high alloy stainless steel
- Removable end cover for easy service access
- ASME certified units available on request

1.19 Exhaust silencer 65 dB(A) at 10 m (33 ft)

*sound level measured under free field conditions

The exhaust silencer uses the absorption principle to dampen the sound level. Additional sound attenuation may be achieved by combining multiple silencers or a single project-specific silencer. Refer to the technical drawing for exact specifications.

1.20 Insulation for exhaust gas heat exchanger

Insulated with matting, clad with galvanized sheet-metal jacketing

Offer 800-25-005500 dated May 7, 2025

1.21 Insulation for exhaust gas silencer 65 dB(A) at 10 m (33 ft)

Configured with aluminum laminated mineral wool, cladded with galvanized jacketing

1.22 Connection flanges for machine house installation

Connection flanges supplied for the following interfaces:

- Fuel gas
- Exhaust gas
- Intercooler circuit
- Engine circuit
- Heating circuit
- Dump circuit

A loose flange with rind or a weld neck flange, gaskets and hardware are included with each.

1.23 data interfaces Modbus TCP

Interface to a superordinate control including remote assistance for custom integration. If the interface type is subsequently changed, the technical specification of the 2G must be taken into account and additional costs may be incurred.

1.24 2G POWER PLANT module integrated

The system was developed to further optimize service workflows and increase system availability. At the same time, the 2G POWER PLANT module is required for a 2G Service contract, an option that ensures optimum system availability.
The 2G system sends operating data to IRIS. In case of malfunctions, IRIS automatically triggers a service job (if a Service contract exists). Consequently, a technician may be sent to the system as fast as possible. However, availability of the 2G systems can often be re-established remotely.
Besides informing of existing malfunctions, IRIS provides the Service department with initial potential solutions developed by an intelligent evaluation system. As a result, the technician is optimally prepared for remote access or repairs on site. Potential downtimes are reduced to a minimum. Additionally, the 2G POWER PLANT module is required to integrate the system into the MY2G platform.

MY2G - the digital platform

Offer 800-25-005500 dated May 7, 2025

MY2G is the central platform for smart system management. It combines cutting-edge AI support and custom service options allowing you to personalize your system management. MY2G allows you to access your data, services, and tools anywhere and at any time. Take a first step towards digitally optimized system management - completely free of charge.

IRIS - supported by artificial intelligence:

IRIS, the virtual assistant supported by AI, is available around the clock to provide quick answers and assistance. Improve the performance of your system using customized solutions like IRIS Insight (bookable via the MY2G Store) for AI data analysis, predictive maintenance, and systematic reporting.

The MY2G Store - your system, our solutions:

Find solutions suited to your systems in the MY2G Store. The appropriated solutions are one click away - easily bookable online.

1.25 Gas meter Nm^3 (SCF)

Rotary or turbine gas meters to display the gas volume flow in standard cubic meters, including factory calibration log. The meters are characterized by their high precision and reliability.

Note: Depending on the local legislation, the meter might have to be secured with a thermal shutoff element. The shutoff element can be offered as an option and is generally recommended.

1.26 MID approved heat meter MID approved

Heat meter for vertical or horizontal installation, comprising:

- Flow meter
- Temperature sensor for supply and return
- Immersion sleeves
- Calculator with long-life battery

Remote access Motor control

Equipped with hardware for remote dialling into the engine control.

1.28 Engine preservation Included

Offer 800-25-005500 dated May 7, 2025

1.29 Loading

If item "Transport" included, the cost of charging is included there.

1.30 Number of documentation sets (print) 1

1.31 Language of standard documentation English

1.32.1 Transport

Transport budgetary estimate. Due to current uncertainties in worldwide logistics, 2G will provide final transport costs at date of order. Alternatively 2G is willing to agree on an open book plus 10% handling fee.

1.2 Basic module 60Hz 4,16kV BG

The genset is the main component of the basic module. It also includes direct interfaces for gas, electricity and exhaust gas. An SAE flange connects the four-stroke gas engine and the generator. The transmission of power from the engine's crankshaft to the generator's rotor is achieved by a flexible genset coupling.

The system complies with the following standards:

- Generator in accordance with UL 1004 & UL 1446 (low voltage)
- Generator in accordance with UL 1446 (medium voltage)
- Gas train in accordance with NFPA 37
- Pumps in accordance with UL778 Reuz

Offer 800-25-005500 dated May 7, 2025

The below systems comprise the basic module, configured according to 2G standard. Details are included in the respective drawings and technical documentation. The Factory Acceptance Test and standard documentation (incl. warning labels) are included in the scope of delivery. Medium-voltage generators and custom container options may require different testing options.

Four-stroke gas engine

>> refer to technical data sheet

2G's industrial engine technology is the basis for reliable power. Units are certified for the respective gas type. System design enables various operating modes from peak load and continuous operation to flexible operation with regular start/stop prompts and partial load operation.

Mixture cooling system:
The two-stage mixture cooling system is divided into a high-temperature (HT) circuit and low-temperature (LT) circuit allowing for simple consumer-side usage of the thermal energy produced within the HT circuit.

Engine pre-lubrication:

Engine pre-lubrication using an electric pump ensures long bearing service life even with frequent starts and stops

Generator

>> refer to technical data sheet

The high efficiency synchronous generator ensures optimal energy conversion.
The system design ensures minimal heat loss, leading to the high stated efficiency. The digital voltage regulator facilitates operation through voltage dips in the grid, ensuring compliance with applicable requirements. The generator's coil winding type operates with low harmonic frequencies. The double-bearing generator achieves low friction losses. Costs are reduced by a low-maintenance brushless exciter. Bearing and winding temperature monitors are included as well as anti-condensate heaters. The generator bearings can be equipped with grease fittings.

Note:
For medium-voltage generators, the equipment of the on-site medium-voltage switchgear must be taken from the 2G TA-040.
Special features must be clarified with a project-specific single line.

Offer 800-25-005500 dated May 7, 2025

Gear box:

- Converts engine speed (1500 rpm) to the 60 Hz generator speed (1800 rpm)

Mixture composition

>> refer to technical data sheet

The air/gas ratio is precisely mixed via an actuator adhering to a specific set of characteristics based on key operating parameters. This supports efficient low-emission operation. This system allows omission of common wear parts which increases reliability. The gas supply is ensured by the gas train referenced below.

Combustion air supply:
- Industrial filters ensure adequate combustion air quality
- Design enables an easy filter element change

Gas train

- Maximum inlet gas pressure; refer to the technical data sheet
- Ball valve/shut-off valve for manual interruption of the gas supply
- Gas particulate filter for combustion gas
- Double solenoid gas shut-off valve triggered by gas detection system
- Electrical pressure adjustment valve or zero pressure regulator provides the optimal gas pressure for the gas mixer

Gas mixer

- Industry-standard model to minimize pressure loss
- The gas mixer automatically adjusts the gas-air mixture depending on the energy content and air temperature. The system maintains a homogeneous mixture with various gas types and mixtures.

Operating materials

Lubricating oil:
To ensure optimum performance and maintain warranty, only high-quality lubricants may be used. Approved oils can be found in the engine manufacturer's documentation.
Oil level monitoring and magnetic valves for automatic oil refilling are included. The corresponding peripheral pumps and tank system are available separately.
An oil pump continuously redirects a certain amount of oil into the external tank system (available separately). This option provides a significant oil volume expansion. It increases system availability and reliability.

Coolant:
2G units require water-glycol-based coolants at specified concentrations as per the technical data sheets to guarantee optimal heat dissipation and corrosion protection. Approved oils can be found in the engine manufacturer's documentation.
An electrical engine coolant pre-heating system is included in the standard scope of delivery. The system significantly improves the engine's start-up in cold conditions and allows full-load operation to be reached quickly.

Electronics and software

2G systems comply with the highest standards of modern control technology concerning grid connection and control. 2G uses intelligent hardware and software solutions to enable flexible and reliable modes of operation. The unit is monitored and controlled by a PLC control system, ensuring maximum availability and operational safety. On-site internet connection is required, refer to TA-016 and TA-019 (customer responsibility). Protection relay testing is not included in the scope of delivery. However, if required by the utility, it can be offered separately as part of commissioning.

Electronic hardware:
- Control cabinet incl. touchscreen for system operation and central switch elements (main switch, emergency stop etc.); sheet steel construction in accordance with applicable regulations; wiring tested for functionality
- Module control cabinet (sub-distribution/interface board)

Operation and system software:
- Touchscreen display: The system is operated via an HMI mounted on the control cabinet. Simple schematics and intuitively designed menus provide access to all relevant data and settings.
- System software: Adaptable software solutions enable different modes of operation such as continuous full load and partial load operation as well as flexible modes of operation. Specific thermal and electrical daily load profiles can be applied down to the minute. Demand-driven automatic starts and stops can be programmed. Island mode operation is an available option.
- The 2G POWER PLANT option can streamline maintenance by automatically transmitting all system data and operating messages. This supports increased system availability. Also allows some settings to be modified remotely.
- Authorization levels ensure that fundamental and operation-critical modifications to programming and settings can only be performed by appropriately trained personnel. Operator and service trainings are available in order to gain higher authorization and access levels.
- Continuous data recording enables the visualization of key operating parameters as trend curves.

Offer 800-25-005500 dated May 7, 2025

Note: Internet connection in accordance with TA-016 and TA-019 required (customer responsibility). Alternatives to "DSL" can be offered as an option.

Sensors and monitoring:

- Monitoring & control of engine operation: output and emissions are ensured by a performance map control system. Key operating parameters are evaluated and components (such as gas mixer and throttle valves) are adjusted accordingly.
- Temperature detection for individual cylinders and knocking sensors ensure that even minor irregularities are detected. Corresponding predefined control parameters can trigger an automatic output adjustment, if necessary.
- Ignition system monitoring: detects ignition failures to rule out defective spark plugs or a suboptimal operation. Registers the number of ignition failures in the data storage system and creates a daily report. Malfunctions within the ignition system are displayed and evaluated for individual cylinders and can be analyzed or assessed on site or remotely.
- Control/regulation and monitoring of the auxiliary drives that are included in the scope of delivery
- Gas pressure sensor
- Emergency stop control with safety relay
- Grid monitoring: monitors voltage and frequency for the grid and generator as well as the reserve power and overload

<u>Interfaces:</u>

Design:
The basic module described above is mounted on a robust frame. The design ensures optimal accessibility of all components, facilitating serviceability.

- Modular assembly enables transport, delivery and reassembly of modular components
- Compact design simplifies installation in locations with space constraints
- Integrated sound attenuation elements reduce noise emissions. Engine vibrations are mitigated by frame-mounted vibration dampeners.
- Powder-coated frame ensures permanent anti-corrosion protection

Gas & water interfaces:
The following flanged gas & water connection points are integrated:

- Gas connection (expansion joint included, not installed)
- Exhaust tract connection for downstream heat recovery (expansion joint included, not installed)
- Expansion joints for mixture cooling and heat dump circuit (if they are included in the scope of delivery) included, not installed

Offer 800-25-005500 dated May 7, 2025

Electrical connections / customer or utility interface:
Grid connection must be provided by the customer.

Data interfaces:
Module control is available in various communication interfaces.

- Various software interfaces (optional)
- Interfaces for hardware signals (digital/analog) (optional)

Offer 800-25-005500 dated May 7, 2025

Delivery Conditions:	DDP (Only valid in conjunction with the corresponding range of services) Incoterms ® 2020
Delivery Period:	Approximately 42 weeks EXW after technical and commercial clarifications.
Price valid until:	Jun 7, 2025
Terms of Payment:	Payments are due upon notification at each payment event and payments are to be made through wire transfer. Dates are only valid under the precondition that all payments have been paid on time.
Warranty:	2G Energy Inc. Limited Warranty

Commercial Terms:

Down Payment with the Purchase Order 35%.

Upon notice of Ready to Ship 65%.

Contract Price (excluding cold install, commissioning, and 100-hour Maintenance).

The Contract Price for the agreed scope of supply is a fixed net price. Therefore, changes to the scope of supply will result in a change order.

Offer 800-25-005500 dated May 7, 2025

The "2G Offer Conditions" are jointly applicable

With the signature of the order form on the last page of this quotation the signatory confirms his/her understanding and approval of the fact that all delivered goods as well as their individual components are not to be used for any other purposes than their originally intended purpose.

Acceptance after commissioning: If the acceptance is delayed for more than 60 days after the notification of delivery readiness for reasons that are outside the seller's control, the system is deemed to have been accepted.

Any changes to the quotation's scope of services and supply require written change order that is agreed to by both parties to be valid.

Best regards,

Jon Going
2G Energy Inc.

Offer 800-25-005500 dated May 7, 2025

Order conditions

Warranty

Please refer to this link for the details and Limited Warranty
2G Energy Inc Limited Warranty

This offer is based on the standard T&C´s, the details are found here:
2G Energy Inc General Terms and Conditions for the Sale of Goods

A separate proposal and contract will be used for all items/events post "Ready to Ship" (cold install, commissioning, training, first 100-hour service).

Unloading

Unloading, moving of equipment to the point of installation, mounting and adjustment of delivered equipment on intended foundations is not included in 2G Energy's scope of supply. Rigging equipment, crane, lifting equipment, etc., to be provided by the Client.

Exclusions

- All works and delivers which are not specified
- All permits, approvals, etc., of any kind
- All costs associated with the Local Utility
- Transformers for utility connection
- Mechanical material or connections outside the stated scope of supply
- Gas utility meter or other upgrades
- Engineering Services: Mechanical, Electrical or Civil
- All fuel and other consumables including but not limited to fluids such as engine oil, lube oil, gear box oil and urea
- Transfer Trip
- Excavation, Remediation
- Power metering
- SCADA
- Utility Interface Protection (UIP) /Grid Protection Relay
- Site preparation
- Mechanical material or connections past 2G scope of supply
- All parts and components not specified
- Foundation
- External Gas Pipes that will be connected to the CHP
- External Water Pipes that will be connected to the CHP
- External cables and wiring that will be connected to the CHP
- Local labour support
- Emission, noise, or other third-party testing or thrid-party inspection (such as EPA/ local air board, utility testing, noise testing, TSSA, UL2200, etc)
- Cold installation of Equipment, Commissioning, Operator Training, First maintenance event that occurs at approximately 100 operating hours
- *2G excludes any Electic Utility required testing related to IEEE 1547 such as IEEE 1547.1, UL 1741 SA and UL 1741 SB or the development of the test plan for these testing standards. 2G*

can support the onsite testing as part of it and as required at an additional cost based on the scope determined by the test plan

Storage and Waste Disposal
The Client is responsible for waste disposal and secure and appropriate storage of all delivered equipment.

Start-up and Commissioning
The Buyer shall provide to the Seller 6 to 8 weeks in advance a completed pre-commissioning checklist confirming that the installation has been finalized according to Seller's Technical Instructions and that all site facilities necessary for plant operation are ready for continuous and uninterrupted operation in mains parallel or in island mode with connected loads and or customer supplied load bank. Confirmation between the customer and the assigned 2G Project Manager is to be confirmed before scheduling commissioning and start-up.

"**Notice of Ready to Ship**": means the written notice issued by the Seller to the Buyer certifying that the Goods have been fully manufactured and are ready to leave the factory.
"**Commissioning**": means the moment when the performance tests criteria have been satisfied, per the performance test report.

Termination
Buyer may terminate this Terms and Conditions at any time upon written notice to Seller and payment of termination charges per the schedule set forth below:

No. of Days after *purchase order confirmation is signed by both parties*	**Termination charge as percentage of the contract price**
less than 30 days	30%
31-60 days	50%
61 + days	100%

Title to the Equipment and any work in progress shall remain with Seller in the event Buyer elects to terminate this Terms and Conditions pursuant to this provision.

Delivery
Any delivery dates are valid under the condition that all payments have been paid in time and all commercial and technical details are verified according to the project management submittals timeline below. Typical transportation time from Heek, Germany factory to the site for a new unit is 3-5 weeks. - The access roads to the site and the location of the crane must be prepared by the customer (in accordance with TA-005 Transport).

Project Management/Submittals:
- Internal Kickoff Meeting within 10 business days after PO and Down Payment will occur internally between 2G Sales and Project Management

- Customer Kickoff Meeting within 4 weeks of PO and Down Payment
- Preliminary Submittal drawings within 6 weeks of PO and Down Payment to include: SLD, P&ID, General Arrangement for layout and tie-in points, and communications network drawing.
- Changes in the technical specification and/or a change of the Scope of Supply after the PO and Down Payment has been received can result in a change order and delays of the Preliminary Submittals Drawings and/or delivery of the Scope of Supply
- **Customer turn around for information submitted by 2G is within 10 business days to avoid excusable delays**
- After approximately 12 weeks, final drawings will be completed and assembled into a PDF Project Submittal, providing all necessary information to finalize construction and CHP installation and integration. At this time, it would be appropriate for the customer, distributor or engineer of record should be required to sign-off on the layout drawing, P&ID and electrical single-line drawing. This allows for a clear scope of supply as the project transitions to the production phase.
- 2 weeks after the Ready to Ship Notification, as-built drawings together with electrical diagrams will be provided
- 2 months after commissioning as-commissioned drawings will be provided.

COUNTRY-SPECIFIC REGULATIONS

The country-specific regulations regarding installation and acceptance must be observed by the customer. Further acceptance documentation is not part of the contract and is therefore excluded.

In the event that DDP has been offered and there is a legal change in taxes and/or import duties between sale and delivery to the country of destination, 2G reserves the right to adjust these accordingly at a later date.

Additional Contractual Documents

This Offer is based on the following documents:

- Sales Drawing to include P&ID, General Arrangement, Single Line Drawing, Generator Data Sheet, Engine Technical Data.
- Agreed Terms and Conditions.
- Limited Warranty. Fuel Gas Quality/ Fluids (ANNEX).
- Parameters for installation from the OEM (ANNEX).
- General Conditions Operating and Maintenance (ANNEX).
- Form of Installation Checklist (ANNEX).
- Form of Equipment Acceptance Report (ANNEX)

Items labelled ANNEX are available upon request and are integral to the Offer. In the event of any conflict between the terms of the Offer and the ANNEXES, the terms and conditions of the Offer shall prevail. The provisions of the remaining Contract Documents listed above shall prevail in the order listed above.

Offer 800-25-005500 dated May 7, 2025

Note:
Rounded values for measurements in imperial units.

Offer 800-25-005500 dated May 7, 2025

Order form for the offer 800-25-005500

Sales contact:	Email:	Telephone:	Heek, May 7, 2025
Jon Going	j.going@2-g.com		

Your reference:

Madison WWTP

The offer is accepted, the order is placed.

_____	_____
Date Carollo Engineers	Date 2G Energy Inc.

Please send the signed order form back to us by mail.

APPENDIX 4C

NET PRESENT VALUE ESTIMATES

Null Pathway O&M

Performance Inputs	Engine 1	Engine 2	Engine Blower	
1 kWh to Btu conversion	3,412.14	3,412.14	3,412.14	
Engine fuel input, LHV, 100% load (million Btu/hr)	7.35	7.35	7.35	Waukesha cut sheet for L7042G Engine
Engine electrical output, 100% load, (kW)	475	475	475.00	Per TM2
Engine electrical equivalent output, 100% load, million Btu/hr)	1.621	1.621	1.621	
Engine electrical efficiency, 100% load (%)	22.1%	22.1%	22.1%	
Engine thermal output, 100% load (million Btu/hr)	2.000	2.000	1.6	Per TM2
Engine thermal efficiency, 100% load (%)	27.2%	27.2%	21.8%	
Engine uptime	90%	90%	90%	Updated per Darrell's input (reduced from 95%)
Boiler efficiency	100%	100%	100%	Updated per Strand's input
Engine parasitic load, % of capacity	3.39%	3.39%	3.39%	Updated per Darrell's formula (reduce COGEN % values by 20%)
Gas Conditoning Electrical Parasitic Run Load (kW)	60.00	60.00	60.00	Updated per Darrell's input (60 kW for entire system of 3 engines)
Actual Boiler efficiency	80%	80%	80%	Per Darrell

O&M/Revenue & Life-cycle Cost Inputs		
O&M cost inputs		
Additional O&M labor, hrs/day		
Engine generator rebuilds (annualized) ($/yr)	$60,675	
Life-cycle cost inputs		
2025 Project Cost	$552,000	From "Null Capital" tab
Escalation rate	3.5%	
Interest rate	2.5%	
Present Value (PV) year	2028	
Biogas LHV (Btu/scf)	588	
Maximum capacity of the exisitng system (scfm)	630	

Equipment	% of total biogas (w/o flare)	Engine electrical output, 100% load, (kW)	Engine thermal output, 100% load, (MMBtu/hr)	
Engine 1	29.90%	475	2	Per TM2
Engine 2	30.10%	475	2	Per TM2
West Boilers (total 3)	12.00%		13.2	Per TM2
East Boilers (total 3)			26.4	Per TM2
Engine Blower	15.00%	475	1.6	Per TM2
Steam Boilers (total 4)	7.00%			
Flare	6.00%			
	100.00%			

Annual Performance, O&M Costs, Revenue, and Life-Cycle Costs

Year	Average/Sum	2025	2026	2027	2028	2029	2030	2031	2032	2033	2034	2035	2036
Operation Data, Instantaneous													
Biogas (scfm)		602.99	609.48	615.98	622.47	628.96	635.45	641.95	648.44	654.93	661.42	667.92	674.41
Biogas to engines (scfm)		602.99	609.48	615.98	622.47	628.96	630.00	630.00	630.00	630.00	630.00	630.00	630.00
Biogas energy, LHV (million Btu/hr)		21.28	21.50	21.73	21.96	22.19	22.23	22.23	22.23	22.23	22.23	22.23	22.23
Biogas energy to engine 1, LHV (million Btu/hr)		6.36	6.43	6.50	6.57	6.64	6.65	6.65	6.65	6.65	6.65	6.65	6.65
Biogas to engine 1, LHV (million Btu/hr)		6.36	6.43	6.50	6.57	6.64	6.65	6.65	6.65	6.65	6.65	6.65	6.65
Engine 1 electrical output (kW)		411	416	420	424	429	430	430	430	430	430	430	430
Engine load (%)		87%	87%	88%	89%	90%	90%	90%	90%	90%	90%	90%	90%
Biogas engine to engine 2, LHV (million Btu/hr)		6.40	6.47	6.54	6.61	6.68	6.69	6.69	6.69	6.69	6.69	6.69	6.69
Biogas to engine 2, LHV (million Btu/hr)		6.40	6.47	6.54	6.61	6.68	6.69	6.69	6.69	6.69	6.69	6.69	6.69
Engine 2 electrical output (kW)		413.85	418.31	422.76	427.22	431.67	432.39	432.39	432.39	432.39	432.39	432.39	432.39
Engine load (%)		87%	88%	89%	90%	91%	91%	91%	91%	91%	91%	91%	91%
Biogas energy to Engine Blower, LHV (million BTU)		3.19	3.23	3.26	3.29	3.33	3.33	3.33	3.33	3.33	3.33	3.33	3.33
Biogas to Engine Blower, LHV (million BTU)		3.19	3.23	3.26	3.29	3.33	3.33	3.33	3.33	3.33	3.33	3.33	3.33
Engine Blower electrical output (kW)		206.24	208.46	210.68	212.90	215.12	215.47	215.47	215.47	215.47	215.47	215.47	215.47
Engine load (%)		43%	44%	44%	45%	45%	45%	45%	45%	45%	45%	45%	45%
Engine thermal output (million Btu/hr)		4.17	4.21	4.26	4.30	4.35	4.35	4.35	4.35	4.35	4.35	4.35	4.35
Hot water heat demand (million Btu/hr)		9.13	9.13	9.13	9.13	9.13	9.13	9.13	9.13	9.13	9.13	9.13	9.13
Additional heat needed from HW boilers (million Btu/hr)		4.96	4.92	4.87	4.83	4.78	4.78	4.78	4.78	4.78	4.78	4.78	4.78
HW Heat demand supplied with biogas by boilers (million Btu/hr)		2.04	2.06	2.09	2.11	2.13	2.13	2.13	2.13	2.13	2.13	2.13	2.13
Natural gas use in HW boilers (million Btu/hr)		2.92	2.85	2.79	2.72	2.65	2.64	2.64	2.64	2.64	2.64	2.64	2.64
Natural gas use in HW boilers (million Btu/yr)		25,574.23	24,988.46	24,402.70	23,816.93	23,231.17	23,137.47	23,137.47	23,137.47	23,137.47	23,137.47	23,137.47	23,137.47
Steam heat demand (million Btu/hr)		4.43	4.43	4.43	4.43	4.43	4.43	4.43	4.43	4.43	4.43	4.43	4.43
Steam Heat demand supplied with biogas in boilers (million Btu/hr)		1.19	1.20	1.22	1.23	1.24	1.24	1.24	1.24	1.24	1.24	1.24	1.24
Natural gas use in steam boilers (million Btu/hr)		3.24	3.23	3.21	3.20	3.19	3.19	3.19	3.19	3.19	3.19	3.19	3.19
Natural gas use in steam boilers (million Btu/yr)		28,370.13	28,257.76	28,145.39	28,033.02	27,920.65	27,902.68	27,902.68	27,902.68	27,902.68	27,902.68	27,902.68	27,902.68
Natural gas use in HW boilers (million Btu/yr)		53,944.35	53,246.22	52,548.09	51,849.95	51,151.82	51,040.15	51,040.15	51,040.15	51,040.15	51,040.15	51,040.15	51,040.15
Operation Data, Accounting for Engine Uptime													
Engine operating hours (hrs/yr)		7,884	7,884	7,884	7,884	7,884	7,884	7,884	7,884	7,884	7,884	7,884	7,884
Biogas to engine (scfm)		502	508	513	519	524	525	525	525	525	525	525	525
Biogas to engine, LHV (million Btu/yr)		125,799	127,154	128,508	129,863	131,217	131,434	131,434	131,434	131,434	131,434	131,434	131,434
Engine electrical output (kW/yr)		8,129,878	8,217,411	8,304,944	8,392,477	8,480,010	8,494,011	8,494,011	8,494,011	8,494,011	8,494,011	8,494,011	8,494,011
Engine parasitic load (kW/yr)		380,324	380,324	380,324	380,324	380,324	380,324	380,324	380,324	380,324	380,324	380,324	380,324
Gas conditioning parasitic load (kW/yr)		473,040	473,040	473,040	473,040	473,040	473,040	473,040	473,040	473,040	473,040	473,040	473,040
Net power generation (kW/yr)		7,276,514	7,364,047	7,451,580	7,539,113	7,626,646	7,640,647	7,640,647	7,640,647	7,640,647	7,640,647	7,640,647	7,640,647
Natural Gas Consumption													
Natural gas use during engine uptime (million Btu/hr)		6.16	6.08	6.00	5.92	5.84	5.83	5.83	5.83	5.83	5.83	5.83	5.83
Natural gas use during engine downtime (million Btu/hr)		13.56	13.56	13.56	13.56	13.56	13.56	13.56	13.56	13.56	13.56	13.56	13.56
Average natural gas use (million Btu/hr)		6.90	6.83	6.75	6.68	6.61	6.60	6.60	6.60	6.60	6.60	6.60	6.60
Average natural gas use (million Btu/yr)		60,428	59,800	59,172	58,544	57,915	57,815	57,815	57,815	57,815	57,815	57,815	57,815
Annual O&M Costs/(Revenue)	*Costs shown as positive values. Revenue or savings shown as negative values.*												
Annual O&M Costs													
Natural gas cost for process and building heat ($/yr)						$375,635	$388,108	$401,692	$415,751	$430,302	$445,363	$460,950	$477,084
Engine generator rebuilds (annualized) ($/yr)						$69,626	$72,063	$74,585	$77,196	$79,897	$82,694	$85,588	$88,584
Cogeneration and gas conditioning system O&M, $/yr						$125,521.80	$129,915.07	$134,462.09	$139,168.27	$144,039.16	$149,080.53	$154,298.35	$159,698.79
Gas conditioning media replacement ($/yr)						$52,595	$54,436	$56,341	$58,313	$80,354	$62,466	$64,652	$66,915
Total O&M Costs ($/yr)						**$623,378**	**$644,521**	**$667,080**	**$690,428**	**$714,592**	**$739,603**	**$765,489**	**$792,281**
Annual Savings													
Power savings ($/yr)						($1,005,445)	($1,042,546)	($1,079,035)	($1,116,801)	($1,155,889)	($1,196,345)	($1,238,218)	($1,281,555)
Total Savings ($/yr)						**($1,005,445)**	**($1,042,546)**	**($1,079,035)**	**($1,116,801)**	**($1,155,889)**	**($1,196,345)**	**($1,238,218)**	**($1,281,555)**
Net Annual Costs ($/yr)						**($382,067)**	**($398,024)**	**($411,955)**	**($426,374)**	**($441,297)**	**($456,742)**	**($472,728)**	**($489,274)**
Present Value of O&M Cost and Revenue (2029 $)	*Costs shown as positive values. Revenue or savings shown as negative values.*												
Annual O&M Costs													
Natural gas cost for process and building heat ($/yr)	$406,000					$366,474	$369,407	$373,011	$376,650	$380,324	$384,035	$387,782	$391,565
Engine generator rebuilds (annualized) ($/yr)	$75,000					$67,928	$68,590	$69,260	$69,935	$70,618	$71,307	$72,002	$72,705
Cogeneration and gas conditioning system O&M, $/yr	$136,000					$122,460	$123,655	$124,861	$126,080	$127,310	$128,552	$129,806	$131,072
Gas conditioning media replacement ($/yr)	$57,000					$51,312	$51,813	$52,318	$52,829	$53,344	$53,864	$54,390	$54,920
Total O&M Costs ($/yr)	**$674,000**					**$608,174**	**$613,465**	**$619,450**	**$625,493**	**$631,596**	**$637,758**	**$643,980**	**$650,262**
Annual Savings													
Power savings ($/yr)	**($1,090,000)**					($980,922)	($992,310)	($1,001,991)	($1,011,767)	($1,021,638)	($1,031,605)	($1,041,669)	($1,051,832)
Total Savings ($/yr)	**($1,090,000)**					**($980,922)**	**($992,310)**	**($1,001,991)**	**($1,011,767)**	**($1,021,638)**	**($1,031,605)**	**($1,041,669)**	**($1,051,832)**
Net Annual Costs ($/yr)	**($416,000)**					**($372,748)**	**($378,845)**	**($382,541)**	**($386,274)**	**($390,042)**	**($393,847)**	**($397,690)**	**($401,570)**
PV of Net Annual Costs	**($416,000)**												
Net Present Value (NPV) and Payback Period (2028 $)													
PV of Project Cost					$612,012								
PV of Net O&M Costs					$0	($372,748)	($378,845)	($382,541)	($386,274)	($390,042)	($393,847)	($397,690)	($401,570)
Total NPV - "Cash Flow"					$612,012	$239,264	($139,581)	($522,123)	($908,397)	($1,298,439)	($1,692,286)	($2,089,976)	($2,491,546)
Total NPV (2028 $)	**($7,627,170)**												
Payback period (yrs):	1.47												
					($612,012)	($239,264)	$139,581	$522,123	$908,397	$1,298,439	$1,692,286	$2,089,976	$2,491,546

Year	2037	2038	2039	2040	2041	2042	2043	2044	2045	2046	2047	2048
Operation Data, Instantaneous												
Biogas (scfm)	680.90	687.39	693.88	700.38	706.87	713.36	719.85	726.35	732.84	739.33	745.82	752.32
Biogas to engines (scfm)	630.00	630.00	630.00	630.00	630.00	630.00	630.00	630.00	630.00	630.00	630.00	630.00
Biogas energy, LHV (million Btu/hr)	22.23	22.23	22.23	22.23	22.23	22.23	22.23	22.23	22.23	22.23	22.23	22.23
Biogas energy to engine 1, LHV (million Btu/hr)	6.65	6.65	6.65	6.65	6.65	6.65	6.65	6.65	6.65	6.65	6.65	6.65
Biogas to engine 1, LHV (million Btu/hr)	6.65	6.65	6.65	6.65	6.65	6.65	6.65	6.65	6.65	6.65	6.65	6.65
Engine 1 electrical output (kW)	430	430	430	430	430	430	430	430	430	430	430	430
Engine load (%)	90%	90%	90%	90%	90%	90%	90%	90%	90%	90%	90%	90%
Biogas engine to engine 2, LHV (million Btu/hr)	6.69	6.69	6.69	6.69	6.69	6.69	6.69	6.69	6.69	6.69	6.69	6.69
Biogas to engine 2, LHV (million Btu/hr)	6.69	6.69	6.69	6.69	6.69	6.69	6.69	6.69	6.69	6.69	6.69	6.69
Engine 2 electrical output (kW)	432.39	432.39	432.39	432.39	432.39	432.39	432.39	432.39	432.39	432.39	432.39	432.39
Engine load (%)	91%	91%	91%	91%	91%	91%	91%	91%	91%	91%	91%	91%
Biogas energy to Engine Blower, LHV (million BTU)	3.33	3.33	3.33	3.33	3.33	3.33	3.33	3.33	3.33	3.33	3.33	3.33
Biogas to Engine Blower, LHV (million BTU)	3.33	3.33	3.33	3.33	3.33	3.33	3.33	3.33	3.33	3.33	3.33	3.33
Engine Blower electrical output (kW)	215.47	215.47	215.47	215.47	215.47	215.47	215.47	215.47	215.47	215.47	215.47	215.47
Engine load (%)	45%	45%	45%	45%	45%	45%	45%	45%	45%	45%	45%	45%
Engine thermal output (million Btu/hr)	4.35	4.35	4.35	4.35	4.35	4.35	4.35	4.35	4.35	4.35	4.35	4.35
Hot water heat demand (million Btu/hr)	9.13	9.13	9.13	9.13	9.13	9.13	9.13	9.13	9.13	9.13	9.13	9.13
Additional heat needed from HW boilers (million Btu/hr)	4.78	4.78	4.78	4.78	4.78	4.78	4.78	4.78	4.78	4.78	4.78	4.78
HW Heat demand supplied with biogas by boilers (million Btu/hr)	2.13	2.13	2.13	2.13	2.13	2.13	2.13	2.13	2.13	2.13	2.13	2.13
Natural gas use in HW boilers (million Btu/hr)	2.64	2.64	2.64	2.64	2.64	2.64	2.64	2.64	2.64	2.64	2.64	2.64
Natural gas use in HW boilers (million Btu/yr)	23,137.47	23,137.47	23,137.47	23,137.47	23,137.47	23,137.47	23,137.47	23,137.47	23,137.47	23,137.47	23,137.47	23,137.47
Steam heat demand (million Btu/hr)	4.43	4.43	4.43	4.43	4.43	4.43	4.43	4.43	4.43	4.43	4.43	4.43
Steam Heat demand supplied with biogas in boilers (million Btu/hr)	1.24	1.24	1.24	1.24	1.24	1.24	1.24	1.24	1.24	1.24	1.24	1.24
Natural gas use in steam boilers (million Btu/hr)	3.19	3.19	3.19	3.19	3.19	3.19	3.19	3.19	3.19	3.19	3.19	3.19
Natural gas use in steam boilers (million Btu/yr)	27,902.68	27,902.68	27,902.68	27,902.68	27,902.68	27,902.68	27,902.68	27,902.68	27,902.68	27,902.68	27,902.68	27,902.68
Natural gas use in HW boilers (million Btu/yr)	51,040.15	51,040.15	51,040.15	51,040.15	51,040.15	51,040.15	51,040.15	51,040.15	51,040.15	51,040.15	51,040.15	51,040.15
Operation Data, Accounting for Engine Uptime												
Engine operating hours (hrs/yr)	7,884	7,884	7,884	7,884	7,884	7,884	7,884	7,884	7,884	7,884	7,884	7,884
Biogas to engine (scfm)	525	525	525	525	525	525	525	525	525	525	525	525
Biogas to engine, LHV (million Btu/yr)	131,434	131,434	131,434	131,434	131,434	131,434	131,434	131,434	131,434	131,434	131,434	131,434
Engine electrical output (kW/yr)	8,494,011	8,494,011	8,494,011	8,494,011	8,494,011	8,494,011	8,494,011	8,494,011	8,494,011	8,494,011	8,494,011	8,494,011
Engine parasitic load (kW/yr)	380,324	380,324	380,324	380,324	380,324	380,324	380,324	380,324	380,324	380,324	380,324	380,324
Gas conditioning parasitic load (kW/yr)	473,040	473,040	473,040	473,040	473,040	473,040	473,040	473,040	473,040	473,040	473,040	473,040
Net power generation (kW/yr)	7,640,647	7,640,647	7,640,647	7,640,647	7,640,647	7,640,647	7,640,647	7,640,647	7,640,647	7,640,647	7,640,647	7,640,647
Natural Gas Consumption												
Natural gas use during engine uptime (million Btu/hr)	5.83	5.83	5.83	5.83	5.83	5.83	5.83	5.83	5.83	5.83	5.83	5.83
Natural gas use during engine downtime (million Btu/hr)	13.56	13.56	13.56	13.56	13.56	13.56	13.56	13.56	13.56	13.56	13.56	13.56
Average natural gas use (million Btu/hr)	6.60	6.60	6.60	6.60	6.60	6.60	6.60	6.60	6.60	6.60	6.60	6.60
Average natural gas use (million Btu/yr)	57,815	57,815	57,815	57,815	57,815	57,815	57,815	57,815	57,815	57,815	57,815	57,815
Annual O&M Costs/(Revenue)												
Annual O&M Costs												
Natural gas cost for process and building heat ($/yr)	$493,782	$511,064	$528,951	$547,465	$566,626	$586,458	$606,984	$628,228	$650,216	$672,974	$696,528	$720,906
Engine generator rebuilds (annualized) ($/yr)	$91,684	$94,893	$98,214	$101,652	$105,210	$108,892	$112,703	$116,648	$120,730	$124,956	$129,329	$133,856
Cogeneration and gas conditioning system O&M, $/yr	$165,288.25	$171,073.33	$177,060.90	$183,258.03	$189,672.06	$196,310.59	$203,181.46	$210,292.81	$217,653.05	$225,270.91	$233,155.39	$241,315.83
Gas conditioning media replacement ($/yr)	$69,257	$71,681	$74,190	$76,787	$79,474	$82,256	$85,135	$88,115	$91,199	$94,391	$97,694	$101,114
Total O&M Costs ($/yr)	**$820,011**	**$848,712**	**$878,417**	**$909,161**	**$940,982**	**$973,916**	**$1,008,003**	**$1,043,283**	**$1,079,798**	**$1,117,591**	**$1,156,707**	**$1,197,192**
Annual Savings												
Power savings ($/yr)	($1,326,410)	($1,372,834)	($1,420,883)	($1,470,614)	($1,522,086)	($1,575,359)	($1,630,496)	($1,687,563)	($1,746,628)	($1,807,760)	($1,871,032)	($1,936,518)
Total Savings ($/yr)	**($1,326,410)**	**($1,372,834)**	**($1,420,883)**	**($1,470,614)**	**($1,522,086)**	**($1,575,359)**	**($1,630,496)**	**($1,687,563)**	**($1,746,628)**	**($1,807,760)**	**($1,871,032)**	**($1,936,518)**
Net Annual Costs ($/yr)	**($506,398)**	**($524,122)**	**($542,466)**	**($561,453)**	**($581,104)**	**($601,442)**	**($622,493)**	**($644,280)**	**($666,830)**	**($690,169)**	**($714,325)**	**($739,326)**
Present Value of O&M Cost and Revenue (2029 $)												
Annual O&M Costs												
Natural gas cost for process and building heat ($/yr)	$395,385	$399,242	$403,137	$407,070	$411,042	$415,052	$419,101	$423,190	$427,319	$431,488	$435,697	$439,948
Engine generator rebuilds (annualized) ($/yr)	$73,414	$74,130	$74,854	$75,584	$76,321	$77,066	$77,818	$78,577	$79,343	$80,118	$80,899	$81,688
Cogeneration and gas conditioning system O&M, $/yr	$132,351	$133,642	$134,946	$136,263	$137,592	$138,934	$140,290	$141,658	$143,041	$144,436	$145,845	$147,268
Gas conditioning media replacement ($/yr)	$55,456	$55,997	$56,544	$57,095	$57,652	$58,215	$58,783	$59,356	$59,935	$60,520	$61,110	$61,707
Total O&M Costs ($/yr)	**$656,606**	**$663,012**	**$669,481**	**$676,012**	**$682,607**	**$689,267**	**$695,992**	**$702,782**	**$709,638**	**$716,561**	**$723,552**	**$730,611**
Annual Savings												
Power savings ($/yr)	($1,062,094)	($1,072,456)	($1,082,919)	($1,093,484)	($1,104,152)	($1,114,924)	($1,125,801)	($1,136,785)	($1,147,875)	($1,159,074)	($1,170,382)	($1,181,801)
Total Savings ($/yr)	**($1,062,094)**	**($1,072,456)**	**($1,082,919)**	**($1,093,484)**	**($1,104,152)**	**($1,114,924)**	**($1,125,801)**	**($1,136,785)**	**($1,147,875)**	**($1,159,074)**	**($1,170,382)**	**($1,181,801)**
Net Annual Costs ($/yr)	**($405,487)**	**($409,443)**	**($413,438)**	**($417,472)**	**($421,544)**	**($425,657)**	**($429,810)**	**($434,003)**	**($438,237)**	**($442,513)**	**($446,830)**	**($451,189)**
PV of Net Annual Costs												
Net Present Value (NPV) and Payback Period (2028 $)												
PV of Project Cost												
PV of Net O&M Costs	($405,487)	($409,443)	($413,438)	($417,472)	($421,544)	($425,657)	($429,810)	($434,003)	($438,237)	($442,513)	($446,830)	($451,189)
Total NPV - "Cash Flow"	($2,897,033)	($3,306,476)	($3,719,914)	($4,137,386)	($4,558,930)	($4,984,587)	($5,414,397)	($5,848,400)	($6,286,638)	($6,729,150)	($7,175,980)	($7,627,170)
Total NPV (2028 $)												
Payback period (yrs):												
	$2,897,033	$3,306,476	$3,719,914	$4,137,386	$4,558,930	$4,984,587	$5,414,397	$5,848,400	$6,286,638	$6,729,150	$7,175,980	$7,627,170

Pathway 1: Biogas Conditioning and Cogen O&M

Performance Inputs	1 Engine		2 Engines	
1 kWh to Btu conversion	3,412.14			
Engine fuel input, LHV, 100% load (million Btu/hr)	11.82		23.64	2G Avus 1200E
Engine electrical output, 100% load, (kW)	1,503		3,006.8	
Engine electrical output, 100% load, million Btu/hr)	5.130		10.260	
Engine electrical efficiency, 100% load (%)	43.4%			2G Avus 1200E
Engine thermal output, 100% load (million Btu/hr)	5.520		11.040	2G Avus 1200E
Engine thermal efficiency, 100% load (%)	46.7%			
Engine uptime	95%			Updated per Darrell's input
Boiler efficiency	100%			Updated per Strand's input
Engine parasitic load, % of capacity	2.34%		70	Input from 2G quote, 2nd value in kW
Gas Conditoning Electrical Parasitic Run Load (kW)	70.0			Unison quote

O&M/Revenue & Life-cycle Cost Inputs		
O&M cost inputs		
Additional O&M labor, hrs/day		
Engine generator rebuild cost ($/yr)	$150,000	Link: O and M Costs
Life-cycle cost inputs		
2025 Project Cost	$26,614,000	From 'COGEN Capital' tab
Escalation rate	3.5%	
Interest rate	2.5%	
Present Value (PV) year	2028	
Biogas LHV (Btu/scf)	588	
Average heat used from cogen during warm periods, MMBH	2.48	Per Strand calculations, includes only digesters and struvite dryers, assumes
% of year using full cogen heat	56%	Per Strand, calculated based in BIN h
% of year using partial cogen heat	44%	Per Strand, calculated based in BIN h

Annual Performance, O&M Costs, Revenue, and Life-Cycle Costs

Year	Average/Sum	2025	2026	2027	2028	2029	2030	2031	2032	2033	2034	2035	2036
Operation Data, Instantaneous													
Biogas (scfm)					622.5	629.0	635.5	641.9	648.4	654.9	661.4	667.9	674.4
Biogas energy, LHV (million Btu/hr)					21.96	22.19	22.42	22.65	22.88	23.11	23.34	23.57	23.79
Biogas to engine, LHV (million Btu/hr)					21.96	22.19	22.42	22.65	22.88	23.11	23.34	23.57	23.64
Engine electrical output (kW)					2793.4	2822.6	2851.7	2880.8	2910.0	2939.1	2968.2	2997.4	3006.8
Engine load (%)					92.9%	93.9%	94.8%	95.8%	96.8%	97.7%	98.7%	99.7%	100%
Engine thermal output, average, (million Btu/hr)					6.83	6.89	6.95	7.01	7.07	7.13	7.19	7.25	7.27
Natural Gas													
Hot water heat demand (million Btu/hr)					9.13	9.13	9.13	9.13	9.13	9.13	9.13	9.13	9.13
Hot water heat demand supplied by NG (million Btu/hr)					2.30	2.24	2.18	2.12	2.06	2.00	1.94	1.88	1.86
Natural gas use in HW boilers, LHV (million Btu/hr)					2.30	2.24	2.18	2.12	2.06	2.00	1.94	1.88	1.86
Natural gas use in HW boilers, LHV (million Btu/yr)					20,106	19,581	19,056	18,531	18,007	17,482	16,957	16,432	16,262
Steam heat demand (million Btu/hr)					4.43	4.43	4.43	4.43	4.43	4.43	4.43	4.43	4.43
Natural gas use in steam boilers, LHV (million Btu/hr)					4.43	4.43	4.43	4.43	4.43	4.43	4.43	4.43	4.43
Natural gas use in steam boilers, LHV (million Btu/yr)					38,807	38,807	38,807	38,807	38,807	38,807	38,807	38,807	38,807
Operation Data, Accounting for Engine Uptime													
Engine operating hours (hrs/yr)					8,322	8,322	8,322	8,322	8,322	8,322	8,322	8,322	8,322
Biogas to engine (scfm)					591	598	604	610	616	622	628	635	637
Biogas to engine, LHV (million Btu/yr)					182,769	184,676	186,582	188,488	190,395	192,301	194,207	196,113	196,732
Engine electrical output (kW/yr)					23,246,983	23,489,448	23,731,912	23,974,376	24,216,841	24,459,305	24,701,769	24,944,234	25,022,925
Excess biogas to flare, LHV (million Btu/yr)					9,619	9,720	9,820	9,920	10,021	10,121	10,221	10,322	11,710
Biogas utilization (%)					95%	95%	95%	95%	95%	95%	95%	95%	94%
Engine parasitic load (kW/yr)					585,037	585,037	585,037	585,037	585,037	585,037	585,037	585,037	585,037
Gas conditioning parasitic load (kW/yr)					582,540	582,540	582,540	582,540	582,540	582,540	582,540	582,540	582,540
Net power generation (kW/yr)					22,079,407	22,321,871	22,564,335	22,806,800	23,049,264	23,291,728	23,534,193	23,776,657	23,855,348
Natural Gas Consumption													
Natural gas use for steam (million Btu/hr)					4.43	4.43	4.43	4.43	4.43	4.43	4.43	4.43	4.43
Natural gas use for steam (million Btu/yr)					38,807	38,807	38,807	38,807	38,807	38,807	38,807	38,807	38,807
Natural gas use for hot water during engine uptime (million Btu/hr)					2.30	2.24	2.18	2.12	2.06	2.00	1.94	1.88	1.86
Natural gas use for hot water during engine downtime (million Btu/hr)					9.13	13.56	13.56	13.56	13.56	13.56	13.56	13.56	13.56
Average natural gas use for hot water (million Btu/hr)					2.64	2.80	2.74	2.69	2.63	2.57	2.52	2.46	2.44
Average natural gas use for hot water (million Btu/yr)					23,099	24,541	24,043	23,544	23,046	22,547	22,049	21,550	21,388
Annual O&M Costs/(Revenue)	*Costs shown as positive values. Revenue or savings shown as negative values.*												
Annual O&M Costs													
Natural gas cost for hot water heat ($/yr)						$159,173	$161,398	$163,583	$165,723	$167,813	$169,846	$171,816	$176,495
Natural gas cost for steam heat ($/yr)						$251,699	$260,509	$269,626	$279,063	$288,831	$298,940	$309,403	$320,232
Engine generator rebuild cost, annualized ($/yr)						$172,128	$178,153	$184,388	$190,842	$197,521	$204,435	$211,590	$218,995
Cogen and Gas conditioning System Operation & Maintenance, ($/yr)						$184,751	$191,217	$197,910	$204,837	$212,006	$219,426	$227,106	$235,055
Biogas conditioning media replacement ($/yr)						$330,642	$342,214	$354,191	$366,588	$379,419	$392,698	$406,443	$417,933
Total O&M Costs ($/yr)						**$1,098,394**	**$1,133,491**	**$1,169,699**	**$1,207,054**	**$1,245,590**	**$1,285,345**	**$1,326,358**	**$1,368,710**
Annual Savings													
Power savings ($/yr)						($2,942,763)	($3,078,844)	($3,220,845)	($3,369,014)	($3,523,610)	($3,684,901)	($3,853,165)	($4,001,225)
Total Savings ($/yr)						**($2,942,763)**	**($3,078,844)**	**($3,220,845)**	**($3,369,014)**	**($3,523,610)**	**($3,684,901)**	**($3,853,165)**	**($4,001,225)**
Net Annual Costs ($/yr)						**($1,844,370)**	**($1,945,353)**	**($2,051,145)**	**($2,161,960)**	**($2,278,020)**	**($2,399,555)**	**($2,526,807)**	**($2,632,515)**
Present Value of O&M Cost and Revenue (2028 $)	*Costs shown as positive values. Revenue or savings shown as negative values.*												
Annual O&M Costs													
Natural gas cost for hot water ($/yr)	$154,000					$155,291	$153,621	$151,903	$150,137	$148,322	$146,458	$144,543	$144,857
Natural gas cost for steam heat ($/yr)	$272,000					$245,560	$247,956	$250,375	$252,818	$255,284	$257,775	$260,290	$262,829
Engine generator rebuild cost, annualized ($/yr)	$186,000					$167,930	$169,569	$171,223	$172,893	$174,580	$176,283	$178,003	$179,740
Cogen and Gas conditioning System Operation & Maintenance, ($/yr)	$200,000					$180,245	$182,004	$183,779	$185,572	$187,383	$189,211	$191,057	$192,921
Biogas conditioning media replacement ($/yr)	$340,000					$322,577	$325,724	$328,902	$332,111	$335,351	$338,623	$341,926	$343,017
Total O&M Costs ($/yr)	**$1,152,000**					**$1,071,604**	**$1,078,873**	**$1,086,182**	**$1,093,531**	**$1,100,920**	**$1,108,349**	**$1,115,819**	**$1,123,364**
Annual Savings													
Power savings ($/yr)	($3,370,000)					($2,870,989)	($2,930,488)	($2,990,874)	($3,052,161)	($3,114,358)	($3,177,478)	($3,241,534)	($3,283,991)
Total Savings ($/yr)	**($3,370,000)**					**($2,870,989)**	**($2,930,488)**	**($2,990,874)**	**($3,052,161)**	**($3,114,358)**	**($3,177,478)**	**($3,241,534)**	**($3,283,991)**
Net Annual Costs ($/yr)	**($2,218,000)**					**($1,799,385)**	**($1,851,615)**	**($1,904,692)**	**($1,958,629)**	**($2,013,438)**	**($2,069,129)**	**($2,125,715)**	**($2,160,628)**
PV of Net Annual Costs	**($2,218,000)**												
Net Present Value (NPV) and Payback Period (2028 $)													
PV of Project Cost					$29,507,418								
PV of Net O&M Costs					$0	($1,799,385)	($1,851,615)	($1,904,692)	($1,958,629)	($2,013,438)	($2,069,129)	($2,125,715)	($2,160,628)
Total NPV - "Cash Flow"					$29,507,418	$27,708,033	$25,856,418	$23,951,726	$21,993,096	$19,979,658	$17,910,529	$15,784,814	$13,624,187
Total NPV (2028 $)	**($14,266,424)**												
Payback period (yrs):	13.30												
					($29,507,418)	($27,708,033)	($25,856,418)	($23,951,726)	($21,993,096)	($19,979,658)	($17,910,529)	($15,784,814)	($13,624,187)

Pathway 1: Biogas Conditioning and Cogen O&M

	1 Engine
Performance Inputs	
1 kWh to Btu conversion	3,412.14
Engine fuel input, LHV, 100% load (million Btu/hr)	11.82
Engine electrical output, 100% load, (kW)	1,503
Engine electrical output, 100% load, million Btu/hr)	5.130
Engine electrical efficiency, 100% load (%)	43.4%
Engine thermal output, 100% load (million Btu/hr)	5.520
Engine thermal efficiency, 100% load (%)	46.7%
Engine uptime	95%
Boiler efficiency	100%
Engine parasitic load, % of capacity	2.34%
Gas Conditoning Electrical Parasitic Run Load (kW)	70.0

process heat for gas phase
s no building heat demand.
ours analysis

ours analysis

Annual Performance, O&M Costs, Revenue, and Life-Cycle Costs

Year	Average/Sum	2037	2038	2039	2040	2041	2042	2043	2044	2045	2046	2047	2048
Operation Data, Instantaneous													
Biogas (scfm)		680.9	687.4	693.9	700.4	706.9	713.4	719.9	726.3	732.8	739.3	745.8	752.3
Biogas energy, LHV (million Btu/hr)		24.02	24.25	24.48	24.71	24.94	25.17	25.40	25.63	25.86	26.09	26.31	26.54
Biogas to engine, LHV (million Btu/hr)		23.64	23.64	23.64	23.64	23.64	23.64	23.64	23.64	23.64	23.64	23.64	23.64
Engine electrical output (kW)		3006.8	3006.8	3006.8	3006.8	3006.8	3006.8	3006.8	3006.8	3006.8	3006.8	3006.8	3006.8
Engine load (%)		100%	100%	100%	100%	100%	100%	100%	100%	100%	100%	100%	100%
Engine thermal output, average, (million Btu/hr)		7.27	7.27	7.27	7.27	7.27	7.27	7.27	7.27	7.27	7.27	7.27	7.27
Natural Gas													
Hot water heat demand (million Btu/hr)		9.13	9.13	9.13	9.13	9.13	9.13	9.13	9.13	9.13	9.13	9.13	9.13
Hot water heat demand supplied by NG (million Btu/hr)		1.86	1.86	1.86	1.86	1.86	1.86	1.86	1.86	1.86	1.86	1.86	1.86
Natural gas use in HW boilers, LHV (million Btu/hr)		1.86	1.86	1.86	1.86	1.86	1.86	1.86	1.86	1.86	1.86	1.86	1.86
Natural gas use in HW boilers, LHV (million Btu/yr)		16,262	16,262	16,262	16,262	16,262	16,262	16,262	16,262	16,262	16,262	16,262	16,262
Steam heat demand (million Btu/hr)		4.43	4.43	4.43	4.43	4.43	4.43	4.43	4.43	4.43	4.43	4.43	4.43
Natural gas use in steam boilers, LHV (million Btu/hr)		4.43	4.43	4.43	4.43	4.43	4.43	4.43	4.43	4.43	4.43	4.43	4.43
Natural gas use in steam boilers, LHV (million Btu/yr)		38,807	38,807	38,807	38,807	38,807	38,807	38,807	38,807	38,807	38,807	38,807	38,807
Operation Data, Accounting for Engine Uptime													
Engine operating hours (hrs/yr)		8,322	8,322	8,322	8,322	8,322	8,322	8,322	8,322	8,322	8,322	8,322	8,322
Biogas to engine (scfm)		637	637	637	637	637	637	637	637	637	637	637	637
Biogas to engine, LHV (million Btu/yr)		196,732	196,732	196,732	196,732	196,732	196,732	196,732	196,732	196,732	196,732	196,732	196,732
Engine electrical output (kW/yr)		25,022,925	25,022,925	25,022,925	25,022,925	25,022,925	25,022,925	25,022,925	25,022,925	25,022,925	25,022,925	25,022,925	25,022,925
Excess biogas to flare, LHV (million Btu/yr)		13,716	15,723	17,729	19,736	21,743	23,749	25,756	27,763	29,769	31,776	33,782	35,789
Biogas utilization (%)		93%	93%	92%	91%	90%	89%	88%	88%	87%	86%	85%	85%
Engine parasitic load (kW/yr)		585,037	585,037	585,037	585,037	585,037	585,037	585,037	585,037	585,037	585,037	585,037	585,037
Gas conditioning parasitic load (kW/yr)		582,540	582,540	582,540	582,540	582,540	582,540	582,540	582,540	582,540	582,540	582,540	582,540
Net power generation (kW/yr)		23,855,348	23,855,348	23,855,348	23,855,348	23,855,348	23,855,348	23,855,348	23,855,348	23,855,348	23,855,348	23,855,348	23,855,348
Natural Gas Consumption													
Natural gas use for steam (million Btu/hr)		4.43	4.43	4.43	4.43	4.43	4.43	4.43	4.43	4.43	4.43	4.43	4.43
Natural gas use for steam (million Btu/yr)		38,807	38,807	38,807	38,807	38,807	38,807	38,807	38,807	38,807	38,807	38,807	38,807
Natural gas use for hot water during engine uptime (million Btu/hr)		1.86	1.86	1.86	1.86	1.86	1.86	1.86	1.86	1.86	1.86	1.86	1.86
Natural gas use for hot water during engine downtime (million Btu/hr)		13.56	13.56	13.56	13.56	13.56	13.56	13.56	13.56	13.56	13.56	13.56	13.56
Average natural gas use for hot water (million Btu/hr)		2.44	2.44	2.44	2.44	2.44	2.44	2.44	2.44	2.44	2.44	2.44	2.44
Average natural gas use for hot water (million Btu/yr)		21,388	21,388	21,388	21,388	21,388	21,388	21,388	21,388	21,388	21,388	21,388	21,388
Annual O&M Costs/(Revenue)	*Costs shown as po*												
Annual O&M Costs													
Natural gas cost for hot water heat ($/yr)		$182,672	$189,065	$195,683	$202,532	$209,620	$216,957	$224,550	$232,410	$240,544	$248,963	$257,677	$266,695
Natural gas cost for steam heat ($/yr)		$331,440	$343,040	$355,047	$367,473	$380,335	$393,646	$407,424	$421,684	$436,443	$451,718	$467,528	$483,892
Engine generator rebuild cost, annualized ($/yr)		$226,660	$234,593	$242,804	$251,302	$260,098	$269,201	$278,623	$288,375	$298,468	$308,915	$319,727	$330,917
Cogen and Gas conditioning System Operation & Maintenance, ($/yr)		$243,282	$251,797	$260,610	$269,731	$279,172	$288,943	$299,056	$309,523	$320,356	$331,568	$343,173	$355,184
Biogas conditioning media replacement ($/yr)		$428,436	$439,243	$450,363	$461,805	$473,578	$485,693	$498,158	$510,985	$524,184	$537,767	$551,744	$566,126
Total O&M Costs ($/yr)		**$1,412,490**	**$1,457,739**	**$1,504,507**	**$1,552,843**	**$1,602,803**	**$1,654,440**	**$1,707,812**	**$1,762,977**	**$1,819,996**	**$1,878,931**	**$1,939,849**	**$2,002,816**
Annual Savings													
Power savings ($/yr)		($4,141,268)	($4,286,212)	($4,436,229)	($4,591,497)	($4,752,200)	($4,918,527)	($5,090,675)	($5,268,849)	($5,453,258)	($5,644,123)	($5,841,667)	($6,046,125)
Total Savings ($/yr)		**($4,141,268)**	**($4,286,212)**	**($4,436,229)**	**($4,591,497)**	**($4,752,200)**	**($4,918,527)**	**($5,090,675)**	**($5,268,849)**	**($5,453,258)**	**($5,644,123)**	**($5,841,667)**	**($6,046,125)**
Net Annual Costs ($/yr)		**($2,728,777)**	**($2,828,473)**	**($2,931,723)**	**($3,038,654)**	**($3,149,397)**	**($3,264,087)**	**($3,382,863)**	**($3,505,872)**	**($3,633,263)**	**($3,765,191)**	**($3,901,818)**	**($4,043,310)**
Present Value of O&M Cost and Revenue (2028 $)	*Costs shown as po*												
Annual O&M Costs													
Natural gas cost for hot water ($/yr)	$154,000	$146,271	$147,698	$149,139	$150,594	$152,063	$153,546	$155,044	$156,557	$158,084	$159,627	$161,184	$162,756
Natural gas cost for steam heat ($/yr)	$272,000	$265,393	$267,982	$270,597	$273,237	$275,903	$278,594	$281,312	$284,057	$286,828	$289,626	$292,452	$295,305
Engine generator rebuild cost, annualized ($/yr)	$186,000	$181,493	$183,264	$185,052	$186,857	$188,680	$190,521	$192,380	$194,257	$196,152	$198,066	$199,998	$201,949
Cogen and Gas conditioning System Operation & Maintenance, ($/yr)	$200,000	$194,803	$196,703	$198,622	$200,560	$202,517	$204,493	$206,488	$208,502	$210,536	$212,590	$214,664	$216,759
Biogas conditioning media replacement ($/yr)	$340,000	$343,061	$343,136	$343,242	$343,378	$343,543	$343,738	$343,961	$344,212	$344,491	$344,798	$345,131	$345,491
Total O&M Costs ($/yr)	**$1,152,000**	**$1,131,021**	**$1,138,784**	**$1,146,652**	**$1,154,626**	**$1,162,706**	**$1,170,892**	**$1,179,185**	**$1,187,585**	**$1,196,092**	**$1,204,707**	**$1,213,429**	**$1,222,260**
Annual Savings													
Power savings ($/yr)	($3,370,000)	($3,316,030)	($3,348,382)	($3,381,049)	($3,414,035)	($3,447,343)	($3,480,975)	($3,514,936)	($3,549,228)	($3,583,855)	($3,618,819)	($3,654,125)	($3,689,775)
Total Savings ($/yr)	**($3,370,000)**	**($3,316,030)**	**($3,348,382)**	**($3,381,049)**	**($3,414,035)**	**($3,447,343)**	**($3,480,975)**	**($3,514,936)**	**($3,549,228)**	**($3,583,855)**	**($3,618,819)**	**($3,654,125)**	**($3,689,775)**
Net Annual Costs ($/yr)	**($2,218,000)**	**($2,185,009)**	**($2,209,598)**	**($2,234,397)**	**($2,259,409)**	**($2,284,637)**	**($2,310,083)**	**($2,335,751)**	**($2,361,643)**	**($2,387,762)**	**($2,414,112)**	**($2,440,695)**	**($2,467,514)**
PV of Net Annual Costs	**($2,218,000)**												
Net Present Value (NPV) and Payback Period (2028 $)													
PV of Project Cost													
PV of Net O&M Costs		($2,185,009)	($2,209,598)	($2,234,397)	($2,259,409)	($2,284,637)	($2,310,083)	($2,335,751)	($2,361,643)	($2,387,762)	($2,414,112)	($2,440,695)	($2,467,514)
Total NPV - "Cash Flow"		$11,439,177	$9,229,579	$6,995,182	$4,735,773	$2,451,136	$141,054	($2,194,697)	($4,556,340)	($6,944,102)	($9,358,214)	($11,798,910)	($14,266,424)
Total NPV (2028 $)	**($14,266,424)**												
Payback period (yrs):	13.30												
		($11,439,177)	($9,229,579)	($6,995,182)	($4,735,773)	($2,451,136)	($141,054)	$2,194,697	$4,556,340	$6,944,102	$9,358,214	$11,798,910	$14,266,424

Pathway 2: Biogas Upgrading O&M

Performance Inputs		
Membrane system methane capture	99.49%	Unison quote
System uptime	95%	Matched with cogen uptime.
Boiler efficiency	100%	S/A Cogen; Updated per Strand's input
Electrical Usage (kW)	475.70	Unison quote + 40 kw for product gas compressor
Biogas LHV (Btu/scf)	588	Based on methane content

O&M/Revenue & Life-cycle Cost Inputs			
Revenue inputs			
Btu (LHV)/ RIN		77,000	
LHV to HHV conversion factor		0.903	
Life-cycle cost inputs			
2025 Project Cost		$25,572,000	From 'RNG Capital' Tab
Escalation rate		3.5%	
Discount rate		2.500%	
Present Value (PV) year		2028	

Annual Performance, O&M Costs, Revenue, and Life-Cycle Costs

Year	Average/Sum	2025	2026	2027	2028	2029	2030	2031	2032	2033	2034	2035	2036	2037	2038	2039
Operation Data, Instantaneous																
Biogas (scfm)					622	629	635	642	648	655	661	668	674	681	687	694
Biogas energy, LHV (million Btu/hr)					21.96	22.19	22.42	22.65	22.88	23.11	23.34	23.57	23.79	24.02	24.25	24.48
Biomethane, LHV (million Btu/hr)					21.85	22.08	22.31	22.53	22.76	22.99	23.22	23.45	23.67	23.90	24.13	24.36
Tail gas, LHV (million Btu/hr)					0.112	0.113	0.114	0.116	0.117	0.118	0.119	0.120	0.121	0.123	0.124	0.125
Natural Gas																
Hot water heat demand (million Btu/hr)					9.13	9.13	9.13	9.13	9.13	9.13	9.13	9.13	9.13	9.13	9.13	9.13
Natural gas use in boilers, LHV (million Btu/hr)					9.13	9.13	9.13	9.13	9.13	9.13	9.13	9.13	9.13	9.13	9.13	9.13
Natural gas use in boilers, LHV (million Btu/yr)					79,979	79,979	79,979	79,979	79,979	79,979	79,979	79,979	79,979	79,979	79,979	79,979
Steam heat demand (million Btu/hr)					4.43	4.43	4.43	4.43	4.43	4.43	4.43	4.43	4.43	4.43	4.43	4.43
Natural gas use in steam boilers, LHV (million Btu/hr)					4.43	4.43	4.43	4.43	4.43	4.43	4.43	4.43	4.43	4.43	4.43	4.43
Natural gas use in steam boilers, LHV (million Btu/yr)					38,807	38,807	38,807	38,807	38,807	38,807	38,807	38,807	38,807	38,807	38,807	38,807
Operation Data, Accounting for System Uptime																
Total biogas energy LHV (million Btu/yr)					192,389	194,396	196,402	198,409	200,415	202,422	204,429	206,435	208,442	210,448	212,455	214,462
Biogas to upgrading, LHV (million Btu/yr)					182,769	184,676	186,582	188,488	190,395	192,301	194,207	196,113	198,020	199,926	201,832	203,738
Biogas to upgrading (scfm)					591	598	604	610	616	622	628	635	641	647	653	659
Biomethane, LHV (million Btu/yr)					181,837	183,734	185,630	187,527	189,424	191,320	193,217	195,113	197,010	198,906	200,803	202,699
Biogas utilization (%)					95%	95%	95%	95%	95%	95%	95%	95%	95%	95%	95%	95%
RIN produced (RIN/yr)					2,361,524	2,386,155	2,410,785	2,435,416	2,460,046	2,484,677	2,509,307	2,533,938	2,558,569	2,583,199	2,607,830	2,632,460
Biogas upgrading electrical usage (kW)					351.63	355.30	358.96	362.63	366.30	369.97	373.63	377.30	380.97	384.64	388.30	391.97
Annual O&M Costs/(Revenue)	*Costs shown as positive values. Revenue or savings shown as negative values.*															
Annual O&M Costs																
Natural gas cost for hot water heat ($/yr)						$518,739	$536,895	$555,686	$575,135	$595,265	$616,099	$637,663	$659,981	$683,080	$706,988	$731,732
Natural gas cost for steam heat ($/yr)						$251,699	$260,509	$269,626	$279,063	$288,831	$298,940	$309,403	$320,232	$331,440	$343,040	$355,047
Annual System Operation, $/yr						$93,179	$96,440	$99,816	$103,309	$106,925	$110,667	$114,541	$118,550	$122,699	$126,993	$131,438
Media Replacement Cost, $/year						$366,723	$379,558	$392,843	$406,592	$420,823	$435,552	$450,796	$466,574	$482,904	$499,806	$517,299
Electricity Cost ($/yr)						$389,801	$407,609	$426,185	$445,563	$465,775	$486,856	$508,842	$531,770	$555,681	$580,613	$606,611
Annual Reporting Fees and Certification, $/yr						$114,752	$118,769	$122,926	$127,228	$131,681	$136,290	$141,060	$145,997	$151,107	$156,396	$161,869
Total O&M Costs ($/yr)	**$2,619,612**					**$1,734,894**	**$1,799,779**	**$1,867,082**	**$1,936,891**	**$2,009,299**	**$2,084,403**	**$2,162,304**	**$2,243,103**	**$2,326,910**	**$2,413,836**	**$2,503,996**
Annual Revenue																
Natural gas sale to pipeline ($/yr)						($210,839)	($220,471)	($230,519)	($241,000)	($251,932)	($263,334)	($275,226)	($287,628)	($300,561)	($314,047)	($328,108)
D3 RIN revenue ($/yr)						($5,120,373)	($5,354,290)	($5,598,309)	($5,852,850)	($6,118,350)	($6,395,266)	($6,684,072)	($6,985,259)	($7,299,341)	($7,626,853)	($7,968,348)
Total Revenue ($/yr)	**($8,794,208)**					**($5,331,212)**	**($5,574,761)**	**($5,828,827)**	**($6,093,849)**	**($6,370,282)**	**($6,658,601)**	**($6,959,298)**	**($7,272,887)**	**($7,599,902)**	**($7,940,900)**	**($8,296,457)**
Net Revenue ($/yr)	**($6,174,596)**					**($3,596,319)**	**($3,774,982)**	**($3,961,745)**	**($4,156,958)**	**($4,360,983)**	**($4,574,197)**	**($4,796,994)**	**($5,029,784)**	**($5,272,992)**	**($5,527,063)**	**($5,792,460)**
Present Value of O&M Cost and Revenue (2028 $)	*Costs shown as positive values. Revenue or savings shown as negative values.*															
Annual O&M Costs																
Natural gas cost for hot water heat ($/yr)	$561,000					$506,087	$511,024	$516,010	$521,044	$526,127	$531,260	$536,443	$541,677	$546,962	$552,298	$557,686
Natural gas cost for steam heat ($/yr)	$272,000					$245,560	$247,956	$250,375	$252,818	$255,284	$257,775	$260,290	$262,829	$265,393	$267,982	$270,597
Annual System Operation, $/yr	$101,000					$90,906	$91,793	$92,689	$93,593	$94,506	$95,428	$96,359	$97,299	$98,248	$99,207	$100,175
Media Replacement Cost, $/year	$397,000					$357,779	$361,269	$364,794	$368,353	$371,946	$375,575	$379,239	$382,939	$386,675	$390,448	$394,257
Electricity Cost ($/yr)	$469,000					$380,294	$387,968	$395,755	$403,658	$411,677	$419,814	$428,071	$436,449	$444,949	$453,574	$462,325
Annual Reporting Fees and Certification, $/yr	$124,000					$111,953	$113,046	$114,149	$115,262	$116,387	$117,522	$118,669	$119,827	$120,996	$122,176	$123,368
Total O&M Costs ($/yr)	**$1,924,000**					**$1,692,579**	**$1,713,056**	**$1,733,771**	**$1,754,727**	**$1,775,928**	**$1,797,375**	**$1,819,071**	**$1,841,019**	**$1,863,223**	**$1,885,685**	**$1,908,408**
Annual Revenue																
Natural gas sale to pipeline ($/yr)	($254,000)					($205,696)	($209,847)	($214,059)	($218,334)	($222,671)	($227,073)	($231,538)	($236,070)	($240,668)	($245,333)	($250,066)
D3 (cellulosic) RIN revenue ($/yr)	($6,165,000)					($4,995,486)	($5,096,290)	($5,198,586)	($5,302,393)	($5,407,730)	($5,514,618)	($5,623,077)	($5,733,127)	($5,844,790)	($5,958,085)	($6,073,035)
Total Revenue ($/yr)	($6,419,000)					**($5,201,183)**	**($5,306,138)**	**($5,412,646)**	**($5,520,727)**	**($5,630,401)**	**($5,741,691)**	**($5,854,615)**	**($5,969,197)**	**($6,085,457)**	**($6,203,418)**	**($6,323,101)**
Net Annual Costs ($/yr)	**($4,495,000)**					**($3,508,604)**	**($3,593,082)**	**($3,678,874)**	**($3,765,999)**	**($3,854,474)**	**($3,944,316)**	**($4,035,545)**	**($4,128,178)**	**($4,222,234)**	**($4,317,733)**	**($4,414,694)**
PV of Net Annual Costs	**($4,494,000)**															
Net Present Value (NPV) and Payback Period (2028 $)																
PV of Project Cost					$28,352,133											
PV of Net Annual Savings					$0	($3,508,604)	($3,593,082)	($3,678,874)	($3,765,999)	($3,854,474)	($3,944,316)	($4,035,545)	($4,128,178)	($4,222,234)	($4,317,733)	($4,414,694)
Total NPV - "Cash Flow"					$28,352,133	$24,843,530	$21,250,448	$17,571,574	$13,805,574	$9,951,101	$6,006,785	$1,971,240	($2,156,937)	($6,379,172)	($10,696,905)	($15,111,598)
Total NPV (2028 $)	**($59,458,016)**															
Payback period (yrs):	6.31				-	-7.1	-5.9	-4.8	-3.7	-2.6	-1.5	-0.5	0.5	1.5	2.5	3.4

Pathway 2: Biogas Upgrading O&M

Performance Inputs	
Membrane system methane capture	99.49%
System uptime	95%
Boiler efficiency	100%
Electrical Usage (kW)	475.70
Biogas LHV (Btu/scf)	588

Annual Performance, O&M Costs, Revenue, and Life-Cycle Costs

Year	Average/Sum	2040	2041	2042	2043	2044	2045	2046	2047	2048
Operation Data, Instantaneous										
Biogas (scfm)		700	707	713	720	726	733	739	746	752
Biogas energy, LHV (million Btu/hr)		24.71	24.94	25.17	25.40	25.63	25.86	26.09	26.31	26.54
Biomethane, LHV (million Btu/hr)		24.58	24.81	25.04	25.27	25.50	25.72	25.95	26.18	26.41
Tail gas, LHV (million Btu/hr)		0.126	0.127	0.128	0.130	0.131	0.132	0.133	0.134	0.135
Natural Gas										
Hot water heat demand (million Btu/hr)		9.13	9.13	9.13	9.13	9.13	9.13	9.13	9.13	9.13
Natural gas use in boilers, LHV (million Btu/hr)		9.13	9.13	9.13	9.13	9.13	9.13	9.13	9.13	9.13
Natural gas use in boilers, LHV (million Btu/yr)		79,979	79,979	79,979	79,979	79,979	79,979	79,979	79,979	79,979
Steam heat demand (million Btu/hr)		4.43	4.43	4.43	4.43	4.43	4.43	4.43	4.43	4.43
Natural gas use in steam boilers, LHV (million Btu/hr)		4.43	4.43	4.43	4.43	4.43	4.43	4.43	4.43	4.43
Natural gas use in steam boilers, LHV (million Btu/yr)		38,807	38,807	38,807	38,807	38,807	38,807	38,807	38,807	38,807
Operation Data, Accounting for System Uptime										
Total biogas energy LHV (million Btu/yr)		216,468	218,475	220,481	222,488	224,495	226,501	228,508	230,514	232,521
Biogas to upgrading, LHV (million Btu/yr)		205,645	207,551	209,457	211,364	213,270	215,176	217,082	218,989	220,895
Biogas to upgrading (scfm)		665	672	678	684	690	696	702	709	715
Biomethane, LHV (million Btu/yr)		204,596	206,493	208,389	210,286	212,182	214,079	215,975	217,872	219,768
Biogas utilization (%)		95%	95%	95%	95%	95%	95%	95%	95%	95%
RIN produced (RIN/yr)		2,657,091	2,681,721	2,706,352	2,730,982	2,755,613	2,780,243	2,804,874	2,829,504	2,854,135
Biogas upgrading electrical usage (kW)		395.64	399.31	402.97	406.64	410.31	413.98	417.64	421.31	424.98
Annual O&M Costs/(Revenue)	*Costs shown as pos*									
Annual O&M Costs										
Natural gas cost for hot water heat ($/yr)		$757,343	$783,850	$811,285	$839,680	$869,069	$899,486	$930,968	$963,552	$997,276
Natural gas cost for steam heat ($/yr)		$367,473	$380,335	$393,646	$407,424	$421,684	$436,443	$451,718	$467,528	$483,892
Annual System Operation, $/yr		$136,038	$140,800	$145,728	$150,828	$156,107	$161,571	$167,226	$173,079	$179,136
Media Replacement Cost, $/year		$535,405	$554,144	$573,539	$593,613	$614,389	$635,893	$658,149	$681,184	$705,026
Electricity Cost ($/yr)		$633,716	$661,976	$691,438	$722,152	$754,168	$787,541	$822,326	$858,581	$896,367
Annual Reporting Fees and Certification, $/yr		$167,535	$173,399	$179,468	$185,749	$192,250	$198,979	$205,943	$213,151	$220,611
Total O&M Costs ($/yr)	**$2,619,612**	**$2,597,510**	**$2,694,503**	**$2,795,104**	**$2,899,445**	**$3,007,667**	**$3,119,912**	**$3,236,330**	**$3,357,076**	**$3,482,309**
Annual Revenue										
Natural gas sale to pipeline ($/yr)		($342,770)	($358,055)	($373,991)	($390,603)	($407,921)	($425,971)	($444,786)	($464,396)	($484,834)
D3 RIN revenue ($/yr)		($8,324,405)	($8,695,625)	($9,082,633)	($9,486,080)	($9,906,641)	($10,345,021)	($10,801,953)	($11,278,196)	($11,774,545)
Total Revenue ($/yr)	**($8,794,208)**	**($8,667,175)**	**($9,053,680)**	**($9,456,624)**	**($9,876,683)**	**($10,314,562)**	**($10,770,993)**	**($11,246,739)**	**($11,742,593)**	**($12,259,379)**
Net Revenue ($/yr)	**($6,174,596)**	**($6,069,665)**	**($6,359,177)**	**($6,661,520)**	**($6,977,238)**	**($7,306,895)**	**($7,651,081)**	**($8,010,409)**	**($8,385,517)**	**($8,777,071)**
Present Value of O&M Cost and Revenue (2028 $)	*Costs shown as pos*									
Annual O&M Costs										
Natural gas cost for hot water heat ($/yr)	$561,000	$563,127	$568,621	$574,168	$579,770	$585,426	$591,138	$596,905	$602,728	$608,609
Natural gas cost for steam heat ($/yr)	$272,000	$273,237	$275,903	$278,594	$281,312	$284,057	$286,828	$289,626	$292,452	$295,305
Annual System Operation, $/yr	$101,000	$101,152	$102,139	$103,135	$104,142	$105,158	$106,184	$107,220	$108,266	$109,322
Media Replacement Cost, $/year	$397,000	$398,103	$401,987	$405,909	$409,869	$413,868	$417,906	$421,983	$426,100	$430,257
Electricity Cost ($/yr)	$469,000	$471,203	$480,211	$489,350	$498,621	$508,026	$517,568	$527,247	$537,066	$547,027
Annual Reporting Fees and Certification, $/yr	$124,000	$124,572	$125,787	$127,014	$128,253	$129,504	$130,768	$132,044	$133,332	$134,633
Total O&M Costs ($/yr)	**$1,924,000**	**$1,931,394**	**$1,954,648**	**$1,978,171**	**$2,001,967**	**$2,026,039**	**$2,050,391**	**$2,075,025**	**$2,099,944**	**$2,125,152**
Annual Revenue										
Natural gas sale to pipeline ($/yr)	($254,000)	($254,868)	($259,741)	($264,683)	($269,698)	($274,785)	($279,946)	($285,182)	($290,493)	($295,880)
D3 (cellulosic) RIN revenue ($/yr)	($6,165,000)	($6,189,661)	($6,307,984)	($6,428,027)	($6,549,811)	($6,673,360)	($6,798,697)	($6,925,844)	($7,054,824)	($7,185,663)
Total Revenue ($/yr)	($6,419,000)	**($6,444,529)**	**($6,567,724)**	**($6,692,710)**	**($6,819,509)**	**($6,948,146)**	**($7,078,643)**	**($7,211,026)**	**($7,345,317)**	**($7,481,543)**
Net Annual Costs ($/yr)	**($4,495,000)**	**($4,513,135)**	**($4,613,077)**	**($4,714,539)**	**($4,817,542)**	**($4,922,107)**	**($5,028,252)**	**($5,136,001)**	**($5,245,373)**	**($5,356,391)**
PV of Net Annual Costs	**($4,494,000)**									
Net Present Value (NPV) and Payback Period (2028 $)										
PV of Project Cost										
PV of Net Annual Savings		($4,513,135)	($4,613,077)	($4,714,539)	($4,817,542)	($4,922,107)	($5,028,252)	($5,136,001)	($5,245,373)	($5,356,391)
Total NPV - "Cash Flow"		($19,624,733)	($24,237,810)	($28,952,349)	($33,769,891)	($38,691,998)	($43,720,250)	($48,856,251)	($54,101,625)	($59,458,016)
Total NPV (2028 $)	**($59,458,016)**									
Payback period (yrs):	6.31	4.3	5.3	6.1	7.0	7.9	8.7	9.5	10.3	11.1

APPENDIX 4D

BIOGAS UPGRADING SYSTEM TECHNOLOGY REVIEW

PROJECT MEMORANDUM

MADISON METROPOLITAN SEWERAGE DISTRICT

Heat and Power Improvements Facilities Plan

Project No.: 203259
Date: October 30, 2024
Prepared By: Tyler Dougherty
Reviewed By: Becky Luna, Lindsey Busch
Subject: Biogas Upgrading System Technology Review

This document is released for the purpose of information exchange review and planning only under the authority of Lindsey I. Busch, Wisconsin, E-45234-6.

1.0 INTRODUCTION

This Project Memorandum (PM) provides an overview of biogas upgrading technologies that can be used to produce renewable natural gas (RNG) for injection into the natural gas pipeline. The purpose of the PM is to provide sufficient background information to support the team in narrowing these technologies to a base case technology to be used for the Heat and Power Improvements Facilities Plan.

2.0 BIOGAS UPGRADING TECHNOLOGIES

There are four biogas upgrading technologies that are generally used in the industry to produce pipeline quality biogas:

- Membrane separation.
- Pressure swing adsorption.
- Amine wash.
- Water wash.

All these treatment processes separate the methane (CH_4) from the carbon dioxide (CO_2) and other constituents in the raw biogas, producing a CH_4 stream, the RNG, and a CO_2 stream, termed "tail gas."

Membrane and pressure swing adsorption are "dry" upgrading systems that use pressure to physically separate CH_4 from CO_2 and other impurities based on molecular size and ionic charge. Amine and water wash are "wet" upgrading systems that separate CH_4 from CO_2 and other impurities by dissolving the impurities into a liquid stream, while the CH_4 remains in the gas stream. All four processes have been successfully used for biogas upgrading in the United States. Amine and water wash systems become cost effective at significantly larger flow rates than what is produced at Madison Metropolitan Sewerage District's (MMSD's) Nine Springs Wastewater Treatment Plant (NSWTP) and are only briefly summarized herein.

2.1 Membrane Biogas Upgrading

Membranes have been widely used for biogas upgrading at water resource recovery facilities (WRRFs) for over a decade. Prior to use for RNG production, membranes have been used in natural gas production for

over 30 years. Biogas upgrading membranes are designed to separate CO_2 from CH_4, and utilize other upstream technologies to remove H_2S, siloxanes, moisture, and volatile organic compounds (VOCs). Oxygen (O_2) and nitrogen (N_2) are not removed by upstream processes or the membranes.

Biogas is compressed to approximately 150 pounds per square inch gauge (psig) and conveyed inside membrane tubes. Smaller molecules like CO_2 flow through the membrane's pores, while the larger CH_4 molecules are retained inside the membrane. The separation is not perfect, so a small portion of the CH_4 flows through the membranes and some CO_2 is retained within the membranes. A diagram of the membranes is illustrated in Figure 1.

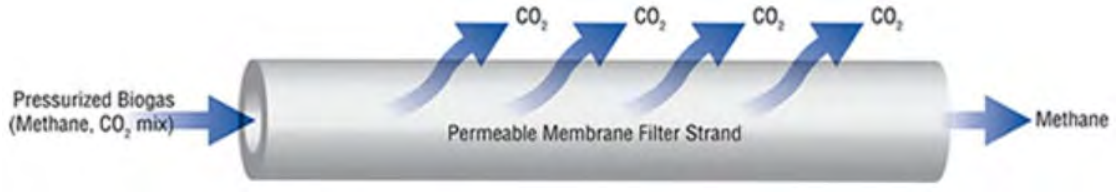

Figure 1 Membrane Biogas Upgrading

Membrane systems can achieve up to 70 to 99 percent CH_4 recovery, depending on the number of membrane stages. A single-stage membrane system is typically used for vehicle fueling and achieves 70 percent CH_4 recovery. Single-stage systems are not able to achieve the RNG quality required for pipeline injection.

A two-stage membrane system, with the membranes operating in series, can achieve approximately 95 percent CH_4 recovery. A three-stage membrane system, where the tail gas from the first stage membrane is routed through a third membrane, can achieve up to 99 percent CH_4 recovery. Figure 2 shows the full process flow of two- or three-stage membrane treatment. Three-stage membrane treatment is the current industry standard.

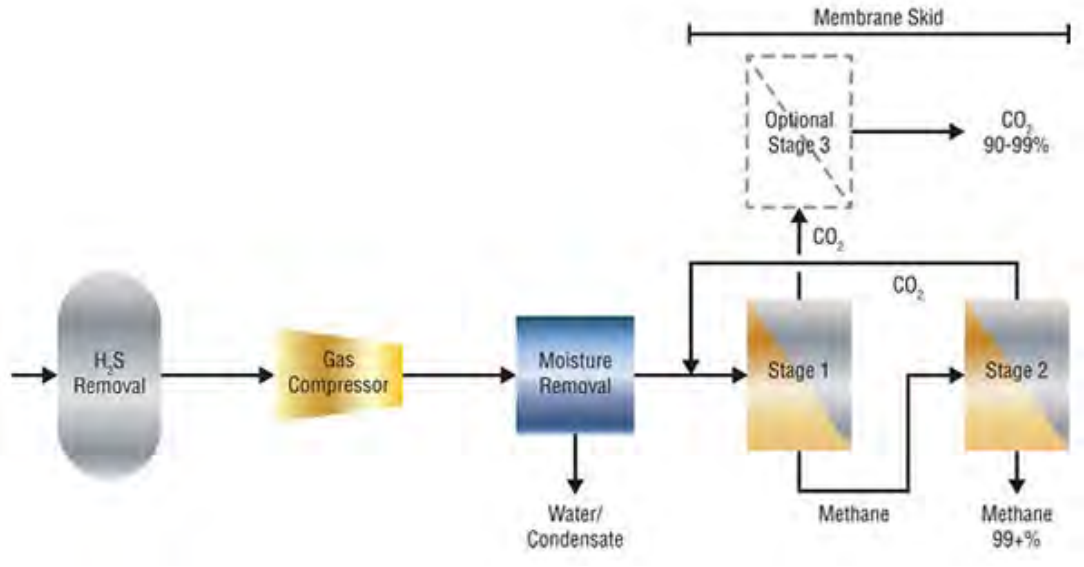

Source: Biocycle

Figure 2 Multi-Stage Membrane Treatment

The temperature and flow rate along the membrane tubes control the process' efficacy. Operation at higher temperatures opens the pores of the membranes further, allowing for higher flow rates. However, the larger pore openings also allow more CH_4 through the membrane, which reduces the selectivity of the process. Decreasing the flow rate results in a longer residence time inside the membrane, which allows more CO_2 to flow through the pores, resulting in a product gas with a higher percent CH_4. However, the longer residence time also results in more CH_4 permeation through the membrane, decreasing the CH_4 capture. The multiple stages of membrane treatment have different residence times, which allows the process to produce RNG with a higher methane content and at a high capture efficiency.

The membranes are only capable of separating CO_2 and CH_4, and do not remove significant amounts of O_2 or N_2. Additionally, the H_2S, VOCs, and siloxanes in the raw biogas can foul them, preventing proper operation and requiring membrane replacement. Pretreatment equipment (similar to what is currently installed at the NSWTP) is required to remove these constituents to provide a long membrane life. It is recommended that the pretreatment, membrane, and ancillary equipment and instrumentation are provided as a package by a single manufacturer to allow for proper design and operational coordination between the different treatment processes, as well as a single point of responsibility for the biogas upgrading equipment.

The minimal removal of O_2 or N_2 in the raw biogas increases the concentration of these constituents in the product RNG because once the CO_2 is removed, the overall quantity of gas decreases, meaning the O_2 and N_2 occupy a larger portion of the flow. This is important when evaluating the RNG quality requirements, as the percentages of O_2 and N_2 in the raw biogas can appear to meet tariff requirements, but the more concentrated RNG percentages may be too high. However, WRRFs are typically able to meet N_2 and O_2 limits required by natural gas utilities without a separate removal process.

There are many membrane system manufacturers, including Unison, DMT Clear Gas, GraniteFuel, Greenlane Biogas, NISSEN, AB Energy, Suez "Methanis", and Air Liquide. Membrane system manufacturers have hundreds of installations worldwide and over 50 installations in North America. An abbreviated installation list pertaining specifically to water resource recovery facilities is provided in Table 1.

Table 1 Abbreviated Membrane Installation List

Year Commissioned	Manufacturer	Location	System size, cfd	Feedstock
2015	Unison Solutions	Grand Junction, CO	144,000	Municipal wastewater
2018	DMT	Honolulu, HI	504,000	Municipal wastewater
2019	Unison Solutions	Longmont, CO	144,000	Municipal wastewater
2019	Unison Solutions	Lincoln, NE	576,000	Municipal wastewater
2019	Unison Solutions	Englewood, CO	576,000	Municipal wastewater
2020	Unison Solutions	Boulder, CO	288,000	Municipal wastewater
2020	DMT	Sioux City, IA	1,152,000	Municipal wastewater
2021	Unison Solutions	Grand Rapids, MI	1,152,000	Municipal wastewater
2021	DMT	Fremont, NE	720,000	Municipal wastewater
2021	DMT	Tucson, AZ	1,008,000	Municipal wastewater
2023	Unison Solutions	Roanoke, VA	576,000	Municipal wastewater
2024	Unison Solutions	Omaha, NE	1,728,000	Municipal wastewater

Year Commissioned	Manufacturer	Location	System size, cfd	Feedstock
2024	DMT	Raleigh, NC	936,000	Municipal wastewater
TBD	Granite Fuels	Bellaire, OH	TBD	Municipal wastewater
TBD	Granite Fuels	Mississauga, ON, Canada	TBD	Municipal wastewater

2.2 Pressure Swing Adsorption Biogas Upgrading

Pressure Swing Adsorption (PSA) systems have been in use to convert biogas to RNG for over 10 years. These systems achieve approximately 95 to 98 percent CH_4 recovery. PSA is a batch process that operates at a pressure range between 90 to 120 psig, depending on the installation site and the manufacturer. Each vessel is filled with an adsorptive media that preferentially adsorbs CO_2 at high pressure due to these molecules' smaller size relative to CH_4. The tanks include media that adsorbs a small portion of N_2 and O_2, which can be beneficial if the natural gas utility's tariff is stringent for either constituent. Including additional media for O_2 and N_2 impacts the overall design of the system and recovery efficiency by increasing the tank size and decreasing the amount of media available for CO_2 capture.

Pretreatment of the biogas is dependent on the manufacturer and their proprietary media. Most manufacturers require pretreatment to remove H_2S, as it can permanently reduce the capacity of the media to remove CO_2, a process known as fouling. Guild Associates, Inc. uses the media in the PSA system to remove the H_2S, though this does result in fouling over time.

Similar to H_2S removal, some manufacturers require removal of VOCs and siloxane prior to the PSA vessels, while others do not. If contaminants are not removed prior to the PSA system, they will be discharged with the tail gas and must be treated at the end of the system.

Following pretreatment (if used), biogas is compressed and conveyed into a reactor vessel. The impurities adsorb onto the media, while the CH_4 does not. Once the media is saturated, the CH_4 is removed from the vessel, which is then depressurized by a vacuum pump to remove the CO_2 and other constituents and regenerate the adsorptive media. The steps described above happen in a batched sequence, so as one vessel is being fed, others are depressurizing, regenerating, and repressurizing. Figure 3 shows biogas flow through a PSA system.

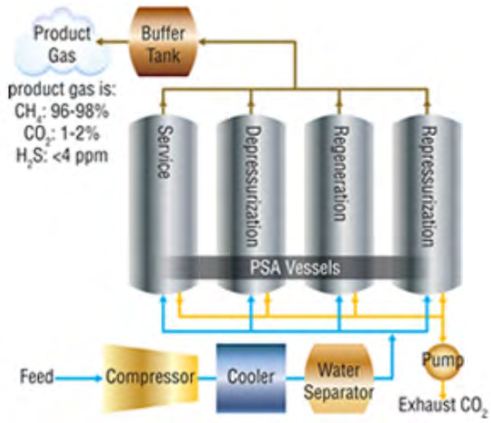

Source: Biocycle

Figure 3 PSA Biogas Upgrading

Depending on the required RNG pressure and operating pressure of specific manufacturers, the product gas may or may not need to be compressed again for injection into a natural gas pipeline. In order to meet Madison Gas and Electric's (MGE's) discharge pressure of 165 psig, product gas compressors are recommended.

Manufacturers of PSA systems include Ivys Energy Solutions (formerly Xebec Adsorption), Sysadvance, Greenlane Biogas, Bioferm Energy Systems, Carbotech, and Guild Associates.

An abbreviated installation list of PSA installations is provided in Table 2.

Table 2 Abbreviated PSA Installation List

Year Commissioned	Manufacturer	Location	System size, cfd	Feedstock
2006	Xebec	Cincinnati, OH	TBD	Landfill gas
Before 2009	Xebec	Rochester, NH	TBD	Landfill gas
2012	Xebec	Fortix, BC, Canada	TBD	Landfill gas
2017	Guild Associates, Inc.	Decatur, IL	TBD	Landfill gas
2020	Guild Associates, Inc.	Des Moines, IA	3,240,000	Municipal wastewater / co-digestion
2021	Xebec	Toronto, ON, Canada	TBD	Source separated organics
2023	Sysadvance	WI	432,000	Dairy waste
2023	Sysadvance	WI	576,000	Dairy waste
TBD	Greenlane	Redding, CA	TBD	Dairy manure
TBD	Greenlane	Eugene, OR	TBD	Municipal wastewater
TBD	Guild Associates, Inc.	Billings, MT	2,304,000	Landfill gas
TBD	Guild Associates, Inc.	Dodge City, KS	TBD	Municipal/industrial wastewater

2.3 Water Wash

Water wash is a "wet" two-stage process with a removal step and a regeneration step. Water wash systems require the biogas to be compressed to approximately 150 psi. Water wash has been used successfully for biogas upgrading in agricultural and landfill sites in the U.S., though not at WRRFs. Pressurized biogas is discharged into the bottom of a reactor tower, as high-pressure water is sprayed from the top. The soluble gases, CO_2 and H_2S, dissolve into the water and the less soluble CH_4 mostly remains in the gas phase. The CH_4 product gas is conveyed to the pipeline.

In an intermediate step, the water containing dissolved CO_2 and H_2S flows to flash tank to quickly depressurize to solution, releasing the small amount of dissolved CH_4 that is sent to the beginning of the process. The water then flows to a low-pressure tower, where a blower provides air to strip the water of the dissolved CO_2 and H_2S, and the gases are vented or sent to further processing.

Figure 4 shows a simplified flow diagram for the water wash process.

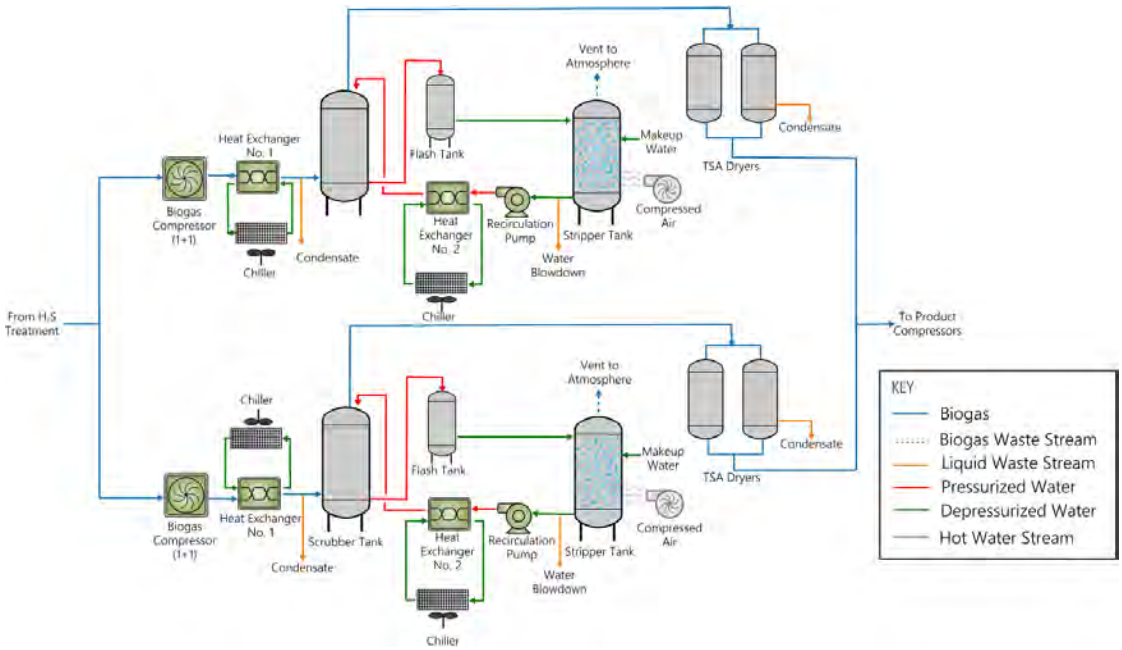

Figure 4 Water Wash Biogas Upgrading PFD

Manufacturers of water wash systems are Greenlane Renewables and Malmberg. An abbreviated installation list of water wash facilities in the United States is provided in Table 3.

Table 3 Abbreviated Water Wash Installation List

Year Commissioned	Manufacturer	Location	System size, cfd	Feedstock
2012	Greenlane Renewables	Indiana	2,232,000	Ag Waste
2013	Greenlane Renewables	Michigan	4,464,000	Landfill
2014	Greenlane Renewables	Perris, California / CR&R Environmental Services	1,800,000	Municipal Green Waste
2018	Greenlane Renewables	Oregon	1,800,000	Wastewater
2021	Greenlane Renewables	California	576,000	Ag Waste
2021	Greenlane Renewables	Missouri	1,440,000	Landfill
2021	Greenlane Renewables	Illinois	2,304,000	Landfill
2021	Greenlane Renewables	Illinois	2,304,000	Landfill
2021	Greenlane Renewables	Florida	561,600	Landfill

2.4 Amine Wash

Amine upgrading has been utilized in the petroleum industry and at landfills for decades and is used at two U.S. biogas upgrading installations in the agricultural industry. There are no current installations at WRRFs in the United States, although a system is currently in design at Metro Water Recovery's Robert W. Hite Treatment Facility in Colorado. In amine systems, biogas is introduced into the bottom of the adsorption tower while an amine solution is sprayed from the top. The amine solubilizes the CO_2 into the

liquid phase at relatively low pressure (~12 psi). The CH_4 flows out of the top of the tower while the CO_2-rich amine solution is pumped to a stripping tower. In the second step of the process, the solution is heated in the stripping tower to break the bond between the CO_2 and amine in solution, releasing the CO_2 as a gas.

The regenerated solvent is recirculated to the adsorption tower, while the CO_2 is typically vented to the atmosphere. The product gas is processed through a temperature swing adsorption (TSA) system to remove moisture prior to the product compressors.

A boiler system is required to supply heat for amine regeneration. Due to the high required temperature of the system, the heat can be conveyed using either water under pressure, a water-glycol mixture (when piped externally in cold climates), or steam. While the system has a high temperature requirement, up to 90 percent of the heat generated can be recovered and repurposed to offset digester heat demands. This heat is available in the form of a glycol-water solution at a temperature of approximately 130 degrees Fahrenheit.

An example PFD for the amine biogas upgrading system is shown in Figure 5.

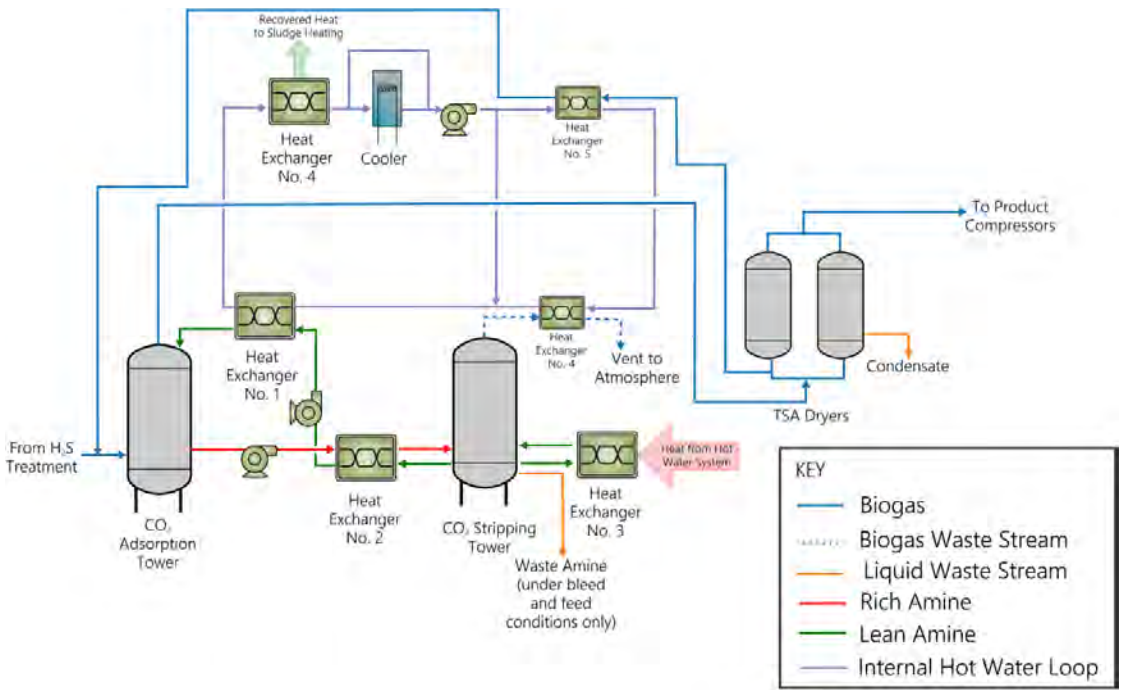

Figure 5 Amine Upgrading PFD

Manufacturers of amine systems are Wartsila (licensed by Unison Solutions) and Morrow Energy. An abbreviated installation list of amine upgrading facilities in the United States is provided in Table 4.

Table 4 Abbreviated Amine Installation List

Year Commissioned	Manufacturer	Location	System size, cfd	Feedstock
2019	Wartsila	Threemile Canyon Farms - Boardman, OR	5,414,400	Dairy waste
2020	Wartsila	Shell New Energies - Junction City, OR	5,414,400	Co-digestion
TBD	Morrow Energy	Blue Ridge - Pearland, TX	18,432,000	Landfill gas

Year Commissioned	Manufacturer	Location	System size, cfd	Feedstock
TBD	Morrow Energy	JDP Renewables - Welsh, LA	3,600,000	Landfill gas
TBD	Morrow Energy	Melissa Renewables - Melissa, TX	8,640,000	Landfill gas
TBD	Morrow Energy	Klickitat LFG Plant - Roosevelt, WA	11,520,000	Landfill gas
TBD	Morrow Energy	Ft. Smith Cambrian - Ft. Smith, AR	3,600,000	Landfill gas
TBD	Morrow Energy	Greenwood Farms - Tyler, TX	2,880,000	Landfill gas
TBD	Morrow Energy	Edinburg Renewables - Edinburg, TX	3,600,000	Landfill gas
TBD	Morrow Energy	Huckabay Ridge Digester Plant - Stephenville, TX	2,160,000	Manure digestion

2.5 Tail Gas Treatment

The tail gas from a biogas upgrading system is typically considered a new emission source from a treatment facility by local air quality regulators, and therefore requires updating the facility's air permit before construction can commence. Depending on the tail gas parameters and local regulations, it can be discharged directly to atmosphere, treated using a thermal oxidizer or regenerative thermal oxidizer, or treated with a third stage membrane (for membrane systems). Discharging the tail gas to the atmosphere without additional treatment would likely result in increased greenhouse gas emissions compared to tail gas treatment, as tail gas contains trace concentrations of CH_4, a more potent greenhouse gas than CO_2.

There is interest in the industry in CO_2 capture from the tail gas for beneficial use, though there are no known installations at WRRFs.

Manufacturers of all membrane and most PSA systems require H_2S removal prior to upgrading, so the H_2S is not a consideration in the tail gas. Due to the H_2S concentration in the raw biogas produced at the NSWTP, H_2S pretreatment recommended, negating the need for tail gas treatment.

As the different upgrading technologies have varying CH_4 capture rates, the CH_4 content in the tail gas can vary. Tail gas from membrane, water wash, and amine upgrading has been permitted for direct release to the atmosphere due to the relatively low CH_4 concentrations, while PSA typically requires further treatment.

Thermal oxidizers are fueled by natural gas and operate at temperatures between 1,600 and 1,700 degrees F to oxidize H_2S, siloxanes, VOCs, and the low concentration of CH_4 carried into the tail gas. A traditional thermal oxidizer combusts natural gas in the combustion chamber to maintain the operating temperature as tail gas is fed through the unit. At these temperatures, the constituents in the tail gas are completely oxidized, reducing the greenhouse gas impacts.

A regenerative thermal oxidizer operates in a similar manner but includes two heat storage sections filled with ceramic heat exchange media on either side of the combustion chamber and valves to intermittently reverse the flow through unit. Depending on the flow direction, one heat storage section is always upstream of the combustion chamber and the other is downstream.

Instead of exhausting directly to the atmosphere like a traditional thermal oxidizer, the regenerative thermal oxidizer exhaust flows through the downstream heat storage section, preheating the media. When the flow is reversed, the tail gas flows through the preheated ceramic media prior to the

combustion chamber, significantly reducing the natural gas demand. Thus, high thermal efficiency can be achieved, and relatively little natural gas input is required to sustain combustion.

If membranes are used for biogas upgrading, a third stage of membranes, located inside the biogas upgrading system enclosure, can be used to remove CH_4 from the tail gas and recycle it to the front of the system. This reduces the CH_4 concentration in the tail gas (which is ultimately discharged to the atmosphere), to below 1.5 percent. As noted above, use of a third stage of membranes also results in additional CH_4 recovery, leading to additional RIN revenue.

2.6 Comparison of Upgrading Technologies

The capital costs of biogas upgrading equipment is largely dependent on the size of the equipment, with the caveat that for the more complex water wash and amine wash systems, lower biogas flow rates (typically under 1,500 scfm) are not cost competitive with membrane and PSA technologies. At higher flows, capital costs for membranes and PSA upgrading systems increase more rapidly due to the physical need for more membranes or adsorption media.

Carollo has discussed this project with Unison Solutions, a manufacturer of both membrane and amine wash biogas upgrading systems. Unison's representatives indicated that a membrane system is appropriate for this installation based on the flow rate, noting that amine wash upgrading is better suited to flows 2,000 scfm and greater. Prior discussions with Greenlane Renewables, a manufacturer of membrane, PSA, and water wash systems, indicate a similar trend for the water wash systems. Greenlane would recommend a membrane or a PSA system at flow rates similar to the NSWTP instead of a water wash system.

Operating costs of water wash and amine wash per unit of biogas treated are less than membrane and PSA systems due to the efficient separation CH_4 and CO_2 using the liquid absorption process. However, there are no known applications of amine wash and very few water wash applications for systems operating at flow rates around the NSWTP's biogas production. PSA systems generally have a lower operating cost than membrane systems due to lower energy consumption. Membranes operate at roughly 150 to 170 psi, while PSA systems operate at 100 psi or less. If the local natural gas pipeline requires an injection pressure between 100 to 160 psi, the energy use becomes more similar due to the necessity of a product gas compressor for PSA systems.

Besides the capital and operating costs, typical parameters used to compare different biogas upgrading technologies are the electrical use, labor required for operations and maintenance, other consumables, and physical layout.

The labor hours for membranes and PSA systems are very similar, while water wash and amine wash require more work to operate and maintain due to the complexity of operations and larger amount of equipment and instrumentation required. Although the amine liquid is regenerated and recirculated, it slowly breaks down and requires intermittent addition of concentrated amine and water. The water wash system has a similar requirement to purge a small portion of the water in the system to remove impurities.

Table 5 provides a summary of estimated operational requirements for each technology.

Table 5 Summary of Operational Requirements

Equipment	Operating pressure, psi	Labor, hours/year	Chemical, gallons/year	Water, MG/year	Methane capture, Percentage (%)
Membrane	150-170(1)	120-240	N/A	N/A	99.0
Pressure Swing Adsorption	90-110(2)	120-240	N/A	N/A	98.0
Water Wash	100-300(3)	260	N/A	0.8	99.0
Amine Wash	10-15(2)	260	50-100	0.2	99.9

Notes:
Abbreviations: MG - million gallons.
(1) At MGE pipeline operating pressure of 165 psi, product gas compression is unlikely to be required.
(2) At MGE pipeline operating pressure of 165 psi, product gas compression will be required.
(3) At MGE pipeline operating pressure of 165 psi, product gas compression may be required depending on the manufacturer's design.

Other points of comparison between technologies and manufacturers are process uptime and required footprint. Process uptime for all technologies is similar and can be included in a contractual performance guarantee if the manufacturer's maintenance requirements are met.

Membranes and PSA systems generally have smaller footprints at lower flows as they do not require large tanks like the wet biogas upgrading technologies. At higher flow rates, the water wash and amine wash systems can have smaller footprints due to the more efficient treatment per space in the reaction towers.

Table 6 provides a comparison of membrane, PSA, water wash, and amine biogas upgrading technologies.

Table 6 Biogas Upgrading Technology Comparison

	Advantages	Disadvantages
Membranes	▪ Simplest installation ideal for smaller applications. ▪ Combined tail gas treatment. ▪ Well-developed technology commonly used at WRRFs. ▪ Higher methane capture rates. ▪ Product gas compression is unlikely to be required.	▪ H_2S and siloxane pretreatment required. ▪ Higher O&M costs. ▪ Minimal removal of O_2 and N_2.
Pressure Swing Adsorption	▪ Simple installation ideal for smaller applications. ▪ Can remove H_2S, siloxanes, VOCs without pretreatment. ▪ Some O_2 and N_2 removal. ▪ Lower O&M costs.	▪ Requires separate tail gas treatment. ▪ Lowest methane recovery rate. ▪ H_2S and siloxane pretreatment may be required. ▪ Product gas compression required.
Water Wash	▪ Can be pre- or post- pretreatment. ▪ Higher methane recovery rate.	▪ Cost effective only at high flow rates. ▪ Product gas compression may be required. ▪ More complex operations.

	Advantages	Disadvantages
Amine	▪ Highest methane recovery rate. ▪ Tail gas can be discharged to atmosphere. ▪ Input heat can be recovered for digester heating. ▪ Can be pre- or post-pretreatment.	▪ Cost effective only at high flow rates. ▪ High temperature requirement. ▪ Product gas compression required. ▪ Unproven at lower flow rates. ▪ Most complex operations.

2.7 Recommended Technology

Based on the comparison of biogas upgrading technologies provided above, Carollo recommends MMSD use membranes as the base case technology for the Heat and Power Improvements Facilities Plan. Membrane manufacturers have a proven track record of installations at WRRFs, high methane capture efficiency, low operational complexity, and combined tail gas treatment. In addition, at the required discharge pressure of the MGE pipeline, product gas compression is not anticipated to be required. This technology recommendation is pending RNG quality requirements from MGE to confirm that the additional N_2 and O_2 removal of PSA systems is not required.

APPENDIX E

TECHNICAL MEMORANDUM 5 - PLANT-WIDE HEATING SYSTEM EVALUATION

Madison Metropolitan Sewerage District

Heat and Power Improvements Facilities Plan

TECHNICAL MEMORANDUM 5

Plant-Wide Heating System Evaluation

FINAL / December 2025

Madison Metropolitan Sewerage District

Heat and Power Improvements Facilities Plan

TECHNICAL MEMORANDUM 5

Plant-Wide Heating System Evaluation

FINAL / December 2025

Digitally signed by Lindsey I. Busch
Date: 2025.12.12 13:47:59-06'00'

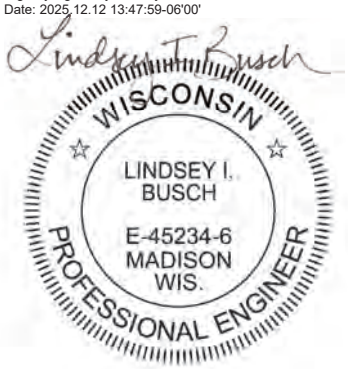

Contents

TM 5 PLANT-WIDE HEATING SYSTEM EVALUATION

5.1 Purpose and Scope 5-1
5.2 Existing Hot Water Heating System 5-2
5.2.1 Existing Hot Water Generation 5-3
5.2.2 Existing Hot Water Demands 5-6
5.3 Planning Criteria 5-10
5.3.1 Capital and Life Cycle Cost Assumptions 5-10
5.3.2 Decision Making Criteria 5-12
5.4 Null Pathway 5-13
5.4.1 Summary of Hot Water Generation 5-13
5.4.2 Summary of Hot Water Demands 5-13
5.4.3 Summary of Infrastructure Modifications 5-14
5.5 Pathway 1 - Cogeneration Evaluation 5-15
5.5.1 Overview of Pathway 1 Alternatives 5-15
5.6 Pathway 1 - Cogeneration Centralized Alternative 5-15
5.6.1 Basis of Design 5-15
5.6.2 Summary of Hot Water Demands 5-17
5.6.3 Summary of Hot Water Generation 5-19
5.6.4 Summary of Infrastructure Modifications 5-21
5.6.5 Proposed Building Modifications 5-21
5.6.6 Summary of Building Modifications 5-32
5.6.7 Greenhouse Gas Emissions 5-33
5.6.8 Capital Costs and Net Present Value 5-34
5.7 Pathway 1 - Cogeneration Decentralized Alternative 5-35
5.7.1 Basis of Design 5-35
5.7.2 Summary of Hot Water Demands 5-36
5.7.3 Summary of Hot Water Generation 5-38
5.7.4 Summary of Natural Gas Demand 5-39
5.7.5 Summary of Infrastructure Modifications 5-40
5.7.6 Proposed Building Modifications 5-41
5.7.7 Summary of Building Modifications 5-49
5.7.8 Greenhouse Gas Emissions 5-50
5.7.9 Capital Costs and Net Present Value 5-51
5.8 Pathway 2 - Renewable Natural Gas Evaluation 5-53
5.8.1 Overview of Pathway 2 Alternatives 5-53
5.9 Pathway 2 - Renewable Natural Gas Centralized Alternative 5-53
5.9.1 Basis of Design 5-53
5.9.2 Greenhouse Gas Emissions 5-56
5.9.3 Capital Costs and Net Present Value 5-56

5.10 Pathway 2 - Renewable Natural Gas Decentralized Alternative 5-58
5.10.1 Basis of Design 5-58
5.10.2 Greenhouse Gas Emissions 5-60
5.10.3 Capital Costs and Net Present Value 5-61
5.11 Decision Criteria 5-62
5.11.1 Financial Considerations 5-62
5.11.2 Operations and Maintenance 5-64
5.11.3 Implementation 5-64
5.11.4 Other 5-65
5.12 Recommendations 5-65
5.13 Combined Scoring 5-68

Appendices

APPENDIX 5A PROJECT COST ESTIMATES
APPENDIX 5B VENDOR CUTSHEETS
APPENDIX 5C LIFE CYCLE COST ESTIMATES
APPENDIX 5D SITE DIAGRAM COMPARING EXISTING AND ESTIMATED FUTURE FLOWRATES
APPENDIX 5E 2021 FACILITY HEATING, VENTILATION, AND AIR CONDITIONING STUDY
APPENDIX 5F NSWTP CAPITAL PROJECT INFRASTRUCTURE PLACEMENT PLAN

Tables

Table 5.1 Existing Hot Water Generation Design Output Capacities 5-5
Table 5.2 Estimated Current Peak Heat Demand by Building 5-7
Table 5.3 Construction Allowances, Contingencies, and Assumptions 5-11
Table 5.4 Unit Cost Assumptions 5-12
Table 5.5 Decision-Making Criteria 5-12
Table 5.6 Estimated Future Peak Heat Demand by Hot Water Loop - Null Pathway 5-13
Table 5.7 Null Pathway Net Present Value 5-15
Table 5.8 Estimated Future Peak Heat Demand - Centralized Alternative 5-18
Table 5.9 Estimated Future Hot Water Generation Output Capacity Pathway 1 (Cogen) Centralized Alternative 5-19
Table 5.10 Effluent Building - Effluent Heat Recovery Project Cost 5-26
Table 5.11 Effluent Building - Gas-Fired Equipment Project Cost 5-26
Table 5.12 Current Observed vs Future Hot Water Peak Flowrates 5-30
Table 5.13 Pathway 1 (Cogen) Centralized Alternative Building Modification Summary 5-32
Table 5.14 Design Alternatives Emissions and Energy Use Comparison Table for Pathway 1 (Cogen) Centralized 5-33
Table 5.15 Pathway 1 (Cogen) Centralized GHG Emissions 5-34
Table 5.16 Pathway 1 (Cogen) Centralized Alternative Project Cost 5-34
Table 5.17 Pathway 1 (Cogen) Centralized Alternative Net Present Value 5-35
Table 5.18 Estimated Future Peak Hot Water Demand - Decentralized Alternative 5-36

Table 5.19 Estimated Future Hot Water Generation Output Capacity Pathway 1 (Cogen) - Decentralized Alternative 5-38
Table 5.20 Estimated Future Peak Natural Gas Demand - Decentralized Alternative 5-40
Table 5.21 Current Observed Versus Future Hot Water Peak Flowrates 5-47
Table 5.22 Pathway 1 (Cogen) Decentralized Alternative Building Modification Summary 5-49
Table 5.23 Design Alternatives Emissions and Energy Use Comparison Table for Pathway 1 (Cogen) Decentralized 5-50
Table 5.24 Pathway 1 (Cogen) Decentralized GHG Emissions 5-51
Table 5.25 Pathway 1 (Cogen) Decentralized Alterative Project Cost 5-51
Table 5.26 Pathway 1 (Cogen) Decentralized Alternative Net Present Value 5-52
Table 5.27 Estimated Future Peak Heat Demand - Pathway 2 (RNG) Centralized Alternative 5-54
Table 5.28 Estimated Future Hot Water Generation Output Capacity Pathway 2 (RNG) Centralized Alternative 5-55
Table 5.29 Design Alternatives Emissions and Energy Use Comparison Table for Pathway 2 (RNG) Centralized 5-56
Table 5.30 Pathway 2 (RNG) Centralized GHG Emissions 5-56
Table 5.31 Pathway 2 (RNG) Centralized Alterative Project Cost 5-57
Table 5.32 Pathway 2 (RNG) Centralized Alternative Net Present Value 5-57
Table 5.33 Estimated Future Peak Heat Demand - Pathway 2 (RNG) Decentralized Alternative 5-58
Table 5.34 Estimated Future Hot Water Generation Output Capacity Pathway 2 (RNG) Decentralized Alternative 5-59
Table 5.35 Design Alternatives Emissions and Energy Use Comparison Table for Pathway 2 (RNG) Decentralized 5-60
Table 5.36 Pathway 2 (RNG) Decentralized GHG Emissions 5-61
Table 5.37 Pathway 2 (RNG) Decentralized Alterative Project Cost 5-61
Table 5.38 Pathway 2 (RNG) Decentralized Alternative Estimated Net Present Value 5-62
Table 5.39 Estimated Project Cost Comparison 5-62
Table 5.40 Estimated Net Present Value Comparison 5-63
Table 5.41 Review of Pathways 1 (Cogen) and 2 (RNG) Based on Decision Criteria 5-66
Table 5.42 Quantitative Scoring of Decision Criteria 5-68
Table 5.43 Combined Estimated Net Present Value 5-69
Table 5.44 Combined Quantitative Scoring of Decision Criteria 5-69

Figures

Figure 5.1 Basis of Heat Generating Equipment Operating Assumptions 5-2
Figure 5.2 Existing Site Heating Hot Water Piping Map 5-3
Figure 5.3 East Blower Engine Heat Output in 2023 5-4
Figure 5.4 Generator 1 and Generator 2 Heat Output in 2023 5-5
Figure 5.5 Total Hot Water Output in 2022 5-8
Figure 5.6 Total Hot Water Output in 2023 5-9
Figure 5.7 Current Hot Water Schematic - Null Pathway 5-14
Figure 5.8 Pathway 1 (Cogen) Centralized Alternative Building Heat Source Map 5-16

Figure 5.9	Graph of Hot Water System at Different Outside Air Temperatures Demands and Cogeneration Engine Output Pathway 1 (Cogen) Centralized Alternative	5-20
Figure 5.10	Comparison of New and Existing Boiler Footprint Within the Existing Boiler Building	5-23
Figure 5.11	Proposed Cogeneration/Boiler Building Location	5-24
Figure 5.12	Proposed Cogeneration/Boiler Building Future Hot Water Schematic - Pathway 1 (Cogen) Centralized Alternative	5-25
Figure 5.13	Potential Hot Water Buried Pipe Route from SCB2 to the Existing Boiler Building	5-28
Figure 5.14	Trend Data for Central, East, and West Loop Flowrates in 2023	5-29
Figure 5.15	Pathway 1 (Cogen) Centralized Alternative Proposed Site Piping Modifications	5-31
Figure 5.16	Pathway 1 (Cogen) Decentralized Alternative Building Heat Source Map	5-37
Figure 5.17	Pathway 1 (Cogen) Decentralized Heat Demands at Different Outside Air Temperatures	5-39
Figure 5.18	Comparison of New and Existing Boiler Footprint Within the Existing Boiler Building	5-43
Figure 5.19	Proposed Cogeneration/Boiler Building Location	5-44
Figure 5.20	Proposed Future Hot Water Schematic - Pathway 1 (Cogen) Decentralized Alternative	5-45
Figure 5.21	Pathway 1 (Cogen) Decentralized Alternative Proposed Site Piping Modifications	5-48
Figure 5.22	Proposed Future Hot Water Schematic - Pathway 2 (RNG) Centralized Alternative	5-53
Figure 5.23	Proposed Future Hot Water Schematic - Pathway 2 (RNG) Decentralized Alternative	5-60

Abbreviations

$	dollars
$/yr	cost per year
%	percent
AACE International	Association for the Advancement of Cost Engineering International
AHU	air handling unit
Carollo	Carollo Engineers
cfh	cubic feet per hour
CO_2e	carbon dioxide equivalents
DAF	dissolved air flotation
Dth	dekatherm
°F	degrees Fahrenheit
GBT	gravity belt thickener
gpm	gallons per minute
FRP	fiberglass reinforced plastic
hr	hour(s)
HVAC	heating, ventilation, and air conditioning
I&C	instrumentation and controls
kWh	kilowatt-hour
MAU	make-up air unit
MBH	thousand British thermal units per hour
MG	million gallons
MG&E	Madison Gas and Electric
mgd	million gallons per day
MMBtu	million British thermal units
MMSD	Madison Metropolitan Sewerage District
MT	metric ton(s)
NFPA	National Fire Protection Association
No.	number
NPV	net present value
NSWTP	Nine Springs Wastewater Treatment Plant
O&M	operations and maintenance
OPCC	opinion of probable capital cost
RNG	renewable natural gas
SCB2	Sludge Control Building No. 2
TM	technical memorandum
VAV	variable air volume
WAS	waste activated sludge
WDNR	Wisconsin Department of Natural Resources
yr	year

TM 5 PLANT-WIDE HEATING SYSTEM EVALUATION

5.1 Purpose and Scope

The purpose of this Technical Memorandum (TM) is to document the plantwide hot water heating systems and compare the evaluation of the following pathways and sub alternatives at the Nine Springs Wastewater Treatment Plant (NSWTP).

- **Null Pathway.** Existing operation with no major changes. Existing cogeneration engines, engine blowers, and hot water infrastructure remain in use with regular maintenance and are rebuilt, as needed. The Null Pathway anticipates no major changes to the existing hot water infrastructure other than the replacement of major equipment that is at the end of its useful life and replacing the West Boilers.
- **Pathway 1 - Cogeneration:** Replacement of existing cogeneration engines with new upsized, higher-efficiency cogeneration engines installed in a new cogeneration building. This pathway involves the installation of new boilers and associated pumping and piping and decommissioning of the engine blower.
  - Centralized Alternative - hot water will be the heat source for all process and building heating demands.
  - Decentralized Alternative - has limited hot water use. Buildings without process hot water demands are reviewed to determine whether the building will remain on the hot water system or be served with an alternative heat source.
- **Pathway 2 - Renewable Natural Gas:** Replacement of existing cogeneration engines with a biogas upgrading system for pipeline injection of renewable natural gas (RNG) and decommissioning of the engine blower.
  - Centralized Alternative - hot water will be the heat source for all process and building heating demands.
  - Decentralized Alternative - has limited hot water use. Buildings without process hot water demands are reviewed to determine whether the building will remain on the hot water system or be served with an alternative heat source.

Capital costs and net present values (NPVs) were developed for Pathway 1 and Pathway 2 as well as for the Null Pathway for comparison purposes. Each alternative was also evaluated against the decision criteria documented in TM 1. A summary of this decision criteria is included in Section 5.3.

This TM builds on the work included in the following TMs that have been prepared as part of this Heat and Power Improvements Facilities Plan:

1. TM 1 - Decision-Making Criteria, Envision™ Roadmap, Greenhouse Gas and Energy Baseline.
2. TM 2 - Biogas Production and Thermal Demand Projections.
3. TM 3 - Existing Infrastructure Evaluation.

Through discussions and workshops with Madison Metropolitan Sewerage District (MMSD), a basis of what heat generating equipment should be considered to be available to operate was established during

Workshop 7 for reviewing and comparing the pathways and alternatives. During Workshop 7, MMSD indicated it has experienced periods of time when the engine generators are offline due to maintenance or failed components. MMSD indicated it has also experienced periods of time when one of the east boilers is offline due to maintenance or failed components. The operating assumptions for the evaluation were discussed during Workshop 7 and the team agreed that both of the engine generator heat recovery units and one of the east boilers not being operational was appropriate. Based on this information, Figure 5.1 shows the operating assumptions for the evaluation based on the different pathways being evaluated.

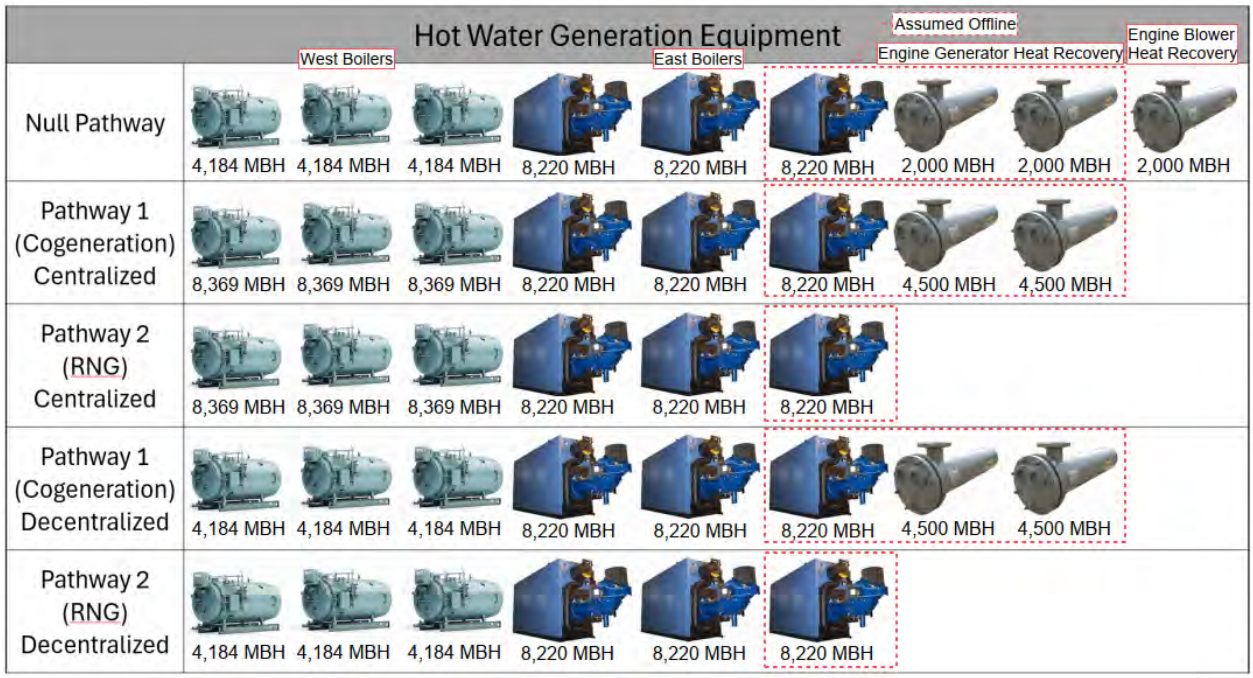

Figure 5.1 Basis of Heat Generating Equipment Operating Assumptions

This assumption was used to establish the heat generating equipment capacity for the different pathways shown in Figure 5.1. The heat generating equipment availability basis is necessary to compare against the demands and ultimately used to establish the required size of future boilers necessary to provide redundancy. The items within the dashed boxes are assumed to be offline for each pathway listed. As can be seen, once you eliminate the assumed offline equipment, there are no differences in the centralized and decentralized alternatives for Pathways 1 and 2 in regard to equipment capacity or quantity of available equipment. This will be an important consideration throughout this TM. Further details on the equipment are discussed in the TM.

5.2 Existing Hot Water Heating System

There are 30 buildings on site connected to the east, west, or central hot water loops (Figure 5.2). The west and central loops are served by hot water pumps in the Boiler Building, and the east loop is served by pumps in Sludge Control Building No. 2 (SCB2). The west and central loops are connected to the east loop through 4-inch supply and return piping located in the Solids Gallery. A single pump in SCB2 can circulate water between the east loop and the west/central loops; however, under normal conditions

minimal hot water is transferred between the loops. This 4-inch piping is not sufficiently sized to transfer enough hot water to supply the west/central hot water loops without supplemental heat being provided by the West Boilers located in the Boiler Building. The north loop is not connected to the east, west, nor central loops and is not included in the following discussion.

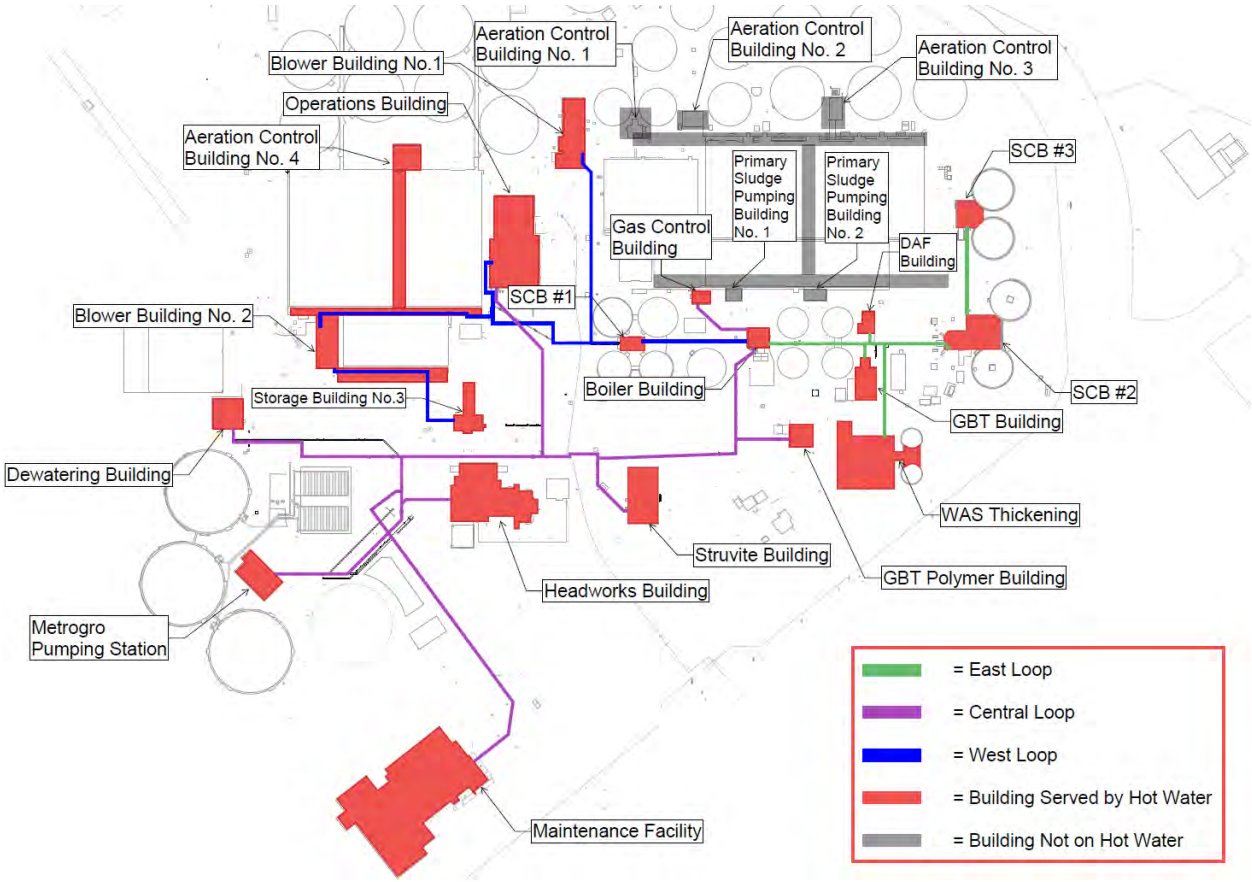

Figure 5.2 Existing Site Heating Hot Water Piping Map

5.2.1 Existing Hot Water Generation

The existing heat generating equipment at the NSWTP includes:

- The West Boilers, located in the Boiler Building.
- The East Boilers, located in SCB2.
- The engine blower heat exchangers located in Blower Building No.1.
- The engine generator heat exchangers located in SCB2.

The existing capacity information for the boilers was verified by equipment nameplate data. Capacity information for the heat exchangers was less readily available and was obtained from previous design reports. Currently, there is limited control and limited data collection for the existing hot water system that can be easily interpreted and understood. The current controls and monitoring make it difficult to have a full picture of how the existing system operates throughout the year.

5.2.1.1 Existing Engine Blower

The engine blower in Blower Building No.1 jacket water and exhaust heat recovery design capacity was noted to be 2,000 thousand British thermal units per hour (MBH) in the 10th Addition Preliminary Design Report. MMSD provided trend data that was reviewed to confirm capacity noted in the design report. The trend data suggests the existing equipment is providing 6,000-10,000 MBH. See Figure 5.3 for the graph of this output in 2023.

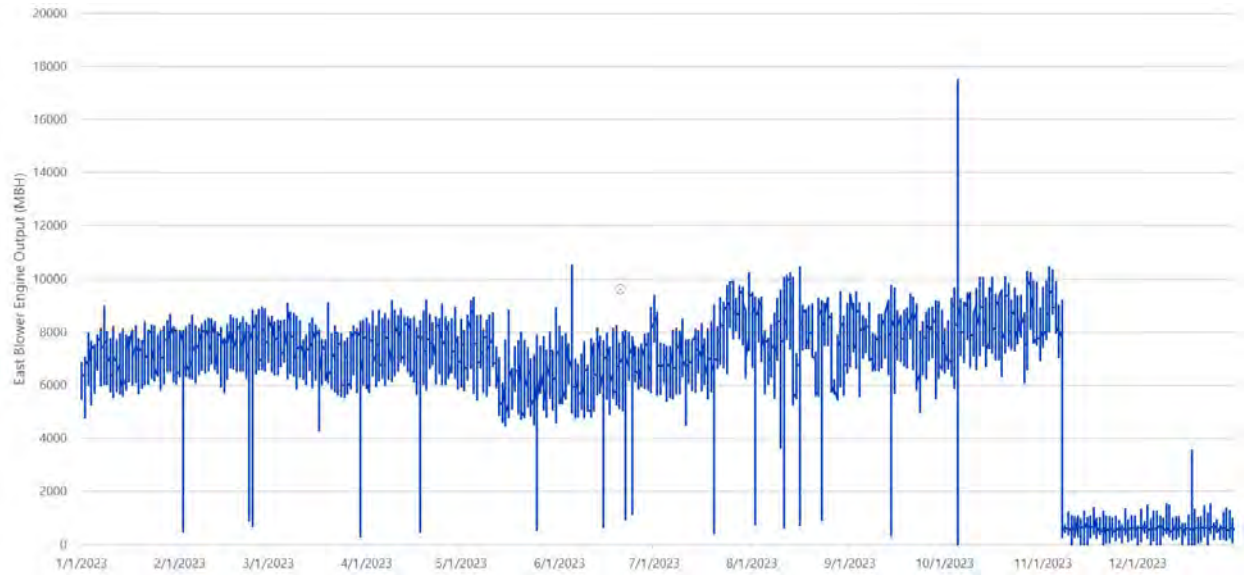

Figure 5.3 East Blower Engine Heat Output in 2023

The trend data did not include flowrate information. The flowrate was assumed to be the design condition of the pump (480 gallons per minute [gpm]) obtained from the pump nameplate. The larger than expected heat output is likely a result of a flowrate that is throttled to circulate less than the design condition. It may also be the case there are sensor calibration issues. The trend data output in Figure 5.3 is likely not reflective of the true condition and utilizing the value from the design report is a more conservative approach. Therefore, the summary in Table 5.1 uses the capacity indicated in the design report.

5.2.1.2 Existing Engine Generators

The engine generators in SCB2 jacket water and exhaust heat exchanger design capacity was also noted to be 2,000 MBH in the 10th Addition Preliminary Design Report. MMSD also provided trend data for the engine generators in SCB2. The trend data suggests the existing output of each of the generators in SCB2 is generally between 1,500-3,500 MBH. See Figure 5.4 for the graph of this output in 2023.

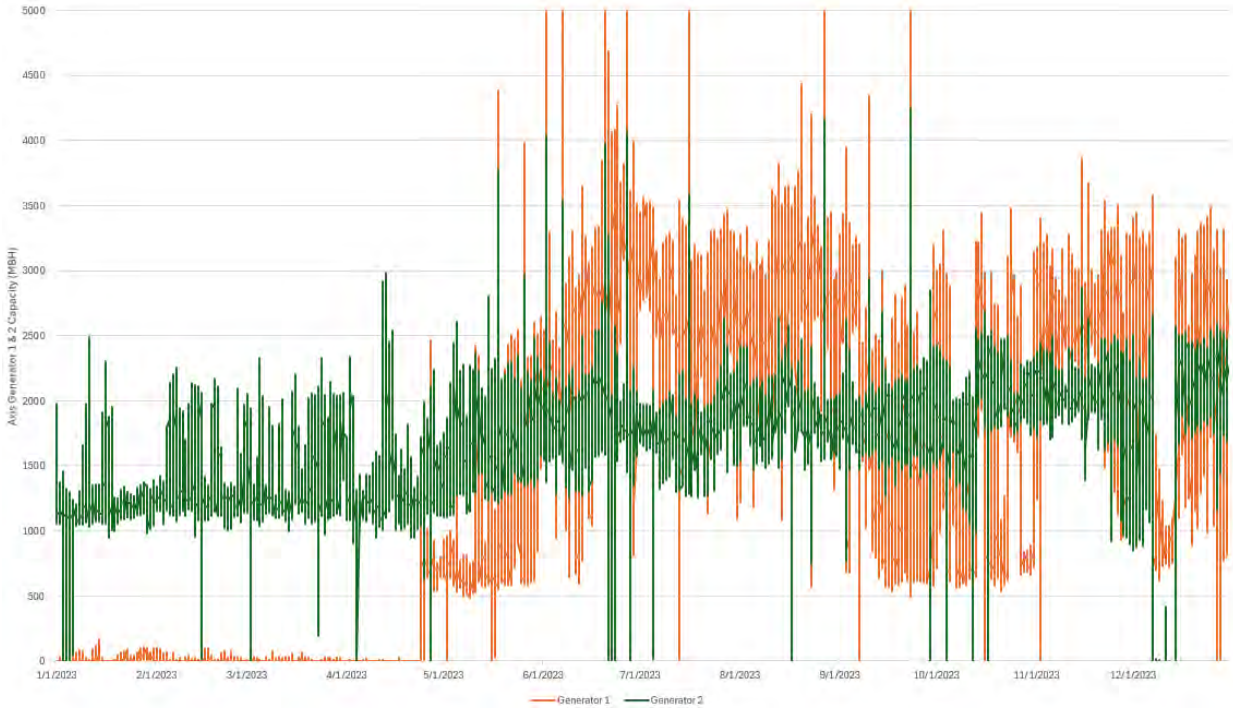

Figure 5.4 Generator 1 and Generator 2 Heat Output in 2023

The discrepancy between anticipated and actual heat generation may be related to the lube oil heat exchangers. But there may also be sensor calibration issues. Similar to the engine blower, utilizing the value from the design report is a more conservative approach. Therefore, the summary in Table 5.1 uses the capacity indicated in the design report.

5.2.1.3 Existing Hot Water Generation Output

See Table 5.1 for the design capacities of the hot water generating equipment and which loop they serve.

Table 5.1 Existing Hot Water Generation Design Output Capacities

Location	Current Hot Water Loop	Equipment	Heat Generation Output Capacity (MBH)
East Blower Building (Blower Building No.1)	West Loop	Existing Engine Heat Recovery	2,000
Boiler Building	West and Central Loops	Existing West Boiler 1	4,180
Boiler Building	West and Central Loops	Existing West Boiler 2	4,180
Boiler Building	West and Central Loops	Existing West Boiler 3	4,180
SCB2	East Loop	Existing East Boiler 4	8,220
SCB2	East Loop	Existing East Boiler 5	8,220
SCB2	East Loop	Existing East Boiler 6	8,220
SCB2	East Loop	Existing Cogeneration 1 Heat Exchanger	2,000
SCB2	East Loop	Existing Cogeneration 2 Heat Exchanger	2,000
		West and Central Loop Total	14,540
		East Loop Total	28,660
		Cumulative Total	43,200

The Boiler Building (West Boilers) and SCB2 (East Boilers) each have a control system that monitors the supply water temperature for their respective areas and stage and modulate the associated boilers to reach a desired outlet water temperature. The Boiler Building and SCB2 control systems operate independent of one another and do not communicate or share data.

The existing cogeneration heat exchangers are connected to the east hot water loop and utilize thermostatic valves to supply hot water at an outlet temperature setpoint. These valves are self-contained valves that are not controlled by the control system. These thermostatic valves can limit heat rejection to the hot water loop when the leaving hot water is maintaining the desired temperature in the east hot water loop. With these valves limiting the heat being rejected to the hot water loop, they cause the engines to overheat because the engines have more heat to reject than the hot water loop can utilize.

5.2.2 Existing Hot Water Demands

See Table 5.2 for the estimated current peak heat demand for each building connected to the hot water loops. These demands are a summary of design information obtained from existing drawings and field equipment nameplate information. Where nameplate information was not available for the existing equipment and no design information could be found in the existing drawings, the equipment capacity was estimated from size of the space it served and the size of the connected hot water pipe. The values provided for demands assume the equipment is operating at peak capacity.

Table 5.2 Estimated Current Peak Heat Demand by Building

Building	Current Hot Water Loop	Building Demand (MBH)	Process Demand (MBH)	Total Demand (MBH)	Source for Building Demand
Aeration Building 4	West	40	0	40	Nameplate
Blower Building 1	West	240	0	240	Estimate
Blower Building 2	West	125	0	125	Estimate
Boiler Building	Central	230	0	230	Drawings
DAF Building	East	117	0	117	Nameplate
East Aeration Gallery	East	15	0	15	Estimate
East Primary Gallery	East	130	0	130	Estimate
Gas Control Building	East	150	0	150	Drawings
GBT Building	East	960	0	960	Drawings
GBT Polymer Building	Central	285	0	285	Drawings
Headworks Building	Central	3,950	0	3,950	Drawings
Maintenance	Central	2,975	0	2,975	Drawings
Metrogro Pump Station	Central	830	0	830	Drawings
Operations Building (Central)	Central	860	0	860	Drawings
Operations Building (West)	West	2,588	0	2,588	Drawings
Sludge Control Bldg No. 1	West	190	430	620	Drawings
Sludge Control Bldg No. 2	East	8,290	810	9,100	Drawings
Sludge Control Bldg No. 3	East	1,180	560	1,740	Drawings
Sludge Dewatering	Central	1,460	0	1,460	Drawings
Solids Gallery	East	760	0	760	Estimate
Storage Building 3	West	100	0	100	Estimate
Struvite Building	Central	1,397	880	2,277	Nameplate
WAS Thickening Building	East	2,704	0	2,704	Nameplate
West Aeration Gallery	West	780	0	780	Estimate
West Primary Gallery	West	430	0	430	Estimate
West and Central Loop Total:		16,480	1,310	17,790	
East Loop Total:		14,310	1,370	15,680	
Cumulative Total:		30,790	2,680	33,470	

Notes:
DAF - dissolved air flotation; GBT - gravity belt thickener; WAS - waste activated sludge.

5.2.2.1 Hot Water System Trend Data From 2022-2023

MMSD provided hot water system trend data from 2022 and 2023. This trend data was reviewed to compare actual operating system demands with the estimated peak demand shown in Table 5.2. For the purposes of this review, the heat output from the heat generating equipment was assumed to generally correlate with the system demands, but this may not always be the case due to items such as:

- Lack of coordination and communication between the west/central and east loop system controls.
- Lack of clear understanding whether the generated heat is provided to the hot water system or dumped to atmosphere through an air-cooled radiator.
- Flowrate assumptions for the engine blower heat exchanger and lube oil heat exchangers.

The existing hot water system does not include flow meters or temperature sensors at every building, which makes understanding actual hot water demands for the system challenging. Hot water system flowrate and/or temperature data was available for the east, west, and central hot water loops as well as for both jacket water heat exchangers in SCB2, both lube oil heat exchangers in SCB2, and engine blower heat exchangers in Blower Building No. 1. See Figures 5.5 and 5.6 for the cumulative total hot water output from all equipment noted above in 2022 and 2023.

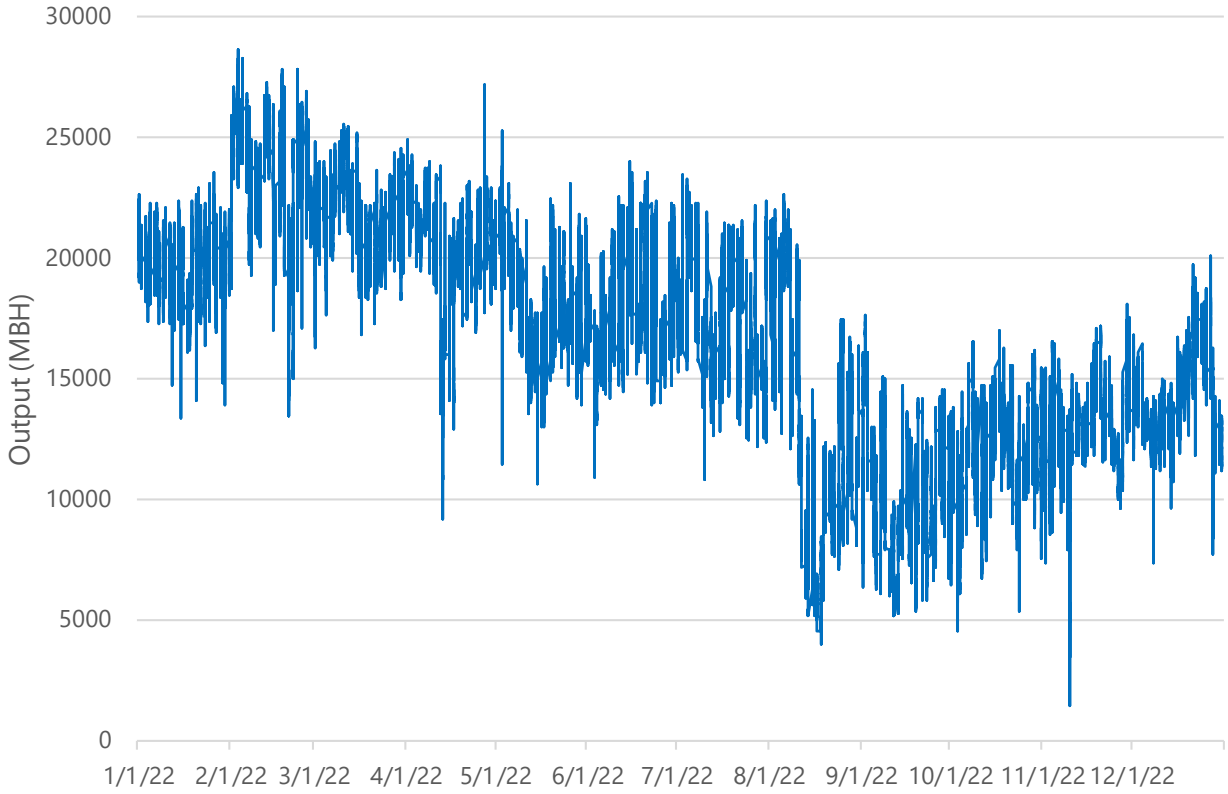

Figure 5.5 Total Hot Water Output in 2022

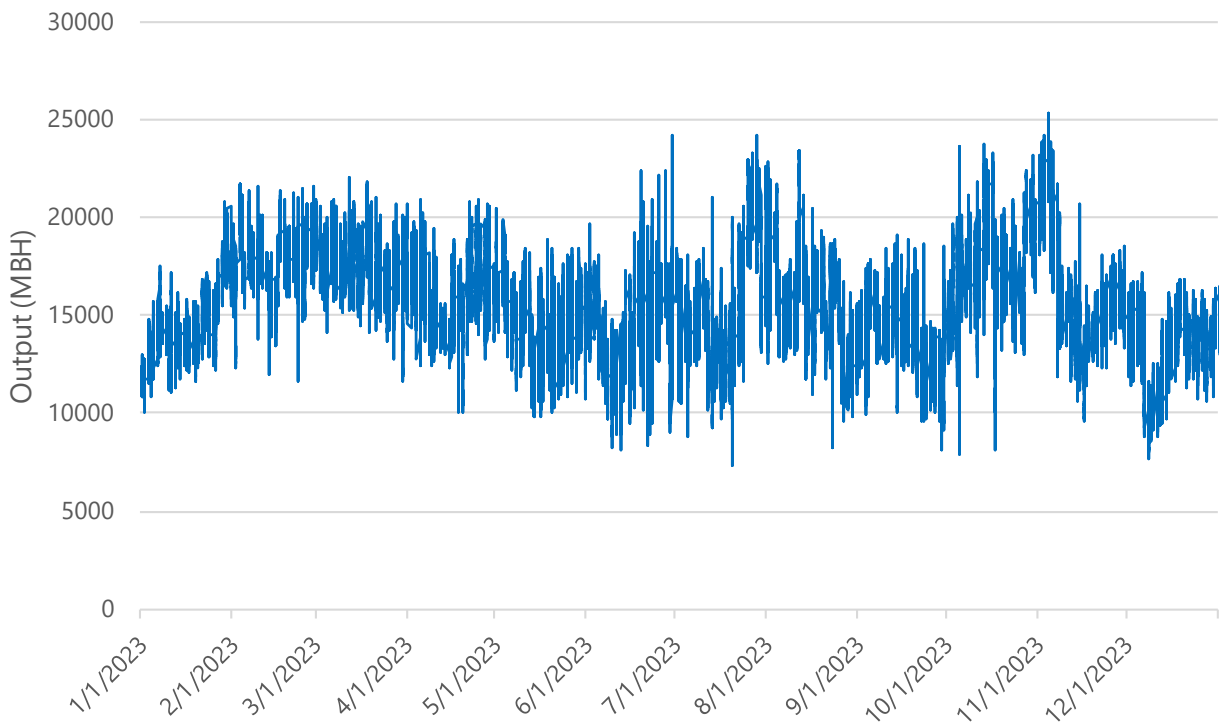

Figure 5.6 Total Hot Water Output in 2023

Peak heating demand from the 2022 and 2023 trended data is approximately 28,500 MBH. As noted in Table 5.2, the estimated current peak heat demand for the site is approximately 33,500 MBH. The estimated peak demand is approximately 5,000 MBH higher than the observed peak in the trend data from 2022 to 2023. This difference is likely related to conservative sizing of equipment for the design conditions, which were used in Table 5.2, and system diversity, where only a portion of the equipment is operating, and the data assumptions mentioned previously.

During summer periods, the plant often produces more heat than is required. The summer heating demands include the struvite drying process, digester heat, and the existing absorption chiller. In the review of the pathways and sub alternatives there will be discussion about how the different pathways will affect the heat surplus.

5.2.2.2 Summary of Deficiencies

The following is a summary of deficiencies identified in discussions, previous reports and TMs (TM 3). These deficiencies and potential solutions to these deficiencies are discussed in this TM.

1. There is no centralized hot water control system to stage, sequence, and modulate the heat generating equipment and end use equipment. This lack of centralized control results in issues with maintaining temperature in the hot water loops. The system requires extensive operator knowledge for efficient operation, maintenance, and troubleshooting.
2. Piping and pumping infrastructure issues such as large pressure drop in the existing buried piping, undersized hot water distribution pumps, lack of modulating hot water control valves, and low gas

pressure availability at the West Boilers results in issues maintaining temperature in the hot water loops.

a. For example, typical hot water supply temperature is in the range of 200-205 degrees Fahrenheit (°F). At times during winter operations, it has been observed by MMSD that the west/central hot water loop temperature drops to an unacceptable temperature (<195°F). This most commonly occurs when multiple boilers are called to run, natural gas is supplementing the system through the gas blending system, and there is a high heat demand on the west/central loop. In most instances when the hot water loop temperature drops to an unacceptable temperature, the struvite drying process is also operating. Currently, to address the low hot water loop temperature MMSD shuts down the struvite drying process. This issue is likely the result of many factors, including low gas supply, governed gas treatment (maximum of 38,000 cubic feet per hour [cfh] of biogas through the treatment skid), and high demands on the hot water system caused by both struvite and all other demands calling for heat on the west/central loop.

3. The current piping and pumping arrangements are not sufficiently sized to transport the flow of water between the west/central hot water loop and the east hot water loop. For this reason, the west/central and east hot water loops operate mostly independent of one another.

5.3 Planning Criteria

5.3.1 Capital and Life Cycle Cost Assumptions

The economic analyses for the two alternatives include the following elements:

- Capital costs.
- Operations and Maintenance (O&M) costs.

Cost estimates were prepared using pricing from similar projects, vendor quotes, and conceptual unit costs. A life cycle cost was developed for each alternative to enable an analysis comparison.

5.3.1.1 Capital Cost Estimating Assumptions

Cost estimating was conducted by identifying equipment and construction costs in 2025 dollars. The total project cost estimates include direct and indirect costs as well as engineering, administrative, and legal services costs. Direct costs are provided for major project components and are based on equipment quotes or unit costs. Equipment quotes were solicited for the major pieces of equipment associated with each alternative. Allowances for structural, architectural, electrical, or instrumentation work are based on the total of the direct costs and differ for the alternatives, see Table 5.3 for the allowance used for each Pathway and Alternative. An estimating contingency is added to the Association for the Advancement of Cost Engineering (AACE) International Class 4 level estimate to produce the total direct costs.

Table 5.3 Construction Allowances, Contingencies, and Assumptions

Criteria	Pathway 1 Centralized Alternative	Pathway 1 Decentralized Alternative	Pathway 2 Centralized Alternative	Pathway 2 Decentralized Alternative(1)
Construction Allowances				
Structural/Architectural Allowance (% of direct costs)	10%	10%	10%	20%
Mechanical Systems Allowance (HVAC, plumbing, etc.) (% of direct costs)	25%	25%	25%	45%
Electrical, I&C, Programming Allowance (% of direct costs)	20%	20%	20%	40%
Piping/Valve Allowance (lump sum)	varies	varies	varies	varies
Construction Contingency (% of direct costs, including allowances)	30%	30%	30%	30%
General Conditions, Contractor Mark-Ups, Escalation				
General Conditions Allowance (% of direct costs, including allowances)	15%	15%	15%	15%
Contractor Overhead and Profit (% of direct costs, including allowances)	20%	20%	20%	20%
Bonds and Insurance (% of direct costs, including allowances)	3%	3%	3%	3%
Engineering and Administrative Costs				
Engineering, Legal, and Administrative Fees (% of construction costs)	15%	15%	15%	15%
Construction Management (% of construction costs)	10%	10%	10%	10%

Notes:
% - percent; HVAC - heating, ventilation, and air conditioning; I&C - instrumentation and controls.
(1) The factors for the Pathway 2 Decentralized alternative were adjusted to more accurately capture the costs of this alternative.

5.3.1.2 Life Cycle Cost Estimating Assumptions

Life cycle costs were calculated for each pathway and sub alternative. Life cycle cost development assumed linear increases in the cost of energy, labor, and materials throughout the planning period.

All future costs were adjusted for inflation by applying an assumed annual escalation rate of 3.5 percent to the current costs for each year of the planning period. For comparison, all costs were calculated in terms of NPV for a planning analysis starting with construction in 2028 and operation in 2029 through 2048 (for a total operation of 20 years). A 2.5 percent discount rate was used based on the Wisconsin Department of Natural Resources' (WDNR) Municipal Wastewater Facility Planning website.

Net present value unit cost assumptions are summarized in Table 5.4.

Table 5.4 Unit Cost Assumptions

Parameter	Value	Unit
Escalation		
Escalation Rate	3.5	%
Discount Rate	2.5	%
Utility Cost Assumptions		
Electricity (MG&E) Rate(1)	$0.111	$/kWh
Natural Gas Rate(2)	$5.461	$/MMBtu, $/Dth
Cost/Revenue Assumptions		
Annual Maintenance Cost	2-4%	of equipment HVAC system costs

Notes:
$ - dollars; Dth - dekatherm; kWh - kilowatt-hour; MG&E - Madison Gas and Electric; MMBtu - million British thermal units.
(1) Electricity rate calculated from MMSD's 2024 MG&E electricity bill (including demand charges) divided by MMSD's electricity usage in kWh.
(2) Natural gas rate calculated from MMSD's 2024 natural gas cost divided by MMSD's 2024 natural gas usage.

5.3.2 Decision Making Criteria

The decision-making criteria for the project were established in the Kickoff and Visioning Workshop 0/1 and documented in TM 1 - Decision-Making Criteria, Envision™ Roadmap, Greenhouse Gas and Energy Baseline. A summary of the final categories is shown in Table 5.5. Weighting of each criterion is based on the scoring exercise that was performed during Workshop 0/1. The percent weighting of each criteria is based on the number of votes it received from MMSD staff in Workshop 0/1.

Table 5.5 Decision-Making Criteria

Category	Criteria	Description/Evaluation Metric	Weighting
Financial	Capital Costs	Capital Cost (2025 $).	14%
	Life Cycle Costs	Capital Cost + Lifetime O&M Costs - Revenue (2024 $).	20%
O&M	Operational Complexity/Difficulty	Complexity of and operator familiarity with process and associated equipment (qualitative score).	14%
	Operational Response/Risk/Uptime	Technology reliability, resilience, and issue response time requirements (qualitative score).	9%
Implementation	Future Site Flexibility	Ability to fit on the existing site and integrate with existing infrastructure (qualitative score).	9%
Other	Market Risk	Risk related to potential volatility in credit markets for Pathways 1 and 2 (qualitative score).	12%
	Energy Recovery	Energy capture efficiency.	10%
	Outside Dependence	Ability to address potential issues internally and level of reliance on outside resources (qualitative score).	12%

Life cycle cost was the highest priority criteria by MMSD staff, followed by capital cost and operational complexity/difficulty, next is energy recovery, and finally market risk and outside dependence.

These categories will be used to determine the pathway and sub alternative preferred by MMSD. The individual sections describe the considerations for each pathway.

5.4 Null Pathway

The Null Pathway anticipates no major changes to the existing hot water infrastructure other than the replacement of major equipment that is at the end of its useful life. The West Boilers are 45+ years old, and during Workshop 7 it was decided that these boilers will be removed and replaced in all future scenarios. The Null Pathway assumes the three East Boilers and two existing engine generators in SCB2 and the engine blower will remain. It is assumed the existing distribution pumps for all hot water loops will remain and would be replaced in-kind as needed in the future. The Null Pathway assumes all the buildings currently served by the hot water loop will remain as they are currently connected. The Null Pathway also assumes none of the existing hot water control, operational, or other deficiencies will be addressed.

5.4.1 Summary of Hot Water Generation

The Null Pathway heat generating equipment includes the existing East Boilers, existing engine generator heat recovery, new West Boilers, and existing engine blower heat recovery. The hot water generating capacity for the Null Pathway is the same as presented in Table 5.1.

5.4.2 Summary of Hot Water Demands

The estimated demands for the Null Pathway include the same buildings as noted in Table 5.2, but the totals have been adjusted to reflect the increase in demands associated with the future ventilation modifications as established in the 2021 Facility HVAC Study.

Table 5.6 Estimated Future Peak Heat Demand by Hot Water Loop - Null Pathway

Hot Water Loop	Building Demand (MBH)	Process Demand (MBH)	Total Demand (MBH)	Heat Generation Capacity Sufficient to Meet Demand? (Yes/No)
West and Central Loop Total	17,410	1,310	18,720	No
East Loop Total	15,950	1,370	17,320	Yes
Cumulative Total	33,360	2,680	36,040	

A schematic for the current flow arrangement is shown in Figure 5.7.

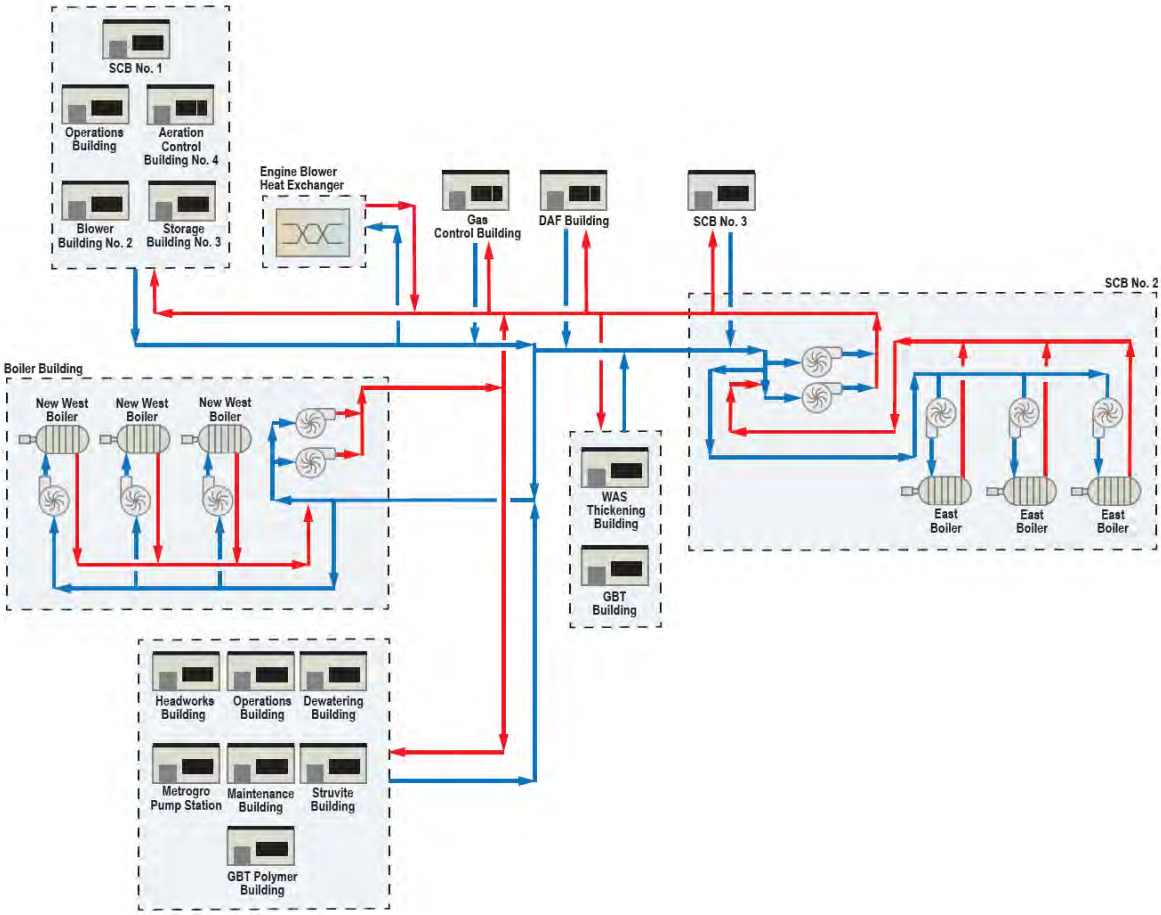

Figure 5.7 Current Hot Water Schematic - Null Pathway

The process loads are the same as the existing process loads in Table 5.2. This is because the values presented are peak loads. While the total amount of hot water required will increase over time, the peak quantity of heat lost from the digestion tanks should remain constant. Based on the totals in Table 5.6, there is sufficient generation capacity serving the east loop to meet the future demands, but there is not sufficient generation capacity serving the west and central loops to meet the future demands. The cumulative total generation capacity is larger than the cumulative total future demands, but as identified in the summary of deficiencies, these loops currently operate independently. The Null Pathway does not address any of the system deficiencies noted previously. Therefore, this pathway would have difficulty meeting future demands.

5.4.3 Summary of Infrastructure Modifications

If the Null Pathway was selected, several design items would need to be addressed in detailed design. The infrastructure modifications associated with the Null Pathway include:

- Three new boilers and associated hot water piping, gas piping, valving, accessories, and power and controls.
- New hot water pumps associated with the new West Boilers.
- It is assumed the new boilers to replace the existing West Boilers will fit in the existing Boiler Building.

The NPV for the Null Pathway evaluated the costs associated with the hot water system over the estimated 20-year life of the equipment from 2029 through 2048. The estimated project cost in Table 5.7 was escalated to 2028 dollars. A summary table presenting the NPV of capital and operating costs over a 20-year life is shown in Table 5.7. Cost is expressed as NPV showing the value of the overall project in 2028 dollars. Assumptions used for the analysis are summarized in Section 5.3. The detailed NPV calculations are provided in Appendix 5C.

Table 5.7 Null Pathway Net Present Value

Description	Null Pathway Costs
Estimated Project Cost (2028)	$3,614,000
Annual Costs	$464,000
Natural Gas Cost Hot Water System, ($/yr)	$406,000
Electrical Cost, ($/yr)	$24,000
Heating Hot Water System O&M Cost, ($/yr)	$34,000
Net Annual Costs/(Revenues), ($/yr)	$464,000
Net Present Value	$12,907,000

Notes:
$/yr - cost per year.

5.5 Pathway 1 - Cogeneration Evaluation

5.5.1 Overview of Pathway 1 Alternatives

Pathway 1 assumes all of the digester gas produced on site is utilized in two new centralized cogeneration engines for production of electricity and heat, with hot water boilers providing supplemental heat when needed. Within Pathway 1, there are centralized and decentralized alternatives. The centralized alternative utilizes hot water as the heat source for all buildings identified below. For the decentralized alternative, there is limited hot water use. Buildings without hot water process heat demands are reviewed to determine whether the building will remain on the hot water system or be served with an alternative heat source, such as gas-fired or electrically heated equipment. It was decided in Workshops 5 and 7 that the buildings currently served by the north hot water loop, other than the Effluent Building, would not be considered in this TM. The north loop hot water piping has previously failed in some locations and there are plans to remove many of the buildings from this loop in the future. Therefore, in Workshop 6 and 7 it was decided that this loop would not be considered as a part of this study. Only the Effluent Building, which would remain if the other buildings on the North Loop were removed, will be discussed.

5.6 Pathway 1 - Cogeneration Centralized Alternative

5.6.1 Basis of Design

The centralized alternative assumes hot water will be the heat source for all process and HVAC heating demands within the noted buildings indicated in Figure 5.8 and Table 5.8. Some buildings included in the centralized alternative are not currently heated and some currently utilize an alternative heat source (such as electric heat). Figure 5.8 indicates buildings not currently served by hot water that will be added to the plantwide hot water loop. The 2021 Facility HVAC study recommended adding ventilation or ventilation modifications to these buildings. These modifications do not need to be added to the hot water system, but the system should be sized to accommodate this potential demand in the future.

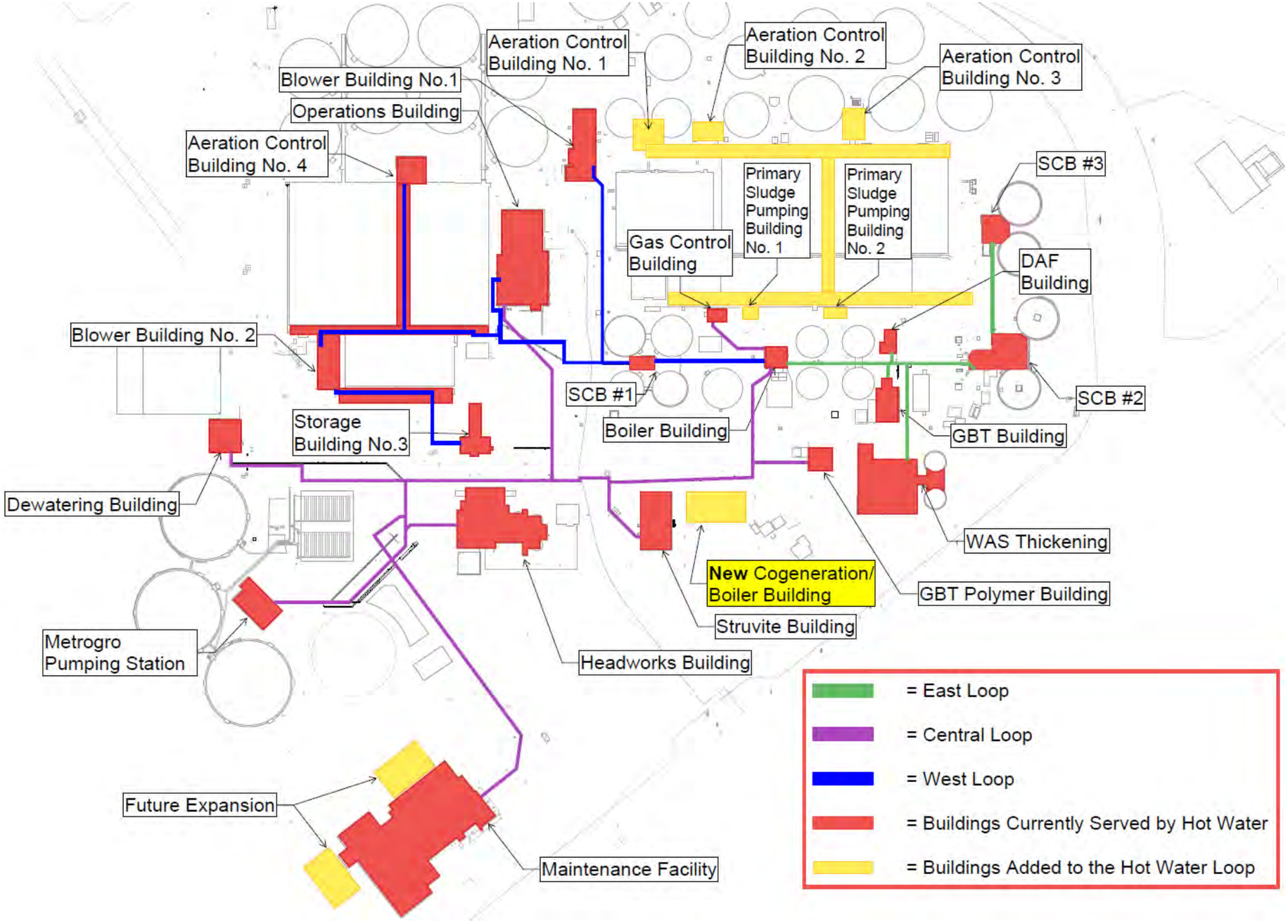

Figure 5.8 Pathway 1 (Cogen) Centralized Alternative Building Heat Source Map

5.6.2 Summary of Hot Water Demands

The heating demand in Table 5.8 reflects anticipated future process demands and future ventilation modifications as established in the 2021 Facility HVAC Study. The 2021 Facility HVAC Study can be found in Appendix 5E. The 2021 Facility HVAC Study describes proposed ventilation modifications that would be required for National Fire Protection Association (NFPA) 820 compliance for each building. These modifications and the associated changes in heat demand contribute to the increased estimated future peak heat demand for the hot water system. Table 5.8 shows the estimated future peak heat demand for the centralized alternative by building. The values provided reflect peak design conditions, which occur in the winter, for both building and process demands.

Table 5.8 Estimated Future Peak Heat Demand - Centralized Alternative

Building	Future Loop	Building Demand (MBH)	Process Demand(3) (MBH)	Total Demand (MBH)
Aeration Building 1(1)	**East**	**210**	**0**	**210**
Aeration Building 2(1)	**East**	**450**	**0**	**450**
Aeration Building 3(1)	**East**	**300**	**0**	**300**
Aeration Building 4	West	40	0	40
Blower Building 1	West	240	0	240
Blower Building 2	West	655	0	655
Cogeneration/Boiler Building(1)	**Central**	**60**	**0**	**60**
DAF Building	East	220	0	220
East Aeration Gallery(1)	**East**	**1,365**	**0**	**1,365**
East Primary Gallery(1)	**East**	**270**	**0**	**270**
Fleet Storage Expansion(1)	**Central**	**705**	**0**	**705**
Gas Control Building	East	340	0	340
GBT Building	East	960	0	960
GBT Polymer Building	Central	220	0	220
Headworks Building	Central	3,380	0	3,380
Maintenance Shop Expansion(1)	**Central**	**570**	**0**	**570**
Maintenance	Central	2,975	0	2,975
Metrogro Pump Station	Central	830	0	830
Operations Building (Central)	Central	860	0	860
Operations Building (West)	West	2,588	0	2,588
Primary Sludge Pumping Building 1(1)	**East**	**220**	**0**	**220**
Primary Sludge Pumping Building 2(1)	**East**	**270**	**0**	**270**
Sludge Control Bldg No. 1	West	190	430	620
Sludge Control Bldg No. 2	East	8,200	810	9,010
Sludge Control Bldg No. 3	East	1,320	560	1,880
Sludge Dewatering	Central	1,460	0	1,460
Solids Gallery	East	490	0	490
Storage Building 3	West	120	0	120
Struvite Building	Central	1,270	880	2,150
WAS Thickening Building	East	2,780	0	2,780
West Aeration Gallery	West	1,960	0	1,960
West Primary Gallery	West	560	0	560
West and Central Loop Total:		18,680	1,310	19,990
East Loop Total:		17,400	1,370	18,770
Cumulative Total:		36,080	2,680	38,760
Totals if Steam Boiler Supplied Loads are Served by Hot Water(2)		36,080	8,680	44,760

Notes:
(1) Bold data are new buildings added compared to Table 5.2.
(2) This value reflects the demand of the acid digesters, which are currently supplied by the steam boilers in the WAS Thickening Building and are not currently connected to the hot water system.
(3) The process loads are the same as the existing process loads in Table 5.2. This is because the values presented are peak loads. While the total amount of hot water required will increase over time, the peak quantity of heat lost in the digestion tanks should remain constant.

5.6.3 Summary of Hot Water Generation

The intent of this alternative is to utilize the heat recovered from the generators to the greatest extent possible. Based on discussion with MMSD, and noted at the beginning of this TM, the peak heating demands cannot rely on either of the cogeneration engines or the largest boiler in SCB2. The remaining existing and new equipment will be sized to provide sufficient heat to meet the peak heating demand. This basis was used to establish the capacity for the new West Boilers. Details of these heat generating sources are shown in Table 5.9.

Table 5.9 Estimated Future Hot Water Generation Output Capacity Pathway 1 (Cogen) Centralized Alternative

Location	Equipment	Heat Generation Output Capacity (MBH)	Remarks
New Cogeneration/ Boiler Building	New West Boiler 1	8,400	New upsized boiler to account for base assumption of both generators and one of the East Boilers being offline
New Cogeneration/ Boiler Building	New West Boiler 2	8,400	New upsized boiler to account for base assumption of both generators and one of the East Boilers being offline
New Cogeneration/ Boiler Building	New West Boiler 3	8,400	New upsized boiler to account for base assumption of both generators and one of the East Boilers being offline
SCB2	Existing East Boiler 4	8,220	Existing equipment; no change
SCB2	Existing East Boiler 5	8,220	Existing equipment; no change
SCB2	Existing East Boiler 6	8,220	Existing equipment; no change
New Cogeneration/ Boiler Building	New Cogeneration Engine 1 Heat Exchanger	4,500	Future equipment; estimated capacity
New Cogeneration/ Boiler Building	New Cogeneration Engine 2 Heat Exchanger	4,500	Future equipment; estimated capacity
Total Heat Generation Capacity		58,860	Includes all heat generation equipment being operational
Design Basis Heat Generation Capacity		41,640	Assumes both generators and one of the East Boilers is offline

Notes:
(1) The heat generation for each generator will increase with digester gas production. The heating output capacity value listed will increase to 5,140 MBH over time.

The total heat generation capacity (58,850 MBH) exceeds the total hot water demand (38,758 MBH) by 20,065 MBH. In this situation, there is approximately 50 percent excess heat generating capacity above the cumulative total demands. The design basis heat generation capacity (41,640 MBH) with one boiler and both engines offline exceeds the total hot water demand (38,858 MBH) by 2,855 MBH. In this situation, there is approximately 7 percent excess heat generating capacity above the cumulative total demands. To transport this heating capacity throughout the site, piping and pumping modifications are required.

In this alternative, the new cogeneration engines potential heat output is approximately 2.5 times more compared with the current engines. Although the centralized alternative will now permit heat produced by the cogeneration engines to be utilized throughout the plant, there will still be a portion of the year when there is excess heat. Operation and maintenance calculations were performed assuming anytime the

outside air temperature exceeds 50°F, the HVAC system will not require hot water. Process loads are assumed to require heat year round. The following is information regarding excess heat:

- In Madison, Wisconsin historically, approximately 45 percent of the year the outside air temperature is above 50°F.
- For this alternative, anytime the outside air temperature is above approximately 34°F, the total heat the cogeneration engines can produce (11,000 MBH) would exceed the hot water system demands (both building and process).
- The new cogeneration engines (11,000 MBH) can produce approximately 75 percent more heat than is required by the process system alone (2,680 MBH, excluding the acid digesters).
- The new cogeneration engines (11,000 MBH) can produce approximately 83 percent more heat than is required by the absorption chiller (1,860 MBH) at full output.
- During periods of excess heat in the hot water loop, the new air-cooled radiator associated with the cogeneration engines will reject the excess heat to the atmosphere.

Figure 5.9 is a graphical representation of the hot water system heat demands reflecting both building and process demands. The process demands are assumed to be the winter condition for this comparison, although they will vary between summer and winter, but the winter value was used as a conservative assumption. The building demands vary based on outside air temperatures. The line for the heat recovered from the cogeneration engines is for the full output of both engines running. Where the cogeneration output line intersects the demand line excess heat produced by the cogeneration engines will be rejected to atmosphere.

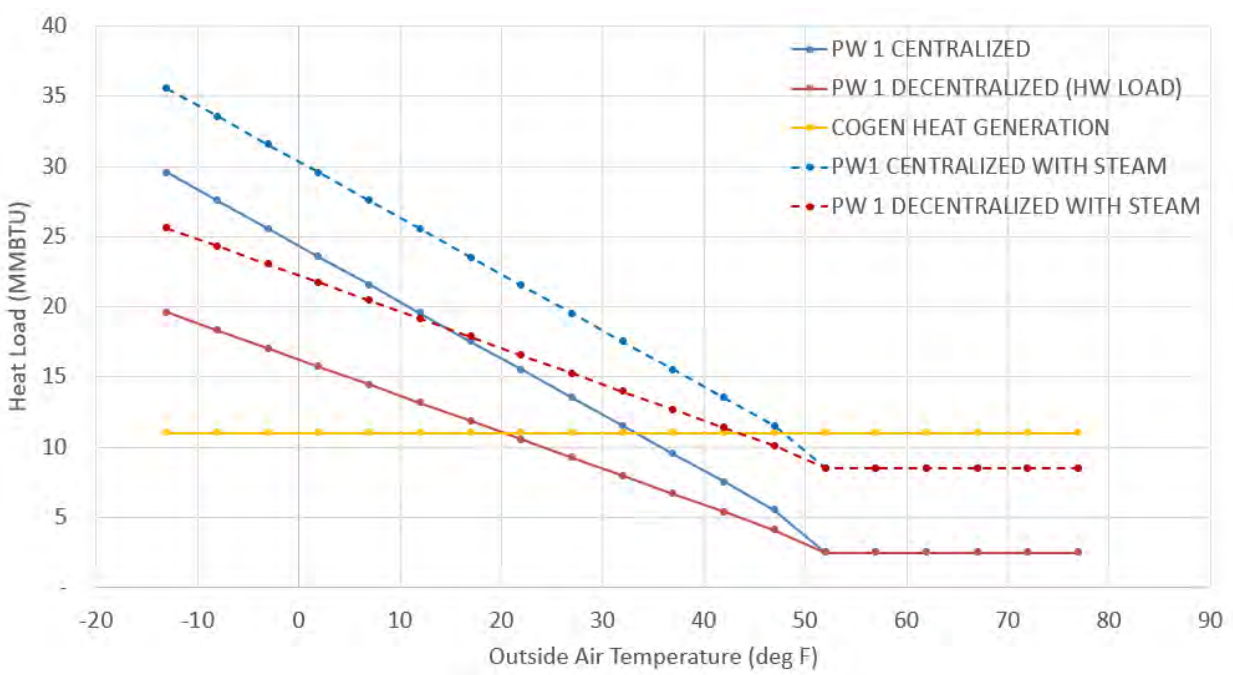

Figure 5.9 Graph of Hot Water System at Different Outside Air Temperatures Demands and Cogeneration Engine Output Pathway 1 (Cogen) Centralized Alternative

5.6.4 Summary of Infrastructure Modifications

A summary of infrastructure modifications required to implement the Centralized Alternative for Pathway 1 include:

1. New Cogeneration/Boiler Building to house the new equipment.
2. Installing new boilers, pumps, and piping. The new West Boilers will be located in the new Cogeneration/Boiler Building. Details of the new boiler sizing are discussed in the Cogeneration/Boiler Building section below.
3. Installing new supply and return piping to serve buildings currently unheated or currently using an alternative heat source; including Aeration Control Building No. 1, No. 2 and No. 3, Cogeneration/Boiler Building, East Aeration Gallery, East Primary Gallery, Primary Building 1, and Primary Building 2. Additional details are discussed in the Site Piping section below.
4. Installing new ventilation equipment (heating only) to achieve the ventilation modifications noted in the 2021 Facility HVAC Study.
5. Installing upsized site piping to accommodate the increased flow to certain buildings and through sections of pipe to serve all portions of the centralized alternative, so one common hot water loop serves all buildings. Additional details are discussed in the Site Piping section below.
6. Installing a new dedicated hot water line from the new Cogeneration/Boiler Building to SCB2.
7. Installing improved controls to monitor hot water demands and generation with the ability to cycle and modulate all heat generating equipment. This information will inform a centralized control system to monitor and control the hot water system throughout the site.
8. Installing temperature and flow monitoring devices at each boiler and cogeneration engines heat exchanger connected to the hot water system.

5.6.5 Proposed Building Modifications

Proposed modifications for each building are found below. A summary of the building specific information is included in Table 5.13.

The following buildings are currently served by hot water and there are no hot water system or infrastructure modifications other than monitoring and control improvements:

1. Aeration Control Building No. 4.
2. GBT Building.
3. GBT Polymer Building.
4. Headworks Building.
5. Metrogro Pump Station.
6. Sludge Control Building No. 1.
7. Sludge Control Building No. 3.
8. Sludge Dewatering Building.
9. Storage Building No. 3.
10. Struvite Building.

The following buildings include ventilation and heating equipment modifications reflecting the 2021 HVAC Study. These buildings currently do not have any hot water equipment or piping. New hot water piping will be required to serve the building:

1. Aeration Control Building No. 1.
2. Aeration Control Building No. 2.
3. Aeration Control Building No. 3.
4. East Aeration Gallery (Aeration Gallery No. 1).
5. East Primary Gallery.
6. Primary Sludge Pumping Building No. 1.
7. Primary Sludge Pumping Building No. 2.

The following buildings include ventilation and heating equipment modifications reflecting the 2021 HVAC Study. These buildings currently have hot water equipment that will be replaced with larger equipment:

1. DAF Building.
2. Gas Control Building.
3. West Aeration Gallery (Aeration Gallery No. 2).
4. West Primary Gallery.

The following buildings include more detailed discussion:

5.6.5.1 Blower Building No. 1

Future modifications include the removal of the existing engine-driven blower, heat exchanger, associated pumps, and unit heaters. Modifications include the installation of new appropriately sized hot water unit heaters. The HVAC upgrades for this building are included in the Liquid Processing Phase 2 project. Any future modifications for this building will be coordinated with the Liquid Processing Phase 2 project.

5.6.5.2 Blower Building No. 2

Future modifications include new ventilation and heating equipment reflected in the 2021 Facility HVAC Study. The existing hot water piping would be modified to accommodate the new equipment. Similar to Blower Building No. 1, any future modifications for this building will be coordinated with the Liquid Processing Phase 2 project.

5.6.5.3 New Cogeneration/Boiler Building

The centralized alternative requires new larger boilers because of the increased heat demand of the centralized alternative. Due to the increased heat output of these boilers, the footprint of the new boilers increased in size compared to the existing boilers. The new boilers are too large to fit within the existing Boiler Building. A comparison of the new and existing boilers can be seen in Figure 5.10.

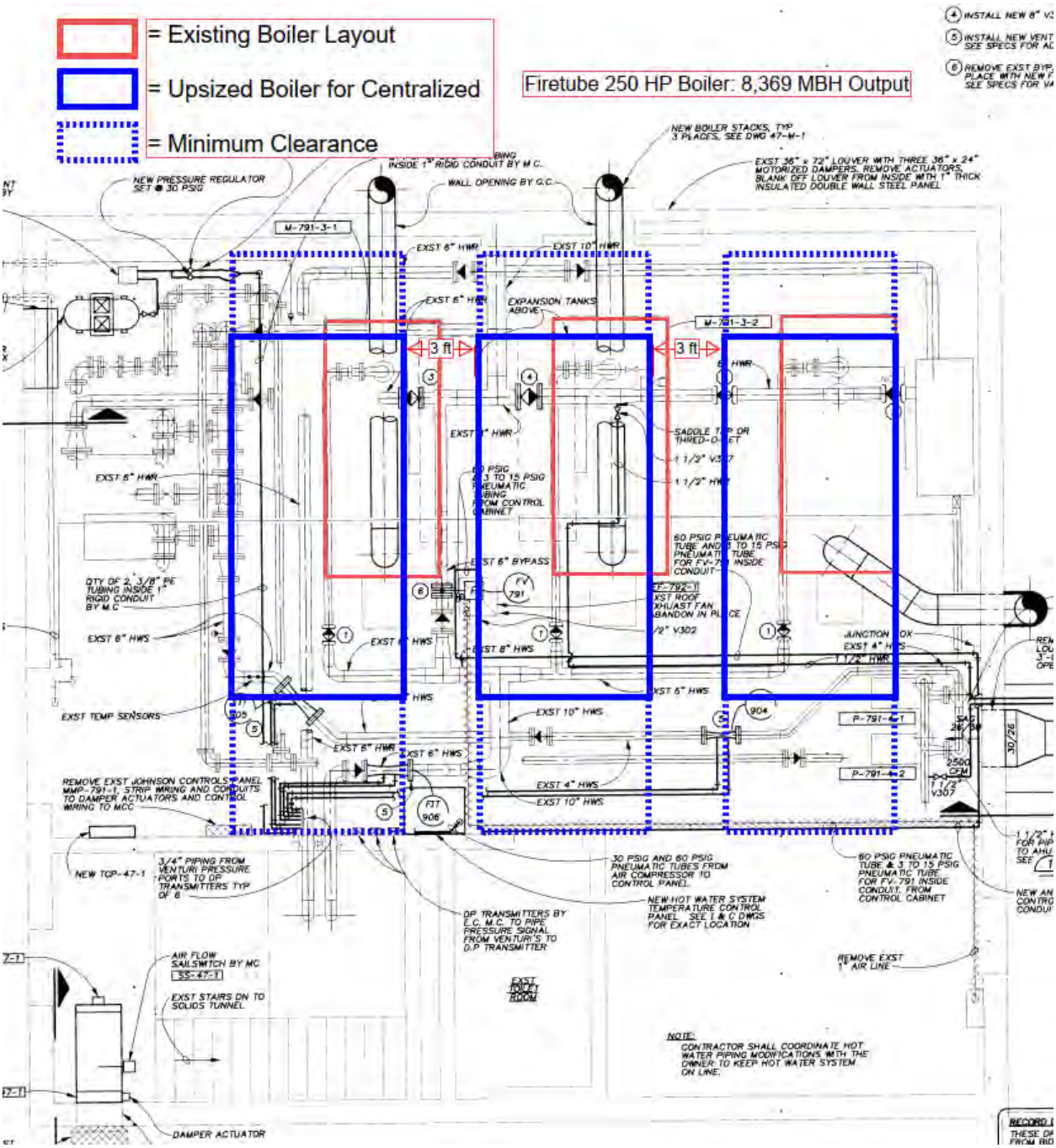

Figure 5.10 Comparison of New and Existing Boiler Footprint Within the Existing Boiler Building

For the new boilers, scotch marine (fire-tube) boilers from two different manufacturers (Cleaver Brooks and Hurst) were used as the basis of the proposed layout. Water-tube boilers were considered because they commonly have a smaller equipment footprint compared with firetube boilers; however, water tube boilers are generally considered less robust than a scotch marine style boiler and tend to have shorter equipment life when fired on digester gas.

The size of the new building to house the boilers is based around Cleaver Brooks boilers because this maintains the same manufacturer as the plant has currently. A cutsheet of the boiler selection used for this layout is included in Appendix 5B. During detailed design, alternate boiler manufacturers will be reviewed however, for this study Cleaver Brooks was used as the basis for the space considerations.

As a part of Pathway 1, the new cogeneration engines are planned to be installed in a new building. The new boiler building is proposed to be included as part of a new cogeneration building. It is best design practice to locate all heat generation in similar building, but not absolutely necessary. Locating the heat generating equipment in a similar building would make pumping and piping more manageable. The intent is for all existing hot water equipment in the existing Boiler Building will be removed. The Capital Project Infrastructure Placement Plan, found in Appendix 5F, included a proposed location for a new Heat and Power Building. See Figure 5.11 for the proposed location for the new Cogeneration/Boiler Building. Additional alternatives can be considered for the location of future boilers as a part of detailed design.

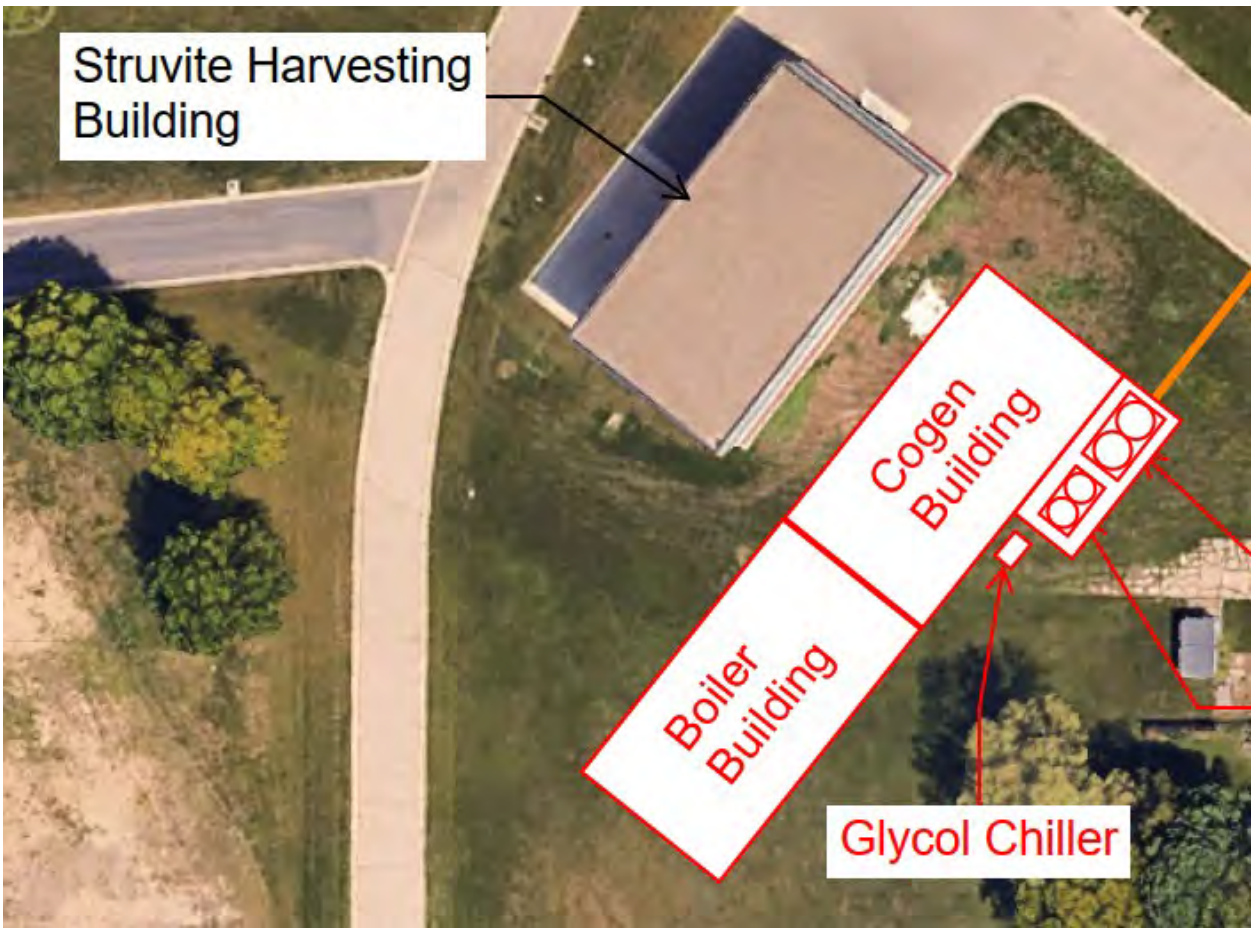

Figure 5.11 Proposed Cogeneration/Boiler Building Location

The new building will include new secondary distribution pumps and boiler primary pumps. These new distribution pumps will pump water to the entire site. Additionally, the new secondary distribution pumps would be variable speed to allow the pump to modulate to meet system demands. A schematic for the potential new flow arrangement is shown in Figure 5.12.

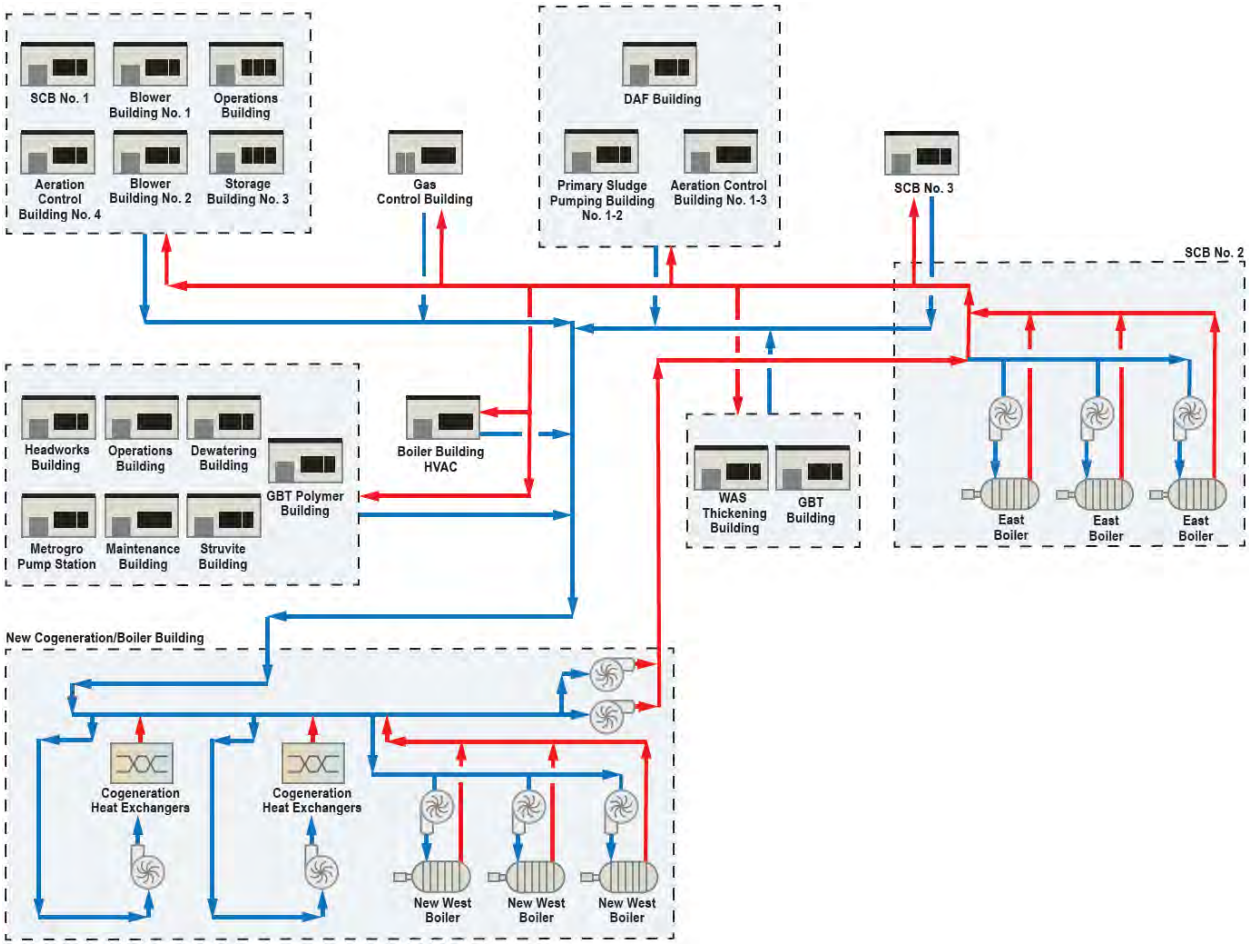

Figure 5.12 Proposed Cogeneration/Boiler Building Future Hot Water Schematic - Pathway 1 (Cogen) Centralized Alternative

This flow arrangement is considered a traditional primary/secondary hot water distribution system. To control the heat supplied to the hot water system, a new dedicated hot water pipe is proposed to be routed from the new Cogeneration/Boiler Building to SCB2. This dedicated pipe will put all the heat generation equipment in series before serving any demands. After the dedicated pipe is connected to the existing boilers in SCB2, the hot water will serve the heat demands throughout the site. Connecting all the generation equipment in series before serving any demands allows the heat equipment to work together to serve the entire site. Based on this piping arrangement, the cogeneration heat exchangers can serve as the primary heat source because they are connected to the system upstream of the other boilers. This will permit the maximum amount of heat recovered from the cogeneration engines to be utilized. The West and East Boilers will then supplement the hot water loop as needed to maintain the system supply temperature.

One of the deficiencies identified previously was low gas pressure availability at the existing West Boilers, which MMSD has observed to cause boilers to shutdown on low gas pressure. This issue is likely the result of many factors, such as limited gas blending system control and limiting gas treatment. For the centralized alternative, it is the understanding that all digester gas available would be used to serve the cogeneration engines. The new boilers are assumed to use natural gas as their primary fuel source. This

will eliminate the current issues with low gas pressure available at the boilers. However, it is recommended the new boilers be dual fuel to permit the boilers to utilize digester gas in the instance the cogeneration engines are offline or not utilizing all available digester gas.

5.6.5.4 Effluent Building

The Effluent Building is currently connected to the north hot water loop, which is not being reviewed as a part of this TM. As previously mentioned in Workshop 6 and 7 it was decided that this loop would not be considered as a part of this study. Only the Effluent Building, which would remain if the other buildings on the North Loop were removed, will be discussed. The physical location of the Effluent Building makes connecting it to the centralized hot water system cost prohibitive because of the length of buried hot water supply and return pipe that would be required.

The heating sources considered to replace the current hot water equipment for this building are natural gas and effluent heat recovery. MMSD prefers direct-fired gas equipment over adding standalone hot water boilers. New natural gas piping will need to be provided from site piping to this building. A potential alternative to gas-fired equipment is effluent heat recovery using heat pump technology. This option would involve a water-to-glycol heat exchanger between the effluent water and a closed loop water system connected to the heat pump air handling unit. The natural gas option has a lower opinion of probable capital cost (OPCC) and would require less maintenance. See Tables 5.10 and 5.11 for the OPCC's for both options, with a more detailed breakdown included in Appendix 5A.

Table 5.10 Effluent Building - Effluent Heat Recovery Project Cost

Description	Percentage	Cost
Direct Costs (includes construction allowances)		$1,024,000
General Conditions Allowance	15%	$154,000
Contractor Overhead and Profit	20%	$205,000
Bonds and Insurance	3%	$31,000
Total Construction Cost		$1,414,000
Engineering, Legal, and Administrative Fees	15%	$212,000
Construction Management	10%	$141,000
Total Project Cost Estimate (2025 dollars)		$1,767,000

Table 5.11 Effluent Building - Gas-Fired Equipment Project Cost

Description	Percentage	Cost
Direct Costs (includes construction allowances)		$238,000
General Conditions Allowance	15%	$36,000
Contractor Overhead and Profit	20%	$48,000
Bonds and Insurance	3%	$7,000
Total Construction Cost		$329,000
Engineering, Legal, and Administrative Fees	15%	$49,000
Construction Management	10%	$33,000
Total Project Cost Estimate (2025 dollars)		$411,000

5.6.5.5 Maintenance Facility (Including Future Expansions)

This building currently uses effluent heat recovery as one of its sources of heat. There is also an existing hot water service to this building that serves unit heaters and an in-floor heat system. There are no proposed hot water system or infrastructure modifications considered for the existing building.

In discussions with MMSD, the 2023 Capital Project Infrastructure Placement Plan proposed expanding the existing Maintenance Building to include a storage and maintenance shop area, as well as an adjoining Fleet Storage Building. These future building expansions were considered when developing future hot water demands. The estimated demands were developed assuming the future Maintenance Building would include 19,000 additional square feet and the future Fleet Storage Building would include 23,500 additional square feet. These square foot numbers were obtained from the Capital Project Infrastructure Placement Plan. It was assumed all future square footage will be provided with heating from the centralized hot water system. Cost for new supply and return piping from the hot water loop piping to these structures is included in the site piping section.

5.6.5.6 Operations Building

There are no infrastructure modifications required within the building.

For Pathway 1 Centralized Alterative, the absorption chiller is the largest single hot water user in the summertime, 1,800 MBH. If Pathway 1 Centralized Alternative is pursued, it is recommended that if the absorption chiller were to fail, it be replaced with another absorption chiller. This will help to limit the heat that would be wasted in the summer when there are no building heating demands.

5.6.5.7 Sludge Control Building No. 2

The existing hot water distribution piping between the current east loop and the west/central loop is not sized to permit full transfer of heat generated to flow between the east/west/central loops. As discussed in the Cogeneration/Boiler Building section, a new dedicated hot water pipe is proposed to be installed between the new Cogeneration/Boiler Building and the existing East Boilers in SCB2. In this alternative, the existing East Boilers are the last heat generating equipment to supply heat to the new hot water distribution system.

New temperature sensors will be installed in this building monitoring the supply temperature entering and leaving the building (before and after the East Boilers) to inform the central control system and determine the boiler firing rate. The east loop secondary/distribution pumps currently in the space will be removed and not replaced.

5.6.5.8 Solids Gallery

Future modifications include new ventilation and heating equipment reflected in the 2021 Facility HVAC Study. The Solids Gallery is a proposed location for installing the new larger hot water system piping connecting the new Cogeneration/Boiler Building to SCB2 as shown in Figure 5.12. To accomplish this, the existing 4-inch supply and return piping between SCB2 and the existing Boiler Building would be removed and replaced with new 12-inch supply and return piping. Additionally, a new 12-inch line from the Cogeneration/Boiler Building to SCB2 will be routed through the Solids Gallery. This arrangement would result in three 12-inch pipes in the Solids Gallery.

It is not clear the existing Solids Gallery has sufficient space to accommodate the new larger piping. If this new upsized piping is not able to fit within the existing gallery, an alternative route would include burying the piping along a parallel path to the Solids Gallery. Figure 5.13 shows a potential site pipe route used to develop the cost opinion. Final determination of which option is most constructable will be reviewed during detailed design.

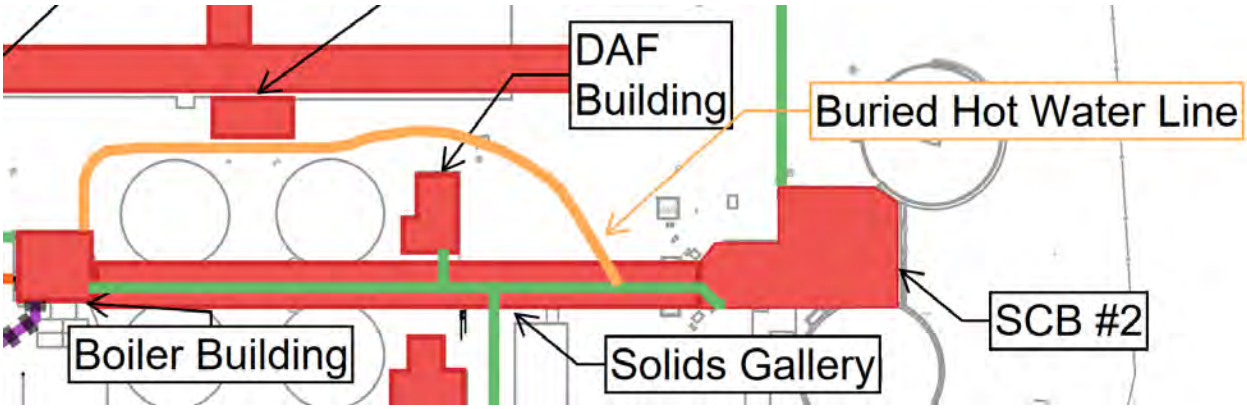

Figure 5.13 Potential Hot Water Buried Pipe Route from SCB2 to the Existing Boiler Building

5.6.5.9 Waste Activated Sludge Thickening Building (WAS Thickening Building)

There are no proposed hot water system or infrastructure modifications for this building.

Part of the 2026 Nine Springs Wastewater Treatment Plant Biosolids Facilities Plan includes reviewing the potential for the removal of the existing steam boilers in the WAS Thickening Building and converting the demands of the acid digestion system to be served by the hot water system. The process demand served by the steam boilers is approximately 6,000 MBH. The size of the three new West Boilers currently selected for the centralized alternative are 8,400 MBH each as noted in Table 5.9. If the new boilers were required to accommodate the process load currently handled by the steam boilers, the new West Boilers would need to be increased to three new boilers with an output of 10,100 MBH each.

If the hot water system were required to accommodate the process load currently handled by the steam boilers, the hot water piping to the WAS Thickening Building would also need to be replaced to handle the increased flow.

As previously mentioned, the load on the hot water system is low in the summertime. This leads to heat that could be recovered from the cogeneration engines being discharged to the atmosphere through the air-cooled radiator. Converting the demands of the acid digestion system to be served by the hot water system will use more of the cogeneration engine recovered heat and reduce natural gas use from the steam boilers. Including the demands of the acid digestion system increases the process demand by more than 60 percent. However, there would be a large capital cost to convert the acid digesters to be served by the hot water system. The cost associated with this conversion was not determined as a part of this TM.

5.6.5.10 Site Piping

The existing hot water site piping, which includes piping buried or in tunnels, for the east, west, and central hot water distribution systems were reviewed to determine if the existing piping could be used to serve the estimated future peak demands noted in Table 5.8.

The trend data in Figure 5.14 shows system flowrates below the design flowrates noted on the secondary/distribution pumps nameplate. This is likely because some of the existing pipes are currently undersized, limiting the flow through the system. The plant's hot water system has been expanded over time with new demands added to existing pipes resulting in higher pressure drop. If the existing secondary/distribution pumps were not replaced when these added loads were installed, the additional pressure drop results in flow lower than anticipated. Another consideration that might be impacting anticipated peak flowrates compared to observed flow rates is that each connected hot water load may have been sized with spare capacity in the heating coil. If each load is sized 10 percent above actual anticipated load, the cumulative peak anticipated load could be contributing to the discrepancy. Additionally, the valves on the outlet of the pumps have been throttled, further limiting flow from the pumps.

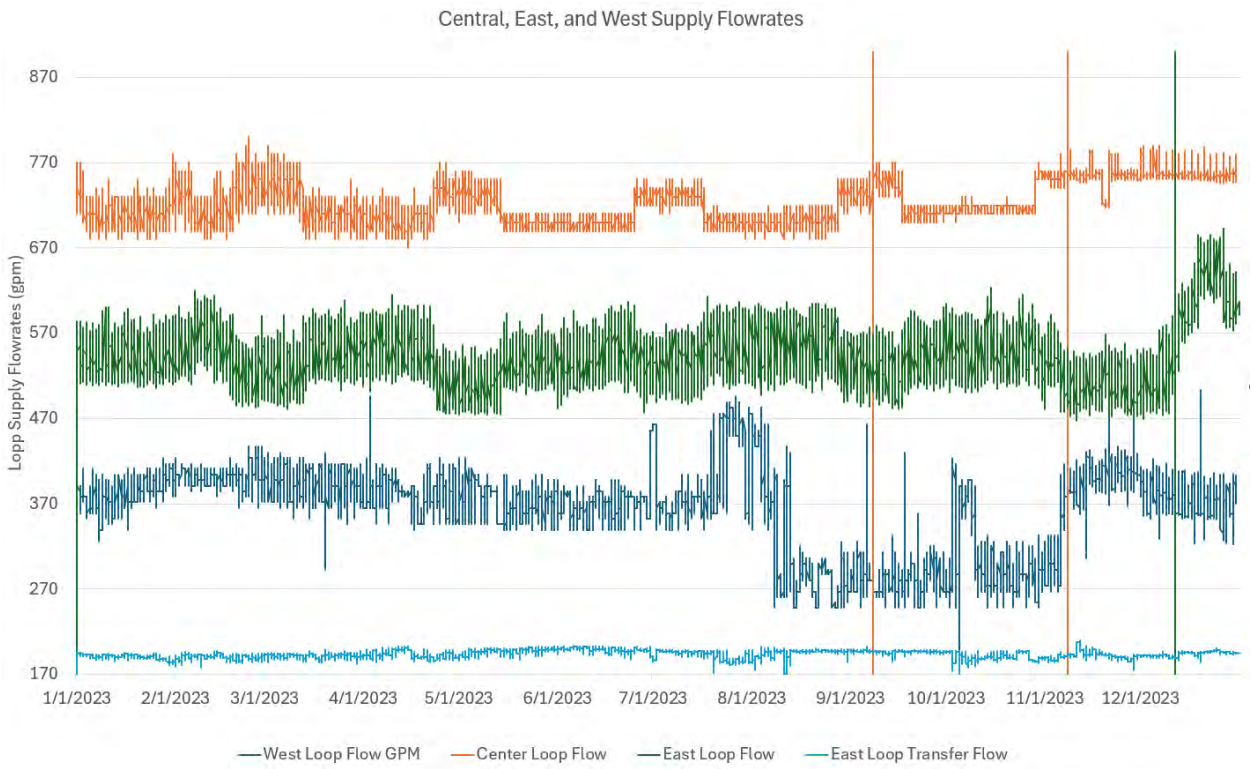

Figure 5.14 Trend Data for Central, East, and West Loop Flowrates in 2023

Table 5.12 shows a summary of the estimated future peak flowrates, which are based on the estimated future peak demands noted in Table 5.8, compared to the observed flowrates from MMSD provided trend data broken out by hot water loop as shown in Figure 5.14. The estimated future peak flowrate assumes all equipment is operating at peak demand conditions, simultaneously.

Table 5.12 Current Observed vs Future Hot Water Peak Flowrates

	Observed Peak Flowrate from Trend Data (gpm)	Estimated Future Peak Flowrate (gpm)(2)
East Loop	600	3,840(1)
Central Loop	780	1,330
West Loop	470	690

Notes:
(1) The east loop estimated peak flowrate includes flow from the Cogeneration/Boiler Building to SCB2 to serve the west and central loops. The flowrate to the east loop buildings is 1,875 gpm.
(2) The estimated future peak flowrates were calculated using a 20°F temperature difference for estimated future peak demands noted in Table 5.8.

The estimated future peak demand for each building was used for sizing the new loop piping. Supplying the future demands requires increased hot water flowrate in each of the existing hot water loops. Hydraulic calculations were performed to evaluate the velocity and pressure drop resulting from the increased demands, within the existing buried piping. A piping diagram comparing the existing and estimated future flowrates to each building can be found in Appendix 5D. The hydraulic calculations identified several existing pipes that are undersized to meet the future demands. Figure 5.15 identifies undersized piping (based on hydraulic calculations) that would need to be removed and upsized.

In addition to the removal and replacement of existing site piping, there are a number of buildings that previously did not have a heating hot water connection. As previously noted in some instances, existing buildings were served by electric heat or were not heated. These buildings will require new hot water piping. Figure 5.15 includes a potential route for the new piping to serve these buildings being added to the hot water system.

As discussed in the Cogeneration/Boiler Building section, the cogeneration engines are the primary source of heat generation on site. A new dedicated supply pipe from the Cogeneration/Boiler Building to the Solids Gallery will be required. The new pipe will be buried next to the central loop pipe back to the Solids Gallery where it will continue on to SCB2 within the Solids Gallery tunnel.

Based on feedback from MMSD, there are no buried metallic pipes that need to be replaced due to condition. However, there are existing fiberglass reinforced plastic (FRP) pipes buried on site today. As the FRP pipe has failed, it has been replaced with steel pipe due to the ease of repair. MMSD indicated that any remaining FRP piping should be removed during this site work due to the poor condition and inability to repair this piping. The cost of removal and replacement of all FRP pipe was included in the site piping OPCC.

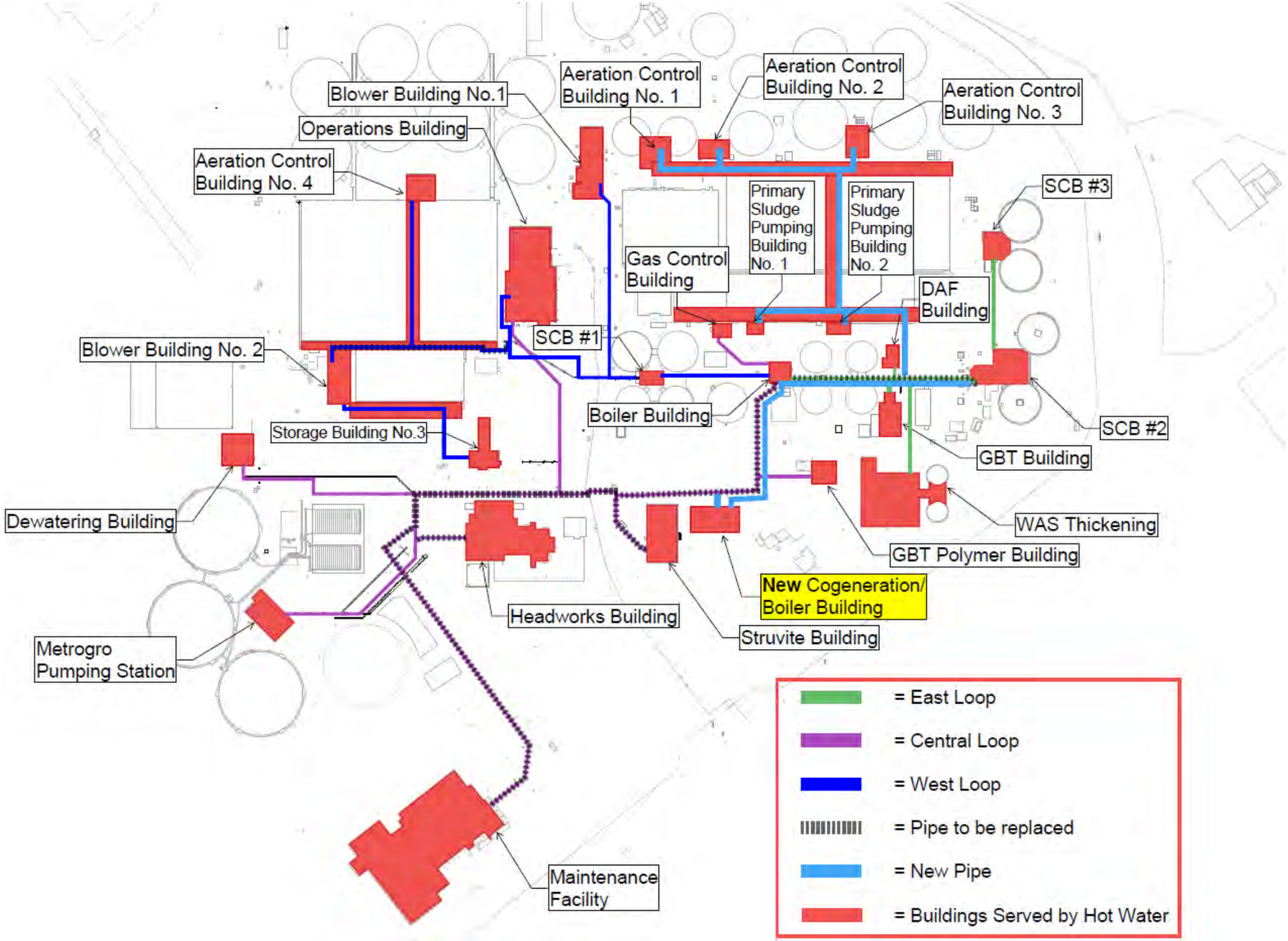

Figure 5.15 Pathway 1 (Cogen) Centralized Alternative Proposed Site Piping Modifications

5.6.6 Summary of Building Modifications

Table 5.13 shows a summary of each building in the Pathway 1 Centralized Alternative.

Table 5.13 Pathway 1 (Cogen) Centralized Alternative Building Modification Summary

Building	Proposed Ventilation Modifications	Existing Heating Equipment	Existing Hot Water Pipe to Building Undersized or New	Centralized Equipment Recommendation(1)
Aeration Control Building 1	Yes	No Heat	New Hot Water Supply	Hot Water MAU
Aeration Control Building 2	Yes	No Heat	New Hot Water Supply	Hot Water MAU
Aeration Control Building 3	Yes	Electric Unit Heater	New Hot Water Supply	Hot Water MAU
Aeration Control Building 4	No	Hot Water Unit Heaters	No	-
Blower Building 1	No	Hot Water Unit Heaters	No	-
Blower Building 2	Yes	Hot Water Unit Heaters	No	Hot Water MAU
Cogeneration/Boiler Building	No	Hot Water Unit Heaters	No	-
DAF Building	Yes	Hot Water Unit Heaters	No	Hot Water MAU
East Aeration Gallery	Yes	No Heat	New Hot Water Supply	Hot Water MAU
East Primary Gallery	Yes	No Heat	New Hot Water Supply	Hot Water MAU
Gas Control Building	Yes	Hot Water Unit Heater	No	Hot Water MAU
GBT Building	No	Hot Water AHUs	No	-
GBT Polymer Building	No	Hot Water AHU	No	-
Headworks Building	No	Hot Water AHUs and Unit Heaters	Existing Piping Undersized	-
Maintenance Facility / Maintenance Shop Expansion/Fleet Storage Expansion	No	Effluent Heat Recovery, Hot Water In-floor Heat, and Hot Water Unit Heaters	Existing Piping Undersized	-
Metrogro Pump Station	No	Hot Water AHU	No	-
Operations Building	No	Hot Water AHUs, Unit Heaters, and VAV Boxes	No	-
Primary Sludge Pumping Building No. 1	Yes	Electric Unit Heaters	New Hot Water Supply	Hot Water MAU
Primary Sludge Pumping Building No. 2	Yes	Electric Unit Heaters	New Hot Water Supply	Hot Water MAU
Sludge Control Building No. 1	No	Hot Water AHUs and Unit Heaters	No	-
Sludge Control Building No. 2	No	Hot Water AHUs and Unit Heaters	No	-

Building	Proposed Ventilation Modifications	Existing Heating Equipment	Existing Hot Water Pipe to Building Undersized or New	Centralized Equipment Recommendation(1)
Sludge Control Building No. 3	No	Hot Water AHUs and Unit Heaters	No	-
Sludge Dewatering Building	No	Hot Water AHUs and Unit Heaters	No	-
Solids Gallery	Yes	-	Existing Piping Undersized	Hot Water MAU
Storage Building 3	No	Hot Water Unit Heaters	No	-
Struvite Building	No	Hot Water AHUs and Unit Heaters	Existing Piping Undersized	-
WAS Thickening Building	No	Hot Water AHUs and Unit Heaters	No	-
West Aeration Gallery	Yes	Hot Water Unit Heater and Coil	No	Hot Water MAU
West Primary Gallery	Yes	Hot Water Unit Heater	No	Hot Water MAU

Notes:
AHU - air handling unit; MAU - make-up air unit; VAV - variable air volume.
(1) Equipment recommendation was obtained from the 2021 Facility HVAC Study.

5.6.7 Greenhouse Gas Emissions

Greenhouse gas (GHG) emissions are typically categorized as Scope 1, Scope 2, or Scope 3. Scope 1 includes direct anthropogenic (fossil fuel based) and biogenic GHG emissions related to on-site combustion and treatment processes within the system boundary. Scope 2 encompasses indirect anthropogenic emissions related to the consumption of purchased electricity, steam, heating, or cooling. All other (non-Scope 2) indirect anthropogenic GHG emissions that result from treatment operations are considered Scope 3 emissions, such as the production and the transport of chemicals. Scope 1 emissions such as direct emissions from treatment processes, fuel combustion, and fleet vehicles, are not as easily tracked or measured as Scope 2 emissions. Therefore, per MMSD's GHG assessment protocol, Scope 2 emissions are an area of focus and following its guidelines, a detailed summary of the energy use and Scope 2 emissions for the Null Pathway and Pathway 1 Centralized in 2040 are presented in Table 5.14.

Table 5.14 Design Alternatives Emissions and Energy Use Comparison Table for Pathway 1 (Cogen) Centralized

Process Description	Null Pathway (2040)					Pathway 1 Centralized (2040)				
	Operation (hr/day)	Scope 2 Emissions (MT CO_2e/yr)	Energy Used (kWh/yr)	Energy Used per MG Treated (kWh/MG)(1)	Energy Costs ($/yr)(2)	Operation (hr/day)	Scope 2 Emissions (MT CO_2e/yr)	Energy Used (kWh/yr)	Energy Used per MG Treated (kWh/MG)(1)	Energy Costs ($/yr)(2)
Biogas System	22	110	173,000	9.06	33,200	23	220	341,000	17.9	65,500

Notes:
CO_2e – carbon dioxide equivalents; hr – hour(s); MG – million gallons; mgd – million gallons per day; MT – metric tons; yr – year.
(1) Based on a projected flow of 52.3 mgd in 2040 per Influent Flow and Loading Projections TM (2023).
(2) Based on an energy cost of $0.192/kWh per escalated rate to 2040.

Scope 2 GHG emissions are expected to increase, approximately doubling, under Pathway 1 Centralized as compared to the Null Pathway due to the expected increase in electricity demand to pump hot water throughout the entire site. However, Scope 2 emissions only account for a fraction of overall emissions. Overall emissions are dominated by Scope 1 emissions, specifically emissions from natural gas combustion. Table 5.15 summarizes the major GHG emissions related to the thermal heating system for Pathway 1 Centralized, as compared to the Null Pathway.

Table 5.15 Pathway 1 (Cogen) Centralized GHG Emissions

Source(1)	Null Pathway (2040) (MT CO_2e/yr)	Pathway 1 Centralized (2040) (MT CO_2e/yr)
Emissions		
NG Combustion	3,100	3,300
Purchased Electricity	110	220
Total Emissions	3,210	3,520

Notes:
(1) GHG offsets are excluded from the evaluation because the thermal heating system alternatives do not provide any.

Under Pathway 1 Centralized, Scope 1 emissions are expected to increase modestly relative to the Null Pathway due to a minor increase in natural gas use to provide heating to additional buildings on the hot water system, leading to a similarly modest increase in overall emissions.

5.6.8 Capital Costs and Net Present Value

This section summarizes the capital costs and the NPV that were developed for Pathway 1 Centralized Alternative. The cost estimate includes capital and O&M costs to implement, operate, and maintain the heating system.

5.6.8.1 Capital Costs

The total project cost for Pathway 1 Centralized Alternative is $19,748,000. A summary of these costs is provided in Table 5.16. A detailed project cost estimate is provided in Appendix 5A. This estimated cost includes construction of a new Cogeneration/Boiler Building to house the boilers and pumps, and all infrastructure and building modifications discussed previously. The construction allowances used in developing the direct costs are noted in Table 5.3. Vendor cost proposals are provided in Appendix 5B.

Table 5.16 Pathway 1 (Cogen) Centralized Alternative Project Cost

Description	Percentage	Cost
Direct Costs (includes construction allowances)		$11,448,000
General Conditions Allowance	15%	$1,717,000
Contractor Overhead and Profit	20%	$2,290,000
Bonds and Insurance	3%	$343,000
Total Construction Cost		$15,798,000
Engineering, Legal, and Administrative Fees	15%	$2,370,000
Construction Management	10%	$1,580,000
Total Project Cost Estimate (2025 dollars)		$19,748,000

5.6.8.2 Annual Operations and Maintenance Costs

Pathway 1 Centralized alternative hot water system annual O&M costs include the following:

- Natural gas costs for the hot water system: For pathway 1 centralized alternative this includes natural gas used by the boilers.
- Natural gas costs associated with heating the acid digesters: This is broken out independently because the acid digesters do not currently utilize hot water and are not connected to the hot water system.
- Electricity costs: This is the cost associated with the pumping energy required to circulate hot water.
- Heating hot water system maintenance and operation costs: O&M for the hot water system includes MMSD operations staff (labor and maintenance) and consist of regular activities for the boilers, pumps, and HVAC equipment. These include activities such as filter replacement, coil replacement, boiler inspections, and water chemistry maintenance. This annual cost was calculated as 2 percent of HVAC equipment costs.

See Table 5.16 for the annual costs.

5.6.8.3 Net Present Value

The NPV for Pathway 1 Centralized Alternative evaluated the costs associated with the hot water system over the estimated 20-year life of the equipment from 2029 through 2048. The project cost in Table 5.17 was escalated to 2028 dollars. A summary table presenting the NPV of capital and operating costs over a 20-year life is shown in Table 5.17. Cost is expressed as NPV showing the value of the overall project in 2028 dollars. Assumptions used for the analysis are summarized in Section 5.3. The detailed NPV calculations are provided in Appendix 5C.

Table 5.17 Pathway 1 (Cogen) Centralized Alternative Net Present Value

Description	Centralized Costs
Estimated Project Cost (2028 dollars)	$21,895,000
Annual Costs	$508,000
Natural Gas Cost Hot Water System ($/yr)	$154,000
Natural Gas Cost Gas-Fired Equipment	-
Natural Gas Cost Acid Digesters ($/yr)	$272,000
Electrical Cost ($/yr)	$48,000
Heating Hot Water System O&M Cost, ($/yr)	$34,000
Net Annual Costs/(Revenues) ($/yr)	$508,000
Net Present Value	$32,070,000

5.7 Pathway 1 - Cogeneration Decentralized Alternative

5.7.1 Basis of Design

The Pathway 1 decentralized alternative includes limited hot water demands, generally serving the central portion of the site, as well as the process heating demands as indicated in Figure 5.16 and Table 5.16. The

intent of this alternative is to continue to provide hot water heating to serve buildings that are within, or very close to, the existing heating hot water loop that will still be required to provide process heat to the digestion facilities. Buildings not served by the hot water loop will be heated with natural gas-fired equipment. Like the centralized alternative, the decentralized alternative will no longer have separate east and west/central loops. All buildings served by hot water will be served by a common hot water loop.

5.7.2 Summary of Hot Water Demands

Buildings with process heating demands requiring hot water include Sludge Control Building No. 1, No. 2, and No. 3 as well as the Struvite Building. A review was done to determine which buildings, other than buildings with process heating demands, should remain served by the central hot water system. From discussions with MMSD, it was decided any buildings located between the existing Boiler Building and SCB2 will remain served by the hot water system, and additional buildings near the loop and logically connected to the loop will continue to be served with hot water heating. Additional discussion can be found in the section 5.7.6 below. Figure 5.16 and Table 5.18 show buildings proposed to remain on the hot water heating system. The remaining buildings are proposed to be served with natural gas.

Table 5.18 shows the estimated future peak heat demand for those buildings that will remain served by hot water. The demands provided in Table 5.16 reflect peak design conditions, which occur in the winter. Similar to the centralized alterative, the demands listed reflect anticipated future process demands and future ventilation modifications as established in the 2021 Facility HVAC Study. The values in Table 5.18 are the same as the centralized alternative for the similar building.

Table 5.18 Estimated Future Peak Hot Water Demand - Decentralized Alternative

Building	Loop	Building Demand (MBH)	Process Demand (MBH)	Total Demand (MBH)
Cogeneration/Boiler Building	Central	60	0	60
DAF Building	East	220	0	220
Gas Control Building	East	340	0	340
GBT Building	East	960	0	960
GBT Polymer Building	Central	220	0	220
Headworks Building	Central	3,380	0	3,380
Operations Building (Central)	Central	860	0	860
Operations Building (West)	West	2,588	0	2,588
Sludge Control Building No. 1	West	190	430	620
Sludge Control Building No. 2	East	8,200	810	9,010
Sludge Control Building No. 3	East	1,320	560	1,880
Struvite Building	Central	1,270	880	2,150
WAS Thickening Building	East	2,780	0	2,780
	Totals	22,390	2,680	25,070
	Totals if Steam Boilers Removed(1)		8,680	31,070

Notes:
(1) This value reflects the demand of the acid digesters, which are currently supplied by the steam boilers in the WAS Thickening Building and are not currently connected to the hot water system.

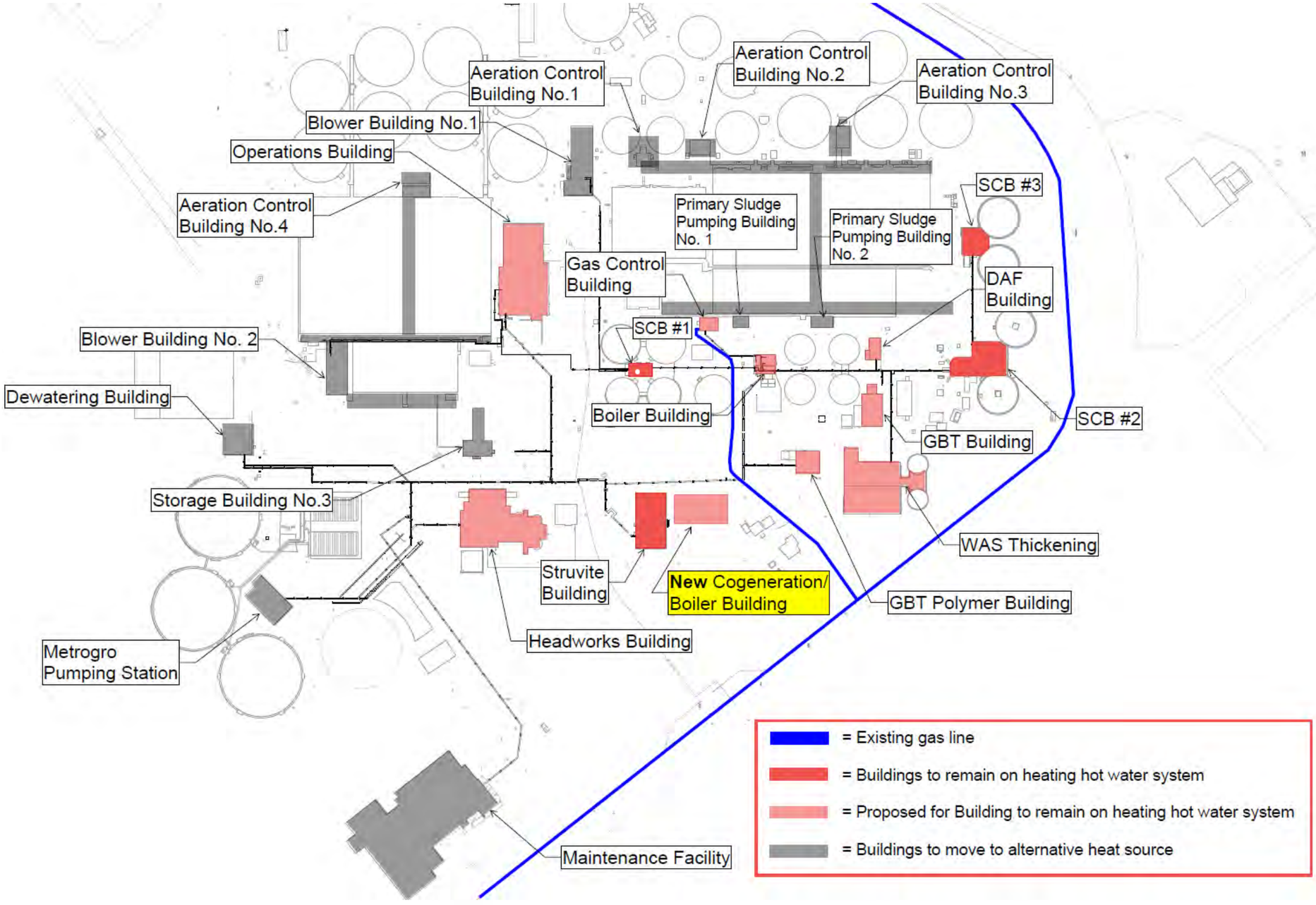

Figure 5.16 Pathway 1 (Cogen) Decentralized Alternative Building Heat Source Map

5.7.3 Summary of Hot Water Generation

Similar to the centralized alternative, the intent is to utilize the heat recovered from the cogeneration engines to the greatest extent possible. The redundancy requirements for heat generating equipment is the same as the centralized alternative and assume both cogeneration engines and one of the East Boilers in SCB2 are offline. Under this alternative, and with the stated redundancy requirements, the existing hot water boiler heating capacity is adequate to serve the entire peak demand. Therefore, it is not necessary to upsize the existing West Boilers in the Boiler Building, and the new West Boilers could fit within the existing Boiler Building. However, because a new building will be provided for the new cogeneration engines it is assumed the new West Boilers would be installed in a new boiler building attached to or incorporated with the new cogeneration building. Details of these heat generating sources are shown in Table 5.19.

Table 5.19 Estimated Future Hot Water Generation Output Capacity Pathway 1 (Cogen) - Decentralized Alternative

Location	Equipment	Heat Generation Output Capacity (MBH)	Remarks
New Cogeneration/Boiler Building	New West Boiler 1	4,180	New equipment; same capacity as existing
New Cogeneration/Boiler Building	New West Boiler 2	4,180	New equipment; same capacity as existing
New Cogeneration/Boiler Building	New West Boiler 3	4,180	New equipment; same capacity as existing
SCB2	Existing East Boiler 4	8,220	Existing equipment; no change
SCB2	Existing East Boiler 5	8,220	Existing equipment; no change
SCB2	Existing East Boiler 6	8,220	Existing equipment; no change
New Cogeneration/Boiler Building	New Cogeneration 1 Heat Exchanger	4,500	Future equipment; estimated capacity
New Cogeneration/Boiler Building	New Cogeneration 2 Heat Exchanger	4,500	Future equipment; estimated capacity
Total Heat Generation Capacity:		46,200	Includes all heat generation equipment being operational
Design Basis Heat Generation Capacity:		28,980	Assumes both generators and one of the East Boilers in SCB2 are offline

The total heat generation capacity (46,212 MBH) exceeds the total hot water demands (25,068 MBH) by 20,904 MBH. In this situation, there is about 80 percent excess heat generating capacity above the cumulative total demands. The design basis heat generation capacity (28,992 MBH) exceeds the total hot water demands (25,068 MBH) by 3,684 MBH. In this situation, there is about 15 percent excess heat generating capacity above the cumulative total demands. To transport this heating capacity throughout the site to the demands, piping and pumping modifications are required.

As discussed previously, the new cogeneration engines potential heat output is approximately 2.5 times more compared with the current engines. For this alternative, there is a smaller quantity of hot water needed to satisfy the building demands, because there are fewer buildings connected to the hot water system. For this alternative, all assumptions mentioned previously apply. But due to the lower hot water demands for this alternative, anytime the outside air temperature is above approximately 27°F, total heat the cogeneration engines can produce would exceed the hot water system demands (both building and process).

Figure 5.17 is a graphical representation of the system heat demands based on outside air temperatures compared to the heat recovered from the cogeneration engines. This graph assumes the infrastructure modifications in section 5.6.4 are made.

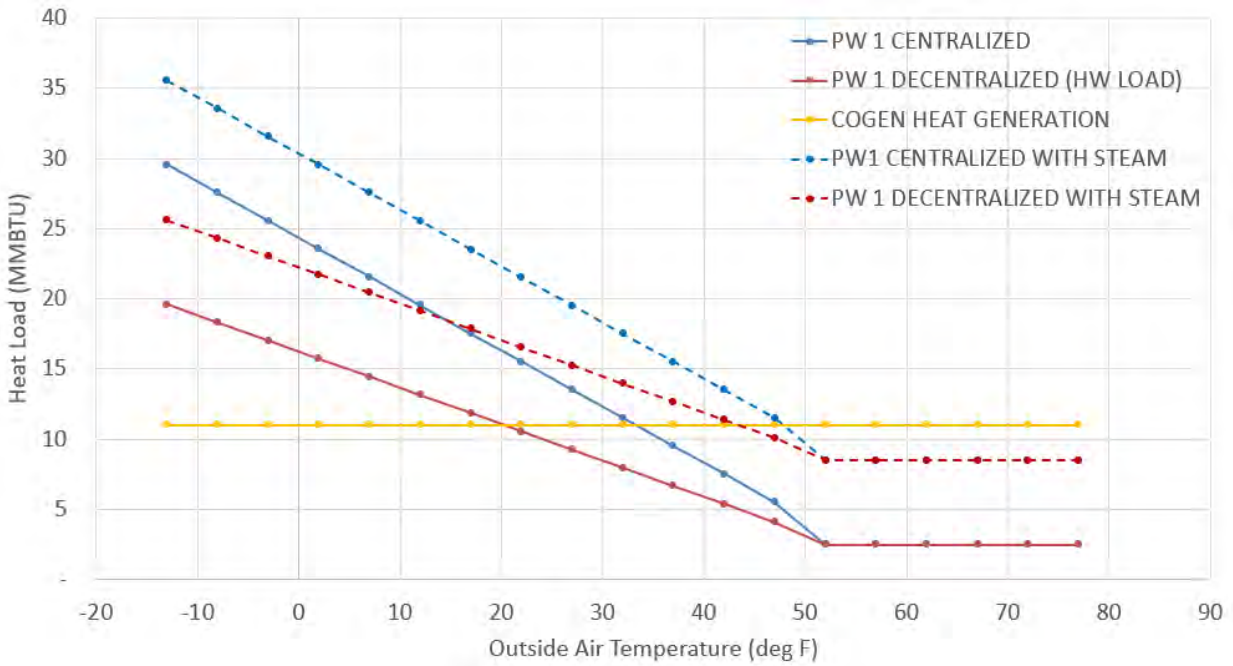

Figure 5.17 Pathway 1 (Cogen) Decentralized Heat Demands at Different Outside Air Temperatures

5.7.4 Summary of Natural Gas Demand

The remaining buildings on site not listed in Table 5.18 will be served by an alternate heat source and not connected to the hot water system. These buildings are shown as grey in Figure 5.16. The heat sources considered included natural gas and electric heat. Based on discussions with MMSD, natural gas was the preferred heat source for the decentralized alternative. Table 5.20 shows the estimated future peak natural gas demands for the buildings served by natural gas fired equipment. The values in this table are the same as the centralized alternative for the similar building.

Table 5.20 Estimated Future Peak Natural Gas Demand - Decentralized Alternative

Building	Current Loop	Building Demand (MBH)
Aeration Building 1	None	210
Aeration Building 2	None	450
Aeration Building 3	None	300
Aeration Building 4	West	40
Blower Building 1	West	240
Blower Building 2	West	655
East Aeration Gallery	East	1,365
East Primary Gallery	East	270
Fleet Storage Expansion	Central	705
Maintenance Shop Expansion	Central	570
Maintenance	Central	2,975
Metrogro Pump Station	Central	830
Primary Sludge Pumping Building 1	None	220
Primary Sludge Pumping Building 2	None	270
Sludge Dewatering	Central	1,460
Solids Gallery	East	490
Storage Building 3	West	120
West Aeration Gallery	West	1,960
West Primary Gallery	West	560
	Natural Gas Total:	13,690

5.7.5 Summary of Infrastructure Modifications

A summary of infrastructure modifications required to implement the Decentralized Alternative for Pathway 1 include:

1. New Cogeneration/Boiler Building to house the new equipment.
2. Installing new boilers, pumps, and piping. The new West Boilers will be located in the new Cogeneration/Boiler Building.
3. Installing new natural gas piping to serve the buildings not served by the hot water loop.
4. Installing new ventilation equipment (heating only) to achieve the ventilation modifications noted in the 2021 Facility HVAC Study.
5. Installing upsized site piping to accommodate the increased flow to certain buildings and through sections of pipe to serve all portions of the decentralized alternative, so one common hot water loop serves all buildings. Additional details are discussed in the Site Piping section below.
6. Installing a new dedicated hot water line from the new Cogeneration/Boiler Building to SCB2.
7. Installing improved controls to monitor hot water demands and generation with the ability to cycle and modulate all heat generating equipment. This information will inform a centralized control system to monitor and control the hot water system throughout the site.

8. Installing temperature and flow monitoring devices at each piece of equipment generating hot water that is connected to the hot water system.

5.7.6 Proposed Building Modifications

Proposed modifications for each building are found below. A summary of the building specific information is included in Table 5.20.

The following buildings are currently served by hot water and will continue to be served by the hot water system. There are no hot water system or infrastructure modifications other than monitoring and control improvements.

1. GBT Building.
2. GBT Polymer Building.
3. Operations Building.
4. Sludge Control Building No. 1.
5. Sludge Control Building No. 3.
6. Struvite Building.

The following buildings include ventilation and heating equipment modifications reflecting the 2021 HVAC Study. These buildings are currently served by hot water and will continue to be served by the hot water system:

1. DAF Building.
2. Gas Control Building.

The following buildings include ventilation and heating equipment modifications reflecting the 2021 HVAC Study. These buildings are proposed to be heated with natural gas-fired equipment:

1. Aeration Control Building No. 1.
2. Aeration Control Building No. 2.
3. Aeration Control Building No. 3.
4. East Aeration Gallery (Aeration Gallery No. 1).
5. East Primary Gallery.
6. Primary Sludge Pumping Building No. 1.
7. Primary Sludge Pumping Building No. 2.
8. West Aeration Building (Aeration Building No. 2).
9. West Primary Gallery.

The following buildings do not have ventilation modifications in the 2021 HVAC Study. These buildings are proposed to be heated with natural gas-fired equipment:

1. Aeration Control Building No. 4.
2. Maintenance Facility.
3. Metrogro Pump Station.

4. Sludge Dewatering Building.
5. Storage Building No. 3.

The following buildings include more detailed discussion:

5.7.6.1 Blower Building No. 1

Future modifications include the removal of the existing engine-driven blower, heat exchanger, associated pumps, heating hot water piping and supports, and unit heaters. Modifications include the installation of new gas-fired unit heaters. New natural gas supply piping will need to be routed to serve this building. The HVAC upgrades for this building are included in the Liquid Processing Phase 2 project. Any future modifications for this building will be coordinated with the Liquid Processing Phase 2 project.

5.7.6.2 Blower Building No. 2

Future modifications include new ventilation and heating equipment reflected in the 2021 Facility HVAC Study. For the decentralized alternative, this building would be converted from hot water to gas-fired equipment due to the location of this building in relation to the hot water piping that will be in place. Existing hot water unit heaters and associated piping will be removed. New natural gas supply piping will need to be routed to serve this building. Similar to Blower Building No. 1, any future modifications for this building will be coordinated with the Liquid Processing Phase 2 project.

5.7.6.3 New Cogeneration/Boiler Building

The proposed new West Boilers will have the same output as the existing West Boilers. Due to changes in efficiency standards, the footprint of the proposed new West Boilers for the decentralized alternative are larger than the existing boilers. A comparison of the new and existing boilers can be seen in Figure 5.18.

For the new boilers, scotch marine (fire-tube) boilers from two different manufacturers (Cleaver Brooks and Hurst) were used as the basis of the proposed layout. Water-tube boilers were considered because they commonly have a smaller equipment footprint compared with firetube boilers, however, water tube boilers are generally considered less robust than a scotch marine style boiler and tend to have shorter equipment life when fired on digester gas.

The equipment footprint size shown in Figure 5.18 is based around Cleaver Brooks boilers because this maintains the same manufacturer as the plant has currently. A cutsheet of the boiler selection used for this layout is included in Appendix 5B.

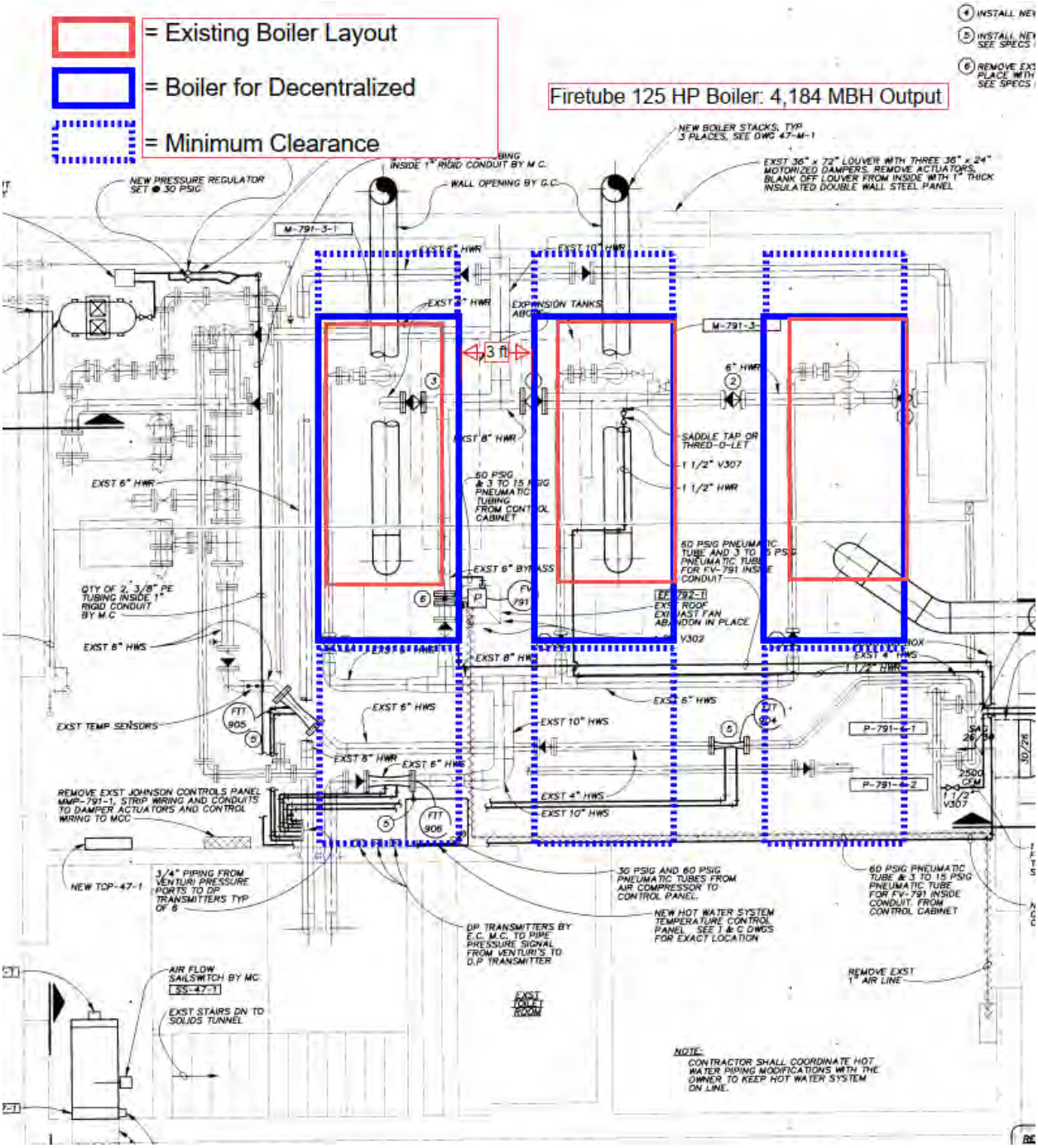

Figure 5.18 Comparison of New and Existing Boiler Footprint Within the Existing Boiler Building

The existing Boiler Building could accommodate the proposed new West Boilers with minimal modifications. However, as a part of Pathway 1, the new cogeneration engines are planned to be installed in a new building. Similar to the centralized alternative, it is proposed the new West Boilers be installed in a new boiler building to be included as part of a new cogeneration building. This will consolidate the heat generation equipment, improving control of the system. This option was coordinated with TM 4. All existing hot water equipment in the existing Boiler Building will be removed. The Capital Project

Infrastructure Placement Plan included a proposed location for a new Heat and Power building. See Figure 5.19 for the proposed location for the new Cogeneration/Boiler Building.

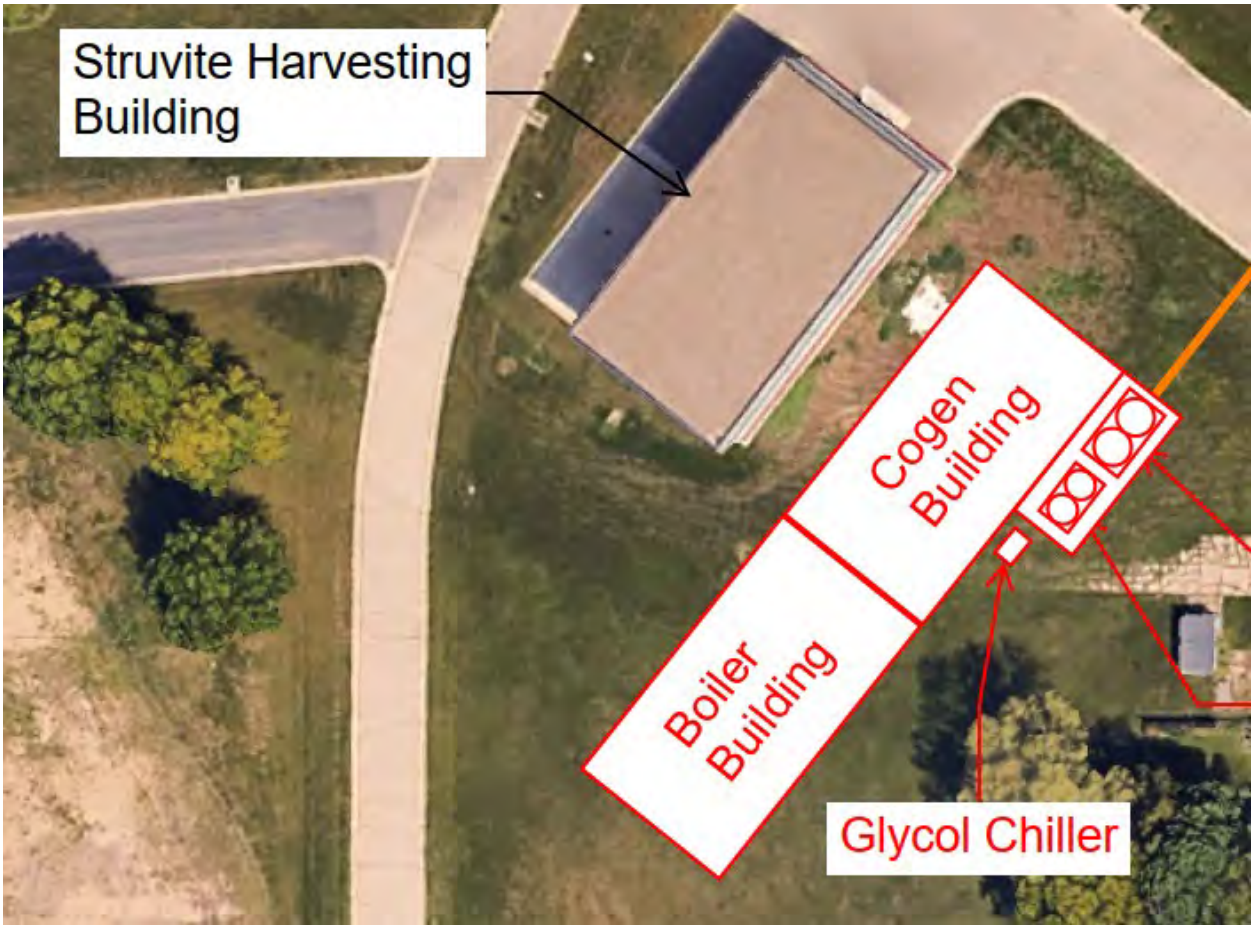

Figure 5.19 Proposed Cogeneration/Boiler Building Location

Similar to the centralized alternative, the new building would include new secondary distribution pumps and boiler primary pumps. Similar to Pathway 1 Centralized, the new secondary distribution pumps would be variable speed to allow the pump to modulate to meet system demands. A schematic for the potential new flow arrangement is shown in Figure 5.20.

This flow arrangement for the decentralized alternative is the same as described in the centralized alternative, section 5.6.5.3, but the flowrates will be different due to the smaller hot water system.

Also similar to the centralized alternative, the new boilers are assumed to use natural gas as their primary fuel source. However, it is recommended that the new boilers be dual fuel to permit the boilers to utilize digester gas in the instance the cogeneration engines are offline or not utilizing all available digester gas.

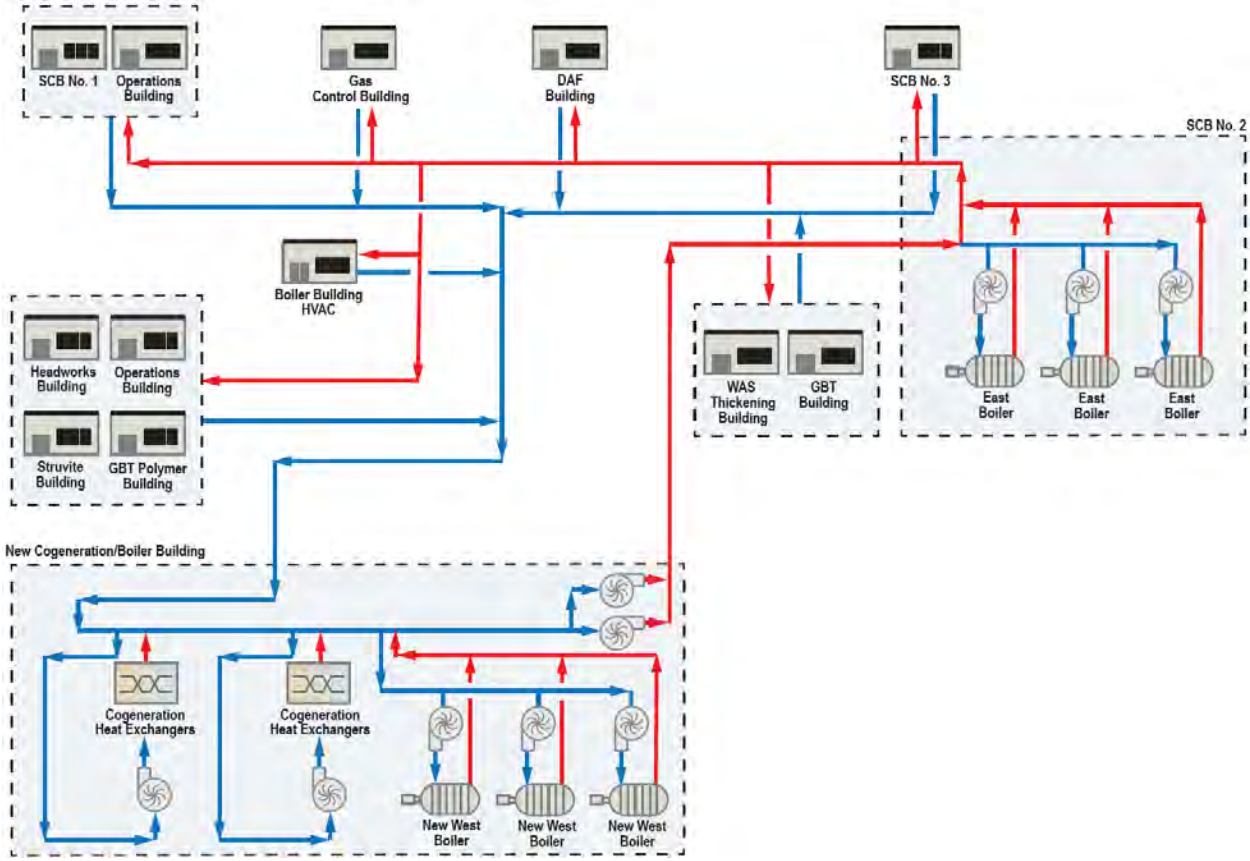

Figure 5.20 Proposed Future Hot Water Schematic - Pathway 1 (Cogen) Decentralized Alternative

5.7.6.4 Effluent Building

The Effluent Building approach for the decentralized alternative is the same as described in the centralized alternative.

5.7.6.5 Headworks Building

This building is one of the largest hot water demands for the NSWTP. Additionally, much of this building is electrically classified as Class I Division 1, and therefore gas-fired equipment is not preferable. For these reasons and based on discussions with MMSD, it was determined this building will remain on the existing hot water loop. There are no infrastructure modifications required within the building however, there are modifications proposed for the site piping that are discussed within that section.

5.7.6.6 Maintenance Facility (Including Future Expansions)

The future expansion considerations detailed in the centralized alternative are also applicable to the decentralized alternative. It was assumed all future square footage would be provided with natural gas heating. For the decentralized alternative, it was assumed the existing effluent heat pumps serving the space will remain. Cost for new natural gas piping is included in the site piping section.

5.7.6.7 Operations Building

There are no proposed ventilation modifications for this building. Similar to the Headworks Building, this building is one of the larger hot water demands for the NSWTP. Converting all existing hot water using equipment within this building to an alternative heat source would be a substantial change. Based on discussions with MMSD, it was determined this building will remain on the hot water loop for this alternative.

For Pathway 1 Decentralized Alterative, the absorption chiller is the largest single hot water user in the summertime, 1,800 MBH. If Pathway 1 Decentralized Alternative is pursued, it is recommended that if the absorption chiller were to fail, it be replaced with another absorption chiller. This will help to limit the heat that would be wasted in the summer when there are no building heating demands.

5.7.6.8 Sludge Control Building No. 2

Modifications within this building are essentially the same as the modifications required for the centralized heating alternative, with the exception that less hot water flow is required to serve the lower hot water system demands under the decentralized heating alternative.

5.7.6.9 Solids Gallery

Future modifications include new ventilation and heating equipment reflected in the 2021 Facility HVAC Study. Modifications within this building are the same as the modifications required for the centralized heating alternative, with the exception that less hot water flow is required to serve the lower hot water system demands under the decentralized heating alternative. For the decentralized alternative, the proposed piping modification involves removing the existing 4-inch supply and return piping between SCB2 and the existing Boiler Building and replacing it with new 10-inch supply and return piping. Additionally, a new 10-inch line from the Cogeneration/Boiler Building to SCB2 will be routed through the Solids Gallery. This arrangement would result in three 10-inch pipes in the Solids Gallery.

With a slightly reduced pipe size, it is also not clear the existing Solids Gallery has sufficient space to accommodate the new larger piping. Like the centralized alternative, if this new upsized piping is not able to fit within the existing gallery, an alternative route would include burying the piping along a parallel path to the Solids Gallery. Figure 5.13 shows a potential site pipe route if the pipes will not fit in the Solids Gallery. Final determination of which option is most constructable will be reviewed during detailed design.

5.7.6.10 Waste Activated Sludge Thickening Building

There are no proposed hot water system or infrastructure modifications for this building. This building is currently served by the existing hot water system and will remain served by this system for the decentralized alternative.

Similar to the discussion on the centralized alternative, part of the 2026 Nine Springs Wastewater Treatment Plant Biosolids Facilities Plan includes reviewing the potential for the removal of the existing steam boilers in the WAS Thickening Building and converting the demands of the acid digestion system to be served by the hot water system. The process demand served by the steam boilers is approximately 6,000 MBH. The size of the three new West Boilers currently selected for the decentralized alternative are 4,184 MBH boilers each. If the new boilers were required to accommodate the process load currently

handled by the steam boilers, the new West Boilers would need to be increased to three new boilers with an output of 6,695 MBH each. The hot water pipe to this building would also need to be replaced to handle the increased flow.

Similar to the centralized alternative, adding the steam boiler heating load to the hot water system will allow for more heat to be recovered from the cogeneration engines. With a lower hot water loop load in the decentralized alternative, more heat can be recovered compared to the centralized alternative. The potential replacement of the steam boilers will be reviewed as part of the 2026 Nine Springs Wastewater Treatment Plant Biosolids Facilities Plan.

5.7.6.11 Site Piping

Similar to the centralized alternative, the existing hot water site piping, which includes piping buried or in tunnels, for the East, West, and Central distribution systems were reviewed to determine if the existing piping could be used to serve the demands noted in Table 5.18.

Table 5.21 shows a summary of the estimated future peak flowrates, which are based on the estimated future peak demands noted in Table 5.18, compared to the observed flowrates from MMSD provided trend data broken out by hot water loop as shown in Figure 5.14. The estimated future peak flowrate assumes all equipment is operating at peak demand conditions, simultaneously.

Table 5.21 Current Observed Versus Future Hot Water Peak Flowrates

	Observed Peak Flowrate from Trend Data (gpm)	Estimated Future Peak Flowrate (gpm)
East Loop	600	2,530(1)
Central Loop	780	670
West Loop	470	350

Notes:
(1) The East loop peak flowrate includes flow from SCB2 to the Boiler Building to serve the West and Central loops. The flowrate to the East Loop buildings is 1,520 gpm.

The estimated future peak demand for each building was used to confirm flow velocity in existing piping. Hydraulic calculations were performed to evaluate the velocity and pressure drop resulting from the changes in demands, assuming the existing buried piping remained in service. A piping diagram comparing the existing and estimated future flowrates to each building can be found in Appendix 5D. The central loop flow in the future decreases from the current operation, but the current existing piping is undersized and portions of the existing piping should be replaced.

Figure 5.21 identifies existing natural gas piping, proposed natural gas piping, and undersized hot water piping (based on hydraulic calculations) that would need to be removed and upsized.

Like the Centralized Alterative, a new dedicated hot water supply pipe from the Cogeneration/Boiler Building to the Solids Gallery will be required, as shown in Figure 5.21. The new pipe will be buried next to the central loop pipe back to the Solids Gallery where it will continue on to SCB2 within the Solids Gallery tunnel.

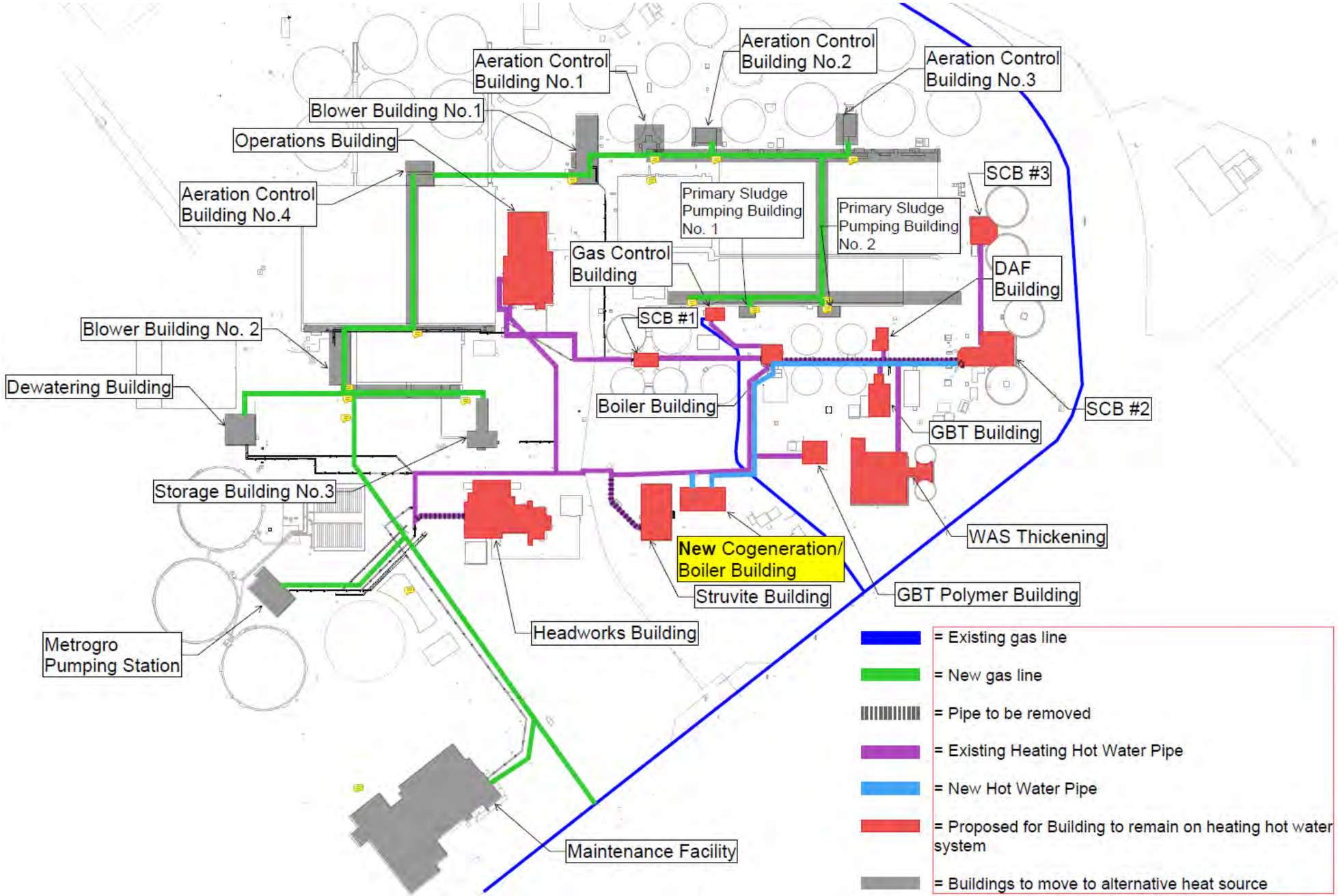

Figure 5.21 Pathway 1 (Cogen) Decentralized Alternative Proposed Site Piping Modifications

Similar to the discussion in the centralized alternative, the cost of removal and replacement of all FRP pipe was included in the site piping OPCC.

For the Decentralized Alternative, several buildings would be converted from hot water heating to be served with natural gas heat. A new natural gas pipe will be routed from the utility main into the site to serve these buildings. The green piping in Figure 5.21 is a proposed general route of the new natural gas pipe. The final natural gas pipe route and size will be determined during detailed design.

5.7.7 Summary of Building Modifications

Table 5.22 shows a summary of each building in the Pathway 1 Decentralized Alternative.

Table 5.22 Pathway 1 (Cogen) Decentralized Alternative Building Modification Summary

Building	Proposed Ventilation Modifications	Existing Heating Equipment	Existing Hot Water Pipe to Building Undersized or Natural Gas Required	Decentralized Equipment Recommendation(1)
Aeration Control Building 1	Yes	No Heat	New Natural Gas Supply	Gas-fired MAU
Aeration Control Building 2	Yes	No Heat	New Natural Gas Supply	Gas-fired MAU
Aeration Control Building 3	Yes	Electric Unit Heater	New Natural Gas Supply	Gas-fired MAU
Aeration Control Building 4	No	Hot Water Unit Heaters	New Natural Gas Supply	Gas-fired Unit Heaters
Blower Building 1	No	Hot Water Unit Heaters	New Natural Gas Supply	Gas-fired Unit Heaters
Blower Building 2	Yes	Hot Water Unit Heaters	New Natural Gas Supply	Gas-fired MAU
Cogeneration/Boiler Building	No	Hot Water Unit Heaters	No	-
DAF Building	Yes	Hot Water Unit Heaters	No	Hot Water MAU
East Aeration Gallery	Yes	No Heat	New Natural Gas Supply	Gas-fired MAU
East Primary Gallery	Yes	No Heat	New Natural Gas Supply	Gas-fired MAU
Gas Control Building	Yes	Hot Water Unit Heater	No	Hot Water MAU
GBT Building	No	Hot Water AHUs	No	-
GBT Polymer Building	No	Hot Water AHU	No	-
Headworks Building	No	Hot Water AHUs and Unit Heaters	Existing Piping Undersized	-
Maintenance Facility/Maintenance Shop Expansion/Fleet Storage Expansion	No	Effluent Heat Recovery, Hot water In-floor Heat, and Hot Water Unit Heaters	New Natural Gas Supply	Gas-fired Unit Heaters
Metrogro Pump Station	No	Hot Water and AHU	New Natural Gas Supply	Gas-fired MAU
Operations Building	No	Hot Water AHUs, Unit Heaters, and VAV Boxes	No	-

Building	Proposed Ventilation Modifications	Existing Heating Equipment	Existing Hot Water Pipe to Building Undersized or Natural Gas Required	Decentralized Equipment Recommendation(1)
Primary Sludge Pumping Building No. 1	Yes	Electric Unit Heaters	New Natural Gas Supply	Gas-fired MAU
Primary Sludge Pumping Building No. 2	Yes	Electric Unit Heaters	New Natural Gas Supply	Gas-fired MAU
Sludge Control Building No. 1	No	Hot Water AHUs and Unit Heaters	No	-
Sludge Control Building No. 2	No	Hot Water AHUs and Unit Heaters	No	-
Sludge Control Building No. 3	No	Hot Water AHUs and Unit Heaters	No	-
Sludge Dewatering	No	Hot Water AHUs and Unit Heaters	New Natural Gas Supply	Gas-fired MAU
Solids Gallery	Yes	-	New Natural Gas Supply	Gas-fired MAU
Storage Building 3	No	Hot Water Unit Heaters	New Natural Gas Supply	Gas-fired Unit Heaters
Struvite Building	No	Hot Water AHUs and Unit Heaters	Existing Piping Undersized	-
WAS Thickening Building	No	Hot Water AHUs and Unit Heaters	No	-
West Aeration Gallery	Yes	Hot Water Unit Heater and Coil	New Natural Gas Supply	Gas-fired MAU
West Primary Gallery	Yes	Hot Water Unit Heater	New Natural Gas Supply	Gas-fired MAU

Notes:
(1) Equipment recommendation was obtained from the 2021 Facility HVAC Study.

5.7.8 Greenhouse Gas Emissions

Per MMSD's GHG assessment protocol, a detailed summary of the energy use and Scope 2 emissions for the Null Pathway and Pathway 1 Decentralized in 2040 are presented in Table 5.23.

Table 5.23 Design Alternatives Emissions and Energy Use Comparison Table for Pathway 1 (Cogen) Decentralized

Process Description	Null Pathway (2040)					Pathway 1 Decentralized (2040)				
	Operation (hr/day)	Scope 2 Emissions (MT CO_2e/yr)	Energy Used (kWh/yr)	Energy Used per MG Treated (kWh/MG)(1)	Energy Costs ($/yr)(2)	Operation (hr/day)	Scope 2 Emissions (MT CO_2e/yr)	Energy Used (kWh/yr)	Energy Used per MG Treated (kWh/MG)(1)	Energy Costs ($/yr)(2)
Biogas System	22	110	173,000	9.06	33,200	23	100	158,000	8.28	30,300

Notes:
(1) Based on a projected flow of 52.3 mgd in 2040 per Influent Flow and Loading Projections TM (2023).
(2) Based on an energy cost of $0.192/kWh per escalated rate to 2040.

Scope 2 GHG emissions are expected to remain approximately the same under Pathway 1 Decentralized as compared to the Null Pathway. However, Scope 2 emissions only account for a fraction of overall emissions. Overall emissions are dominated by Scope 1 emissions, specifically emissions from natural gas

combustion. Table 5.24 summarizes the major GHG emissions related to the thermal heating system for Pathway 1 Decentralized, as compared to the Null Pathway.

Table 5.24 Pathway 1 (Cogen) Decentralized GHG Emissions

Source(1)	Null Pathway (2040) (MT CO_2e/yr)	Pathway 1 Decentralized (2040) (MT CO_2e/yr)
Emissions		
NG Combustion	3,100	3,500
Purchased Electricity	110	100
Total Emissions	3,210	3,600

Notes:
(1) GHG offsets are excluded from the evaluation because the thermal heating system alternatives do not provide any.

Under Pathway 1 Decentralized, Scope 1 emissions are expected to increase modestly relative to the Null Pathway due to a minor increase in natural gas use for decentralized heating of buildings not served by the main hot water loop, leading to a similarly modest increase in overall emissions.

5.7.9 Capital Costs and Net Present Value

This section summarizes the capital costs and the NPV that were developed for Pathway 1 Decentralized Alternative. The cost estimate includes capital and life-cycle costs to implement, operate, and maintain the heating system.

5.7.9.1 Capital Costs

The total project cost estimate for Pathway 1 Decentralized Alternative is $15,223,000. A summary of these costs is provided in Table 5.25. A detailed project cost estimate is provided in Appendix 5A. This estimated cost includes construction of a new Cogeneration/Boiler Building to house the new boilers and pumps, and all infrastructure and building modifications discussed previously. The construction allowances used in developing the direct costs are noted in Table 5.3.

Table 5.25 Pathway 1 (Cogen) Decentralized Alterative Project Cost

Description	Percentage	Cost
Direct Costs (includes construction allowances)		$8,824,000
General Conditions Allowance	15%	$1,324,000
Contractor Overhead and Profit	20%	$1,765,000
Bonds and Insurance	3%	$265,000
Total Construction Cost		$12,178,000
Engineering, Legal, and Administrative Fees	15%	$1,827,000
Construction Management	10%	$1,218,000
Total Project Cost Estimate (2025 dollars)		$15,223,000

5.7.9.2 Annual Operations and Maintenance Costs

Pathway 1 Decentralized Alternative hot water system annual operation and maintenance costs include the following:

- Natural gas costs for the hot water system: This includes both natural gas used by the boilers and natural gas used by gas-fired heating equipment for building heating (such as make up air units and gas unit heaters).
- Natural gas costs associated with heating the acid digesters: This is broken out independently because, as noted previously, this acid digester do not currently utilize hot water and are not connected to the hot water system.
- Electricity costs: This is the cost associated with the pumping energy required to circulate hot water.
- Heating hot water system maintenance and operation costs: Operation and maintenance for the hot water system includes MMSD operations staff (labor and maintenance) and consist of regular activities for the boilers, pumps, and HVAC equipment. These include activities such as filter replacement, coil replacement, boiler inspections, and water chemistry maintenance. This annual cost was calculated as 2 percent of HVAC equipment costs.

See Table 5.24 for the annual costs.

5.7.9.3 Net Present Value

The NPV for Pathway 1 Decentralized Alternative evaluated the costs associated with the hot water system over the estimated 20-year life of the equipment from 2029 through 2048. The project cost in Table 5.26 was escalated to 2028 dollars. A summary table presenting the NPV of capital and operating costs over a 20-year life is shown in Table 5.26. Cost is expressed as NPV showing the value of the overall project in 2028 dollars. Assumptions used for the analysis are summarized in Section 5.3. The detailed NPV calculations are provided in Appendix 5C.

Table 5.26 Pathway 1 (Cogen) Decentralized Alternative Net Present Value

Description	Decentralized Costs
Estimated Project Cost (2028 dollars)	$16,878,000
Annual Costs	$509,000
Natural Gas Cost Hot Water System ($/yr)	$41,000
Natural Gas Cost Gas-Fired Equipment	$140,000
Natural Gas Cost Acid Digesters ($/yr)	$272,000
Electrical Cost ($/yr)	$22,000
Heating Hot Water System O&M Cost, ($/yr)	$34,000
Net Annual Costs/(Revenues), $/year	$509,000
Net Present Value	$27,078,000

5.8 Pathway 2 - Renewable Natural Gas Evaluation

5.8.1 Overview of Pathway 2 Alternatives

Pathway 2 (RNG) assumes all the digester gas produced on site is processed and supplied to the natural gas utility. Pathway 2 impacts the site heating hot water system by removing the existing engine generators. Pathway 2 includes centralized and decentralized alternatives and similar to Pathway 1 the centralized alternative utilizes hot water as the heat source for all buildings and with the decentralized alternative, there is limited hot water use.

5.9 Pathway 2 - Renewable Natural Gas Centralized Alternative

5.9.1 Basis of Design

The Pathway 2 Centralized Alternative assumes hot water will be the heat source for all process heating demands currently served by hot water and HVAC heating demands. Pathway 2 Centralized Alternative has the same buildings included as Pathway 1 Centralized Alternative. Also, similar to Pathway 1 Centralized Alternative, there will no longer be separate east and west/central loops, but rather the existing loops will be combined into one common plant loop serving all buildings. See Figure 5.22 for the proposed hot water schematic.

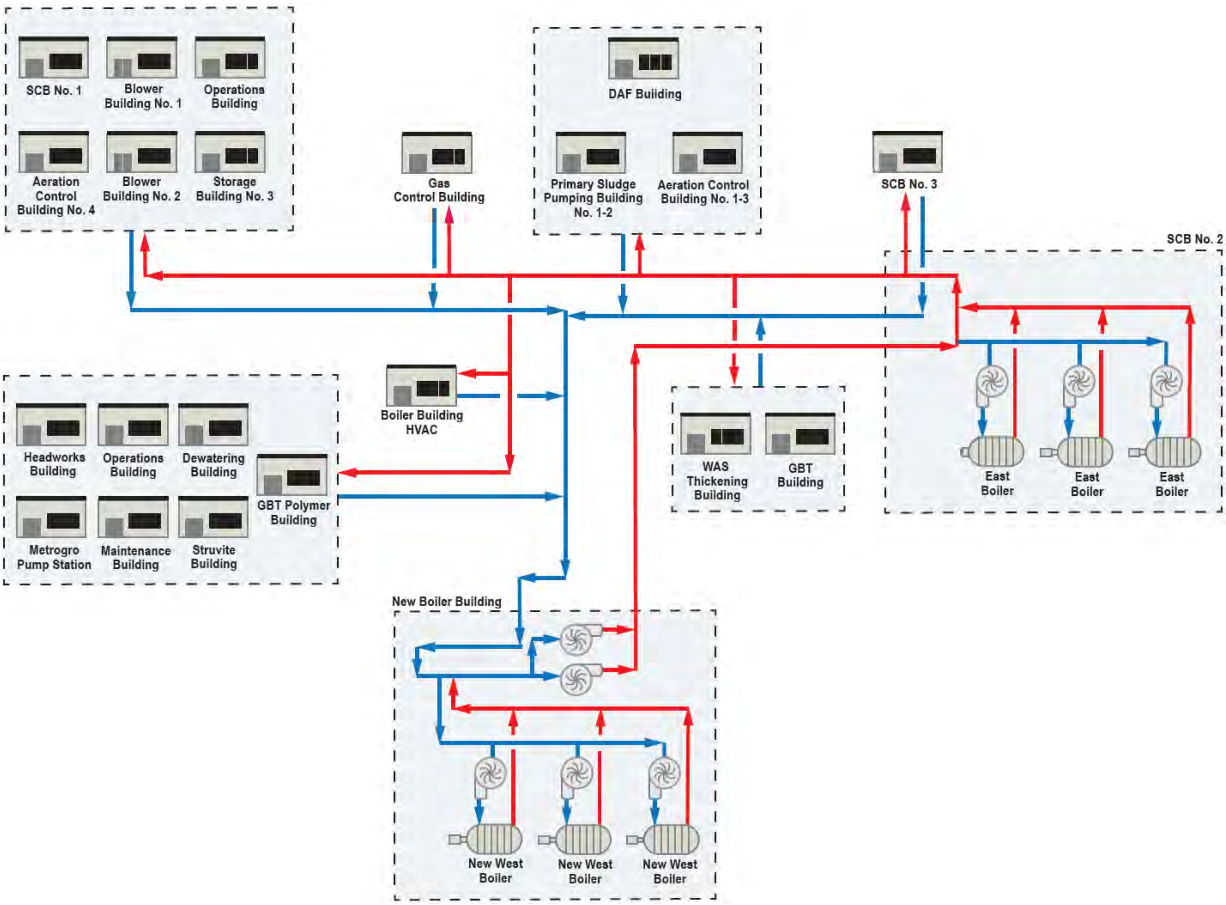

Figure 5.22 Proposed Future Hot Water Schematic - Pathway 2 (RNG) Centralized Alternative

- Hot Water Demands:
  - See Table 5.27 for the hot water demands for the Pathway 2 Centralized Alternative.

Table 5.27 Estimated Future Peak Heat Demand - Pathway 2 (RNG) Centralized Alternative

Building	Future Loop	Building Demand (MBH)	Process Demand(3) (MBH)	Total Demand (MBH)
Aeration Building 1(1)	**East**	**210**	**0**	**210**
Aeration Building 2(1)	**East**	**450**	**0**	**450**
Aeration Building 3(1)	**East**	**300**	**0**	**300**
Aeration Building 4	West	40	0	40
Blower Building 1	West	240	0	240
Blower Building 2	West	655	0	655
Cogeneration/Boiler Building(1)	**Central**	**60**	**0**	**60**
DAF Building	East	220	0	220
East Aeration Gallery(1)	**East**	**1,365**	**0**	**1,365**
East Primary Gallery(1)	**East**	**270**	**0**	**270**
Fleet Storage Expansion(1)	**Central**	**705**	**0**	**705**
Gas Control Building	East	340	0	340
GBT Building	East	960	0	960
GBT Polymer Building	Central	220	0	220
Headworks Building	Central	3,380	0	3,380
Maintenance Shop Expansion(1)	**Central**	**570**	**0**	**570**
Maintenance	Central	2,975	0	2,975
Metrogro Pump Station	Central	830	0	830
Operations Building (Central)	Central	860	0	860
Operations Building (West)	West	2,588	0	2,588
Primary Sludge Pumping Building 1(1)	**East**	**220**	**0**	**220**
Primary Sludge Pumping Building 2(1)	**East**	**270**	**0**	**270**
Sludge Control Bldg No. 1	West	190	430	620
Sludge Control Bldg No. 2	East	8,200	810	9,010
Sludge Control Bldg No. 3	East	1,320	560	1,880
Sludge Dewatering	Central	1,460	0	1,460
Solids Gallery	East	490	0	490
Storage Building 3	West	120	0	120
Struvite Building	Central	1,270	880	2,150
WAS Thickening Building	East	2,780	0	2,780
West Aeration Gallery	West	1,960	0	1,960
West Primary Gallery	West	560	0	560
West and Central Loop Total:		18,680	1,310	19,990
East Loop Total:		17,400	1,370	18,770
Cumulative Total:		36,080	2,680	38,760
Totals if Steam Boiler Supplied Loads are Served by Hot Water(2)		36,080	8,680	44,760

Notes:
(1) Bold data are new buildings added compared to Table 5.2.
(2) This value reflects the demand of the acid digesters, which are currently supplied by the steam boilers in the WAS Thickening Building and are not currently connected to the hot water system.
(3) The process loads are the same as the existing process loads in Table 5.2. This is because the values presented are peak loads. While the total amount of hot water required will increase over time, the peak quantity of heat lost in the digestion tanks should remain constant.

- Hot Water Generation:
  - Hot water generation for Pathway 2 Centralized Alternative is provided only by boilers. This pathway does not recover any heat because there are no cogeneration engines burning digester gas. As noted previously, the peak heating demands need to be met assuming one boiler in SCB2 is out of service. Using this basis, the required capacity of each of the new West Boilers is the same as in Pathway 1 Centralized Alternative (8,400 MBH output capacity) as noted in Table 5.28.

Table 5.28 Estimated Future Hot Water Generation Output Capacity Pathway 2 (RNG) Centralized Alternative

Location	Equipment	Heat Generation Output Capacity (MBH)	Remarks
New Cogeneration/Boiler Building	New West Boiler 1	8,400	New upsized boiler to account for base assumption of both generators and one of the East Boilers being offline
New Cogeneration/Boiler Building	New West Boiler 2	8,400	New upsized boiler to account for base assumption of both generators and one of the East Boilers being offline
New Cogeneration/Boiler Building	New West Boiler 3	8,400	New upsized boiler to account for base assumption of both generators and one of the East Boilers being offline
SCB2	Existing East Boiler 4	8,220	Existing equipment; no change
SCB2	Existing East Boiler 5	8,220	Existing equipment; no change
SCB2	Existing East Boiler 6	8,220	Existing equipment; no change
Total Heat Generation Capacity		49,860	Includes all heat generation equipment being operational
Design Basis Heat Generation Capacity		41,640	Assumes both generators and one of the East Boilers is offline

For Pathway 2 Centralized Alternative, the total heat generation capacity (49,860 MBH) exceeds the total hot water demand (38,758 MBH) by 11,102 MBH. In this situation, there is about 22 percent excess heat generating capacity above the cumulative total demands. The design basis heat generation capacity with one boiler offline is the same as Pathway 1 Centralized Alternative and includes 7 percent excess heat generating capacity above the cumulative total demands. Similar to Pathway 1 Centralized Alternative, transporting this heating capacity throughout the site requires piping and pumping modifications.

Because the new West Boilers for Pathway 2 Centralized Alternative are the same size as Pathway 1 Centralized Alternative, they are too large to fit in the existing Boiler Building. A new building is required to house these boilers. It is proposed the new west boilers be installed in a new building in a similar location to the proposed Cogeneration/Boiler Building in Pathway 1, but will be smaller because the building would only house boilers.

The absorption chiller is not recommended to remain for Pathway 2. If the absorption chiller were to fail, it is not recommended to be replaced with another absorption chiller. The new hot water system will include improved control to reduce excess heat within the hot water system that the absorption chiller previously used. A water-cooled chiller is proposed to replace the absorption chiller in the future when it fails.

Other than the Operations Building, the recommendations for each building discussed in Pathway 1 Centralized Alternative are the same recommendations for Pathway 2 Centralized Alternative.

5.9.2 Greenhouse Gas Emissions

Per MMSD's GHG assessment protocol, a detailed summary of the energy use and Scope 2 emissions for the Null Pathway and Pathway 2 Centralized in 2040 are presented in Table 5.29.

Table 5.29 Design Alternatives Emissions and Energy Use Comparison Table for Pathway 2 (RNG) Centralized

Process Description	Null Pathway (2040)					Pathway 2 Centralized (2040)				
	Operation (hr/day)	Scope 2 Emissions (MT CO_2e/yr)	Energy Used (kWh/yr)	Energy Used per MG Treated (kWh/MG)(1)	Energy Costs ($/yr)(2)	Operation (hr/day)	Scope 2 Emissions (MT CO_2e/yr)	Energy Used (kWh/yr)	Energy Used per MG Treated (kWh/MG)(1)	Energy Costs ($/yr)(2)
Biogas System	22	110	173,000	9.06	33,200	23	220	341,000	17.9	65,500

Notes:
(1) Based on a projected flow of 52.3 mgd in 2040 per Influent Flow and Loading Projections TM (2023).
(2) Based on an energy cost of $0.192/kWh per escalated rate to 2040.

Scope 2 GHG emissions are expected to increase, approximately doubling, under Pathway 2 Centralized as compared to the Null Pathway due to the expected increase in electricity demand to pump hot water throughout the entire site. However, Scope 2 emissions only account for a fraction of overall emissions. Overall emissions are dominated by Scope 1 emissions, specifically emissions from natural gas combustion. Table 5.30 summarizes the major GHG emissions related to the thermal heating system for Pathway 2 Centralized, as compared to the Null Pathway.

Table 5.30 Pathway 2 (RNG) Centralized GHG Emissions

Source(1)	Null Pathway (2040) (MT CO_2e/yr)	Pathway 2 Centralized (2040) (MT CO_2e/yr)
Emissions		
NG Combustion	3,100	6,300
Purchased Electricity	110	220
Total Emissions	3,210	6,520

Notes:
(1) GHG offsets are excluded from the evaluation because the thermal heating system alternatives do not provide any.

Under Pathway 2 Centralized, Scope 1 emissions are expected to increase significantly relative to the Null Pathway due to a major increase in natural gas use for heating to compensate for the loss of the cogeneration engines and the heat previously recovered from them. Consequently, overall emissions are expected to approximately double for Pathway 2 Centralized relative to the Null Pathway.

5.9.3 Capital Costs and Net Present Value

This section summarizes the capital costs and NPV that were developed for Pathway 2 Centralized Alternative. The cost estimate includes capital costs and NPV to implement, operate, and maintain the heating system.

5.9.3.1 Capital Costs

The total project cost for Pathway 2 Centralized Alternative is $19,748,000, based on 2025 dollars. A summary of these costs is provided in Table 5.31. A detailed project cost estimate is provided in

Appendix 5A. This estimated cost includes construction of a new Boiler Building, and all infrastructure and building modifications as discussed in Pathway 1 Centralized Alternative. The construction allowances used in developing the direct costs are noted in Table 5.3.

Table 5.31 Pathway 2 (RNG) Centralized Alterative Project Cost

Description	Percentage	Cost
Direct Costs (includes construction allowances)		$11,448,000
General Conditions Allowance	15%	$1,717,000
Contractor Overhead and Profit	20%	$2,290,000
Bonds and Insurance	3%	$343,000
Total Construction Cost		$15,798,000
Engineering, Legal, and Administrative Fees	15%	$2,370,000
Construction Management	10%	$1,580,000
Total Project Cost Estimate (2025 dollars)		$19,748,000

5.9.3.2 Annual Operations and Maintenance Costs

Pathway 2 Centralized Alternative hot water system annual operation and maintenance costs include the same elements as the Pathway 1 Centralized Alternative. Natural gas associated with Pathway 2 are higher compared with Pathway 1 because there is no cogeneration engine to provide supplemental heat to the hot water system. See Table 5.32 for the annual costs.

5.9.3.3 Net Present Value

The NPV for Pathway 1 Centralized Alternative evaluated the costs associated with the hot water system over the estimated 20-year life of the equipment from 2029 through 2048. The project cost in Table 5.32 was escalated to 2028 dollars. A summary table presenting the NPV of capital and operating costs over a 20-year life is shown in Table 5.32. Cost is expressed as NPV showing the value of the overall project in 2028 dollars. Assumptions used for the analysis are summarized in Section 5.3. The detailed NPV calculations are provided in Appendix 5C.

Table 5.32 Pathway 2 (RNG) Centralized Alternative Net Present Value

	Decentralized Costs
Estimated Project Cost (2028 dollars)	$21,895,000
Annual Costs	$910,000
Natural Gas Cost Hot Water System ($/yr)	$556,000
Natural Gas Cost Gas-Fired Equipment	-
Natural Gas Cost Acid Digesters ($/yr)	$272,000
Electrical Cost ($/yr)	$48,000
Heating Hot Water System O&M Cost, ($/yr)	$34,000
Net Annual Costs/(Revenues), $/year	$910,000
Net Present Value	$40,105,000

5.10 Pathway 2 - Renewable Natural Gas Decentralized Alternative

5.10.1 Basis of Design

The Pathway 2 Decentralized Alternative limits hot water demands. Pathway 2 Decentralized Alternative will provide hot water to the same buildings identified in Pathway 1 Decentralized Alternative. Also similar to Pathway 1 Decentralized Alternative, the same buildings will be served by natural gas. Also similar to Pathway 1 Decentralized Alternative, there will no longer be separate east and west/central loops. All buildings served by hot water will be served by a common hot water loop.

- Hot Water Demands:
  - See Table 5.33 for the hot water demands for the Pathway 2 Decentralized Alternative.

Table 5.33 Estimated Future Peak Heat Demand - Pathway 2 (RNG) Decentralized Alternative

Building	Loop	Building Demand (MBH)	Process Demand (MBH)	Total Demand (MBH)
Cogeneration/Boiler Building	Central	60	0	60
DAF Building	East	220	0	220
Gas Control Building	East	340	0	340
GBT Building	East	960	0	960
GBT Polymer Building	Central	220	0	220
Headworks Building	Central	3,380	0	3,380
Operations Building (Central)	Central	860	0	860
Operations Building (West)	West	2,588	0	2,588
Sludge Control Building No. 1	West	190	430	620
Sludge Control Building No. 2	East	8,200	810	9,010
Sludge Control Building No. 3	East	1,320	560	1,880
Struvite Building	Central	1,270	880	2,150
WAS Thickening Building	East	2,780	0	2,780
	Totals	22,390	2,680	25,070
	Totals if Steam Boilers Removed(1)		8,680	31,070

Notes:
(1) This value reflects the demand of the acid digesters, which are currently supplied by the steam boilers in the WAS Thickening Building and are not currently connected to the hot water system.

- Hot Water Generation:
  - Hot water generation for Pathway 2 Decentralized Alternative is provided only by boilers. This pathway does not recover any heat because there are no cogeneration engines burning digester gas. Similar to Pathway 1 Decentralized Alternative, the redundancy requirements for heat generating equipment assumes one of the East Boilers in SCB2 is out of service. Using this basis, the required capacity of each of the new West Boilers is the same as in the existing boilers (4,184 MBH output capacity) as noted in Table 5.34.

Table 5.34 Estimated Future Hot Water Generation Output Capacity Pathway 2 (RNG) Decentralized Alternative

Location	Equipment	Heat Generation Output Capacity (MBH)	Remarks
Existing Boiler Building	New West Boiler 1	4,180	New equipment; same capacity as existing
Existing Boiler Building	New West Boiler 2	4,180	New equipment; same capacity as existing
Existing Boiler Building	New West Boiler 3	4,180	New equipment; same capacity as existing
SCB2	Existing East Boiler 4	8,220	Existing equipment; no change
SCB2	Existing East Boiler 5	8,220	Existing equipment; no change
SCB2	Existing East Boiler 6	8,220	Existing equipment; no change
	Total Heat Generation Capacity:	37,200	Includes all heat generation equipment being operational
	Design Basis Heat Generation Capacity:	28,980	Assumes both generators and one of the East Boilers in SCB2 are offline

For Pathway 2 Decentralized Alternative, the total heat generation capacity (37,212 MBH) exceeds the total hot water demand (25,068 MBH) by 12,144 MBH. In this situation, there is about 32 percent excess heat generating capacity above the cumulative total demands. The design basis heat generation capacity with one boiler offline is the same as Pathway 1 Decentralized Alternative and includes 22 percent excess heat generating capacity above the cumulative total demands. Similar to Pathway 1 Decentralized Alternative, transporting this heating capacity throughout the site requires piping and pumping modifications.

Because the new West Boilers for Pathway 2 Decentralized Alternative are similar in footprint to the existing West Boilers they could be installed within the existing Boiler Building. For this alternative it is assumed the new west boilers will be installed in the existing Boiler Building. See Figure 5.23 for the new site hot water schematic for the Pathway 2 Decentralized Alternative.

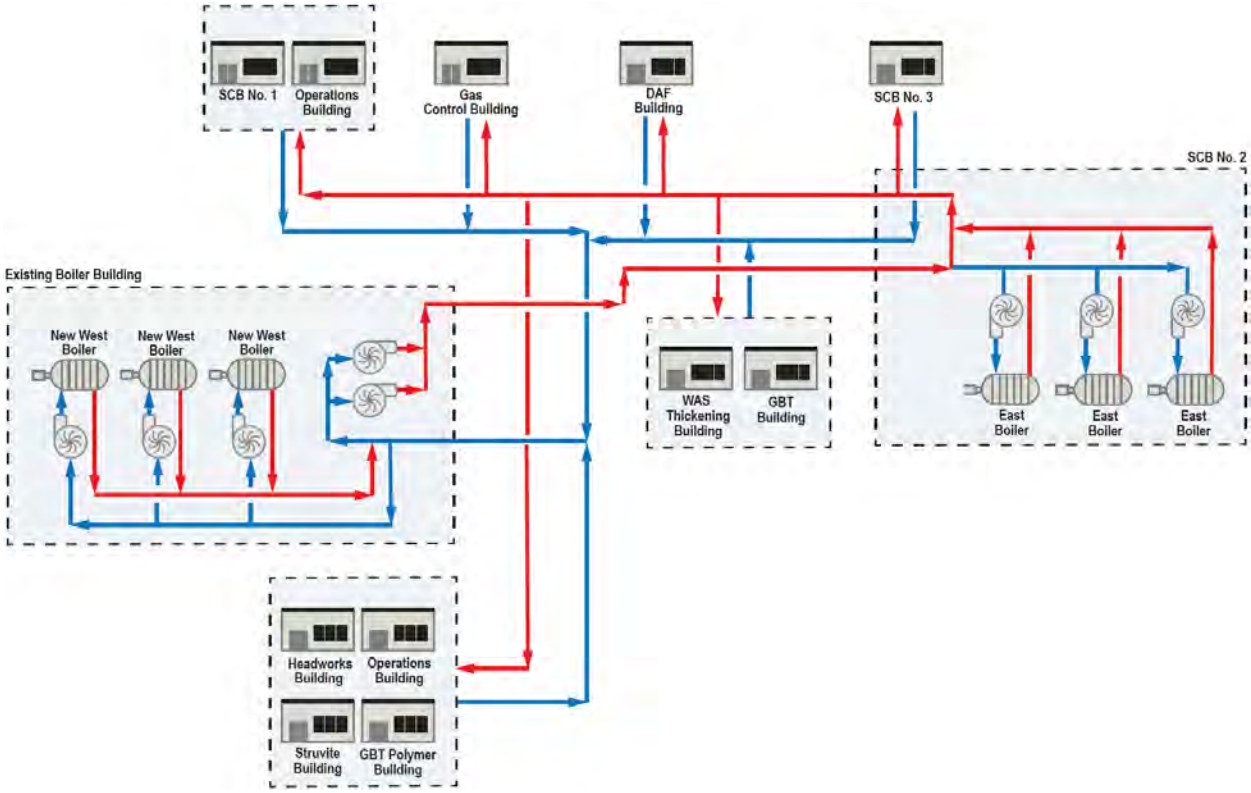

Figure 5.23 Proposed Future Hot Water Schematic - Pathway 2 (RNG) Decentralized Alternative

Similar to Pathway 2 Centralized Alternative, if the absorption chiller were to fail it is not recommended to be replaced with another absorption chiller. A water-cooled chiller is proposed to replace the absorption chiller in the future when it fails.

Other than the Operations Building, the recommendations for each building discussed in Pathway 1 Decentralized Alternative are the same recommendations for Pathway 2 Decentralized Alternative.

5.10.2 Greenhouse Gas Emissions

Per MMSD's GHG assessment protocol, a detailed summary of the energy use and Scope 2 emissions for the Null Pathway and Pathway 2 Decentralized in 2040 are presented in Table 5.35.

Table 5.35 Design Alternatives Emissions and Energy Use Comparison Table for Pathway 2 (RNG) Decentralized

Process Description	Null Pathway (2040)					Pathway 2 Decentralized (2040)				
	Operation (hr/day)	Scope 2 Emissions (MT CO_2e/yr)	Energy Used (kWh/yr)	Energy Used per MG Treated (kWh/MG)(1)	Energy Costs ($/yr)(2)	Operation (hr/day)	Scope 2 Emissions (MT CO_2e/yr)	Energy Used (kWh/yr)	Energy Used per MG Treated (kWh/MG)(1)	Energy Costs ($/yr)(2)
Biogas System	22	110	173,000	9.06	33,200	23	100	158,000	8.28	30,300

Notes:
(1) Based on a projected flow of 52.3 mgd in 2040 per Influent Flow and Loading Projections TM (2023).
(2) Based on an energy cost of $0.192/kWh per escalated rate to 2040.

Scope 2 GHG emissions are expected to remain approximately the same under Pathway 2 Decentralized as compared to the Null Pathway. However, Scope 2 emissions only account for a fraction of overall emissions. Overall emissions are dominated by Scope 1 emissions, specifically emissions from natural gas combustion. Table 5.36 summarizes the major GHG emissions related to the thermal heating system for Pathway 2 Decentralized, as compared to the Null Pathway.

Table 5.36 Pathway 2 (RNG) Decentralized GHG Emissions

Source(1)	Null Pathway (2040) (MT CO_2e/yr)	Pathway 2 Decentralized (2040) (MT CO_2e/yr)
Emissions		
NG Combustion	3,100	6,200
Purchased Electricity	110	100
Total Emissions	3,210	6,300

Notes:
(1) GHG offsets are excluded from the evaluation because the thermal heating system alternatives do not provide any.

Under Pathway 2 Decentralized, Scope 1 emissions are expected to increase significantly relative to the Null Pathway due to a major increase in natural gas use for heating to compensate for the loss of the cogeneration engines and the heat previously recovered from them. Consequently, overall emissions are expected to approximately double for Pathway 2 Decentralized relative to the Null Pathway.

5.10.3 Capital Costs and Net Present Value

This section summarizes the capital costs and the NPV that were developed for Pathway 2 Decentralized Alternative. The cost estimate includes capital and O&M costs to implement, operate, and maintain the heating system.

5.10.3.1 Capital Costs

The total project cost for Pathway 2 Decentralized Alternative is $11,711,000. A summary of these costs is provided in Table 5.37. A detailed project cost estimate is provided in Appendix 5A. This cost includes all infrastructure and building modifications as discussed in Pathway 1 Decentralized Alternative. The construction allowances used in developing the direct costs are noted in Table 5.3.

Table 5.37 Pathway 2 (RNG) Decentralized Alterative Project Cost

Description	Percentage	Cost
Direct Costs (includes construction allowances)		$6,789,000
General Conditions Allowance	15%	$1,018,000
Contractor Overhead and Profit	20%	$1,358,000
Bonds and Insurance	3%	$204,000
Total Construction Cost		$9,369,000
Engineering, Legal, and Administrative Fees	15%	$1,405,000
Construction Management	10%	$937,000
Total Project Cost Estimate		$11,711,000

5.10.3.2 Annual Operations and Maintenance Costs

Pathway 2 Decentralized Alternative hot water system annual operation and maintenance costs include the same elements as the Pathway 1 Decentralized Alternative. Natural gas associated with Pathway 2 are

higher compared with Pathway 1 because there is no cogeneration engine to provide supplemental heat to the hot water system. See Table 5.38 for the annual costs.

5.10.3.3 Net Present Value

The NPV for Pathway 2 Decentralized Alternative evaluated the costs associated with the hot water system over the estimated 20-year life of the equipment from 2029 through 2048. The project cost in Table 5.38 was escalated to 2028 dollars. A summary table presenting the NPV of capital and operating costs over a 20-year life is shown in Table 5.38. Cost is expressed as NPV showing the value of the overall project in 2028 dollars. Assumptions used for the analysis are summarized in Section 5.3.

Table 5.38 Pathway 2 (RNG) Decentralized Alternative Estimated Net Present Value

Description	Decentralized Costs
Estimated Project Cost (2028 dollars)	$12,984,000
Annual Costs	$867,000
Natural Gas Cost Hot Water System ($/yr)	$248,000
Natural Gas Cost Gas-Fired Equipment	$291,000
Natural Gas Cost Acid Digesters ($/yr)	$272,000
Electrical Cost ($/yr)	$22,000
Heating Hot Water System O&M Cost, ($/yr)	$34,000
Net Annual Costs/(Revenues), $/year	$868,000
Net Present Value	$30,342,000

5.11 Decision Criteria

5.11.1 Financial Considerations

5.11.1.1 Capital Costs

Table 5.39 compares the project costs for the different pathways and their alternatives.

Table 5.39 Estimated Project Cost Comparison

Description	Null Pathway	Pathway 1 Centralized Alternative	Pathway 1 Decentralized Alternative	Pathway 2 Centralized Alternative	Pathway 2 Decentralized Alternative
Direct Costs (includes construction allowances)	$1,889,000	$11,448,000	$8,824,000	$11,448,000	$6,789,000
General Conditions Allowance	$283,000	$1,717,000	$1,324,000	$1,717,000	$1,018,000
Contractor Overhead and Profit	$378,000	$2,290,000	$1,765,000	$2,290,000	$1,358,000
Bonds and Insurance	$57,000	$343,000	$265,000	$343,000	$204,000
Total Construction Cost	$2,607,000	$15,798,000	$12,178,000	$15,798,000	$9,369,000
Engineering, Legal, and Administrative Fees	$391,000	$2,370,000	$1,827,000	$2,370,000	$1,405,000
Construction Management	$261,000	$1,580,000	$1,218,000	$1,580,000	$937,000
Total Project Cost Estimate	$3,259,000	$19,748,000	$15,223,000	$19,748,000	$11,711,000

The capital cost to implement Pathway 1 Centralized Alternative and Pathway 2 Centralized Alternative is approximately 70 percent more than the least expensive alternative, Pathway 2 Decentralized Alternative. This is primarily a result of the centralized alternatives requiring a new boiler building and larger boilers. Pathway 1 Decentralized Alternative is approximately 30 percent more than Pathway 2 Decentralized Alternative. This is primarily because the West Boilers fit in the existing Boiler Building for Pathway 2. There is no payback period that was calculated for the thermal considerations and there were no significant energy efficiency differences between the alternatives.

5.11.1.2 Net Present Value

Table 5.40 compares the NPV for operation of the hot water system for the different pathways and their alternatives.

Table 5.40 Estimated Net Present Value Comparison

	Null Pathway	Pathway 1 Centralized Alternative	Pathway 1 Decentralized Alternative	Pathway 2 Centralized Alternative	Pathway 2 Decentralized Alternative
Estimated Project Cost (2028 dollars)	$3,614,000	$21,895,000	$16,878,000	$21,895,000	$12,984,000
Annual Costs	$464,000	$508,000	$509,000	$910,000	$867,000
Natural Gas Cost Hot Water System ($/yr)	$406,000	$154,000	$41,000	$556,000	$248,000
Natural Gas Cost Gas-Fired Equipment ($/yr)	-	-	$140,000	-	$291,000
Natural Gas Cost Acid Digesters ($/yr)	-	$272,000	$272,000	$272,000	$272,000
Electrical Cost ($/yr)	$24,000	$48,000	$22,000	$48,000	$22,000
Heating Hot Water System O&M Cost, ($/yr)	$34,000	$34,000	$34,000	$34,000	$34,000
Net Annual Costs/(Revenues), $/year	$464,000	$508,000	$509,000	$910,000	$867,000
Net Present Value	$12,907,000	$32,070,000	$27,078,000	$40,105,000	$30,342,000

Below is a list summarizing differences in the annual costs:

- The hot water system natural gas costs are higher for Pathway 2 than Pathway 1. This is because Pathway 2 cannot take advantage of the heat recovered from the cogeneration engines.
- The hot water system natural gas costs for Pathway 1 Centralized Alternative are lower than Pathway 1 Decentralized Alternative. The Centralized Alternative uses only natural gas for the boilers and the Decentralized Alternative uses it for both the boilers and HVAC equipment directly. Therefore, the Centralized Alternative can utilize the heat recovered from the cogeneration engines to a greater extent than the Decentralized Alternative.

- The hot water system natural gas costs for Pathway 2 Decentralized Alternative are lower than Pathway 2 Centralized Alternative. This is due to the higher efficiency of the natural gas fired equipment.
- The electrical usage associated with both Centralized Alternatives is higher compared with the Decentralized Alternatives because the Decentralized Alternatives have a smaller hot water system and lower system hot water flowrates (lower pump horsepower required).
- As noted in the planning criteria section, the maintenance costs are assumed to be 2 percent of HVAC system costs. For planning purposes, this was assumed to be similar between the alternatives.

5.11.2 Operations and Maintenance

5.11.2.1 Operational Complexity/Difficulty

Regarding operation, as has been discussed with MMSD, the existing hot water distribution system is difficult to achieve consistent temperature throughout the system. All pathways and their alternatives will be provided with additional control and monitoring. In all pathways and their alternatives, this additional control will inform a centralized control system. The operation of new pumps and boilers will be similar to the existing system and familiar to MMSD. There is no significant difference between the pathways but the Centralized Alternatives have a larger hot water system requiring more monitoring of the water chemistry and more pumps.

For Pathway 1, the operation of the cogeneration engines will provide heat to the hot water system, and in the winter months all heat provided by the cogeneration engines will be used in both the Centralized and Decentralized Alternatives. From an operational perspective, there is a significant portion of the year when the engines will produce more heat than is required in the hot water system. This is especially the case for the Decentralized Alternative.

5.11.2.1 Operational Response/Risk/Runtime

Regarding maintenance, all pathways and their alternatives include similar quantities of boilers and hot water distribution pumps. The Centralized Alternative hot water system is larger and more expansive. This larger hot water system will include more valves and piping to maintain. The Decentralized Alternative will include additional gas-fired equipment, which will also require maintenance. The proposed boilers and pumps for the Centralized and Decentralized Alternatives are similar to the existing equipment and MMSD will be familiar with the maintenance related to these items.

5.11.3 Implementation

5.11.3.1 Future Site Flexibility

For the Centralized Alternative, the new West Boilers will be installed in a new building. This will permit the new boilers to be installed and started before needing to take any existing hot water generating equipment offline. The new building will assist with staging and sequencing to maintain operation.

For the Decentralized Alternative, it is proposed that the new West Boilers be installed in the existing Boiler Building. For the Decentralized Alternative, new pumps and piping will require modifications to the layout of the existing Boiler Building. This can also be staged and sequenced, but requires additional coordination compared with the Centralized Alternative.

In general, it is easier to provide future expansion for a natural gas system compared to a hot water system. The natural gas piping can be sized for potential future capacity with no detriment to current operation. Any future expansion of a hot water system may require increasing the size of hot water distribution piping, boilers, and pumps.

5.11.4 Other

5.11.4.1 Market Risk

There are no market considerations for the hot water system in any of the pathways or their alternatives.

5.11.4.2 Energy Recovery

Pathway 1 is able to recover energy from the cogeneration engines. This leads to a significant difference in the energy recovery scoring, favoring both Pathway 1 alternatives. The Decentralized Alternative efficiency is not comparably different to the Centralized Alternative, but the Decentralized Alternative hot water system will use less energy because of a smaller hot water system and lower flowrates.

5.11.4.3 Outside Dependence

Regarding outside dependance, both pathways and their alternatives rely on electricity and natural gas. Any interruption of these services would impact both alternatives. In the event of a natural gas interruption, a cogeneration system will provide heat to the hot water system, but depending on the season in which an interruption occurs it may not be sufficient to meet the thermal demands of the plant without additional natural gas. Pathway 1 scores higher than Pathway 2 for outside dependence. In Pathway 1, the Centralized Alternative is less outside dependent compared to the Decentralized Alternative because the hot water system connects to more buildings and can spread the heat recovered from the cogeneration engines throughout the site.

5.12 Recommendations

This section compares Pathways 1 and 2 and their alternatives based on the decision criteria outlined in Section 5.11. Table 5.41 presents a summary of how each pathway meets the criteria and Table 5.42 provides quantitative scoring using the weighting agreed upon in Workshop 0/1 and documented in TM 1.

Table 5.41 Review of Pathways 1 (Cogen) and 2 (RNG) Based on Decision Criteria

Category	Criteria	Pathway 1 Centralized Alternative	Pathway 1 Decentralized Alternative	Pathway 2 Centralized Alternative	Pathway 2 Decentralized Alternative
Financial	Capital Costs	This alternative is the most expensive due primarily to the need for a new boiler building and piping costs.	Capital costs are lower than Pathway 1 Centralized Alternative due to lower site piping costs.	Similar cost to Pathway 1 Centralized Alternative.	This is the least cost alternative due primarily to the smaller boilers and ability to reuse existing infrastructure.
	Life Cycle Costs	This alternative has the benefit of capturing heat from the cogeneration engines, lowering operation costs. This is lower than the Pathway 2 life cycle costs.	Similar to Pathway 1 Centralized Alternative. The cost is lower due to Decentralized Alternative having a lower capital cost.	This is the highest life cycle cost. This alternative does not capture any heat and has a higher operation cost.	Similar to Pathway 2 Centralized Alternative. The cost is lower due to Decentralized Alternative having a lower capital cost.
O&M	Operational Complexity/ Difficulty	Future operation will include a central control system for all hot water system components. Equipment serving the hot water system is familiar to MMSD. This alternative includes a larger hot water system, which requires monitoring of water chemistry and pumps for a large system.	Future operation will include a central control system for all hot water system components. Equipment serving the hot water system is familiar to MMSD.	Similar to Pathway 1 Centralized Alternative.	Similar to Pathway 1 Decentralized Alternative.
	Operational Response/ Risk/Uptime	Centralized Alternative includes more hot water generating equipment and the hot water system is more redundant compared with the Decentralized Alternative.	This alternative includes natural gas fired equipment serving buildings, which is not reliant on the hot water system.	Similar to Pathway 1 Centralized Alternative, but does not include the cogeneration engines as a heat source. Therefore, this alternative has less redundancy of hot water generating.	Similar to Pathway 2 Centralized Alternative and Pathway 1 Decentralized Alternative. This alternative does not include cogeneration engines so there is less redundancy.

Category	Criteria	Pathway 1 Centralized Alternative	Pathway 1 Decentralized Alternative	Pathway 2 Centralized Alternative	Pathway 2 Decentralized Alternative
Implementation	Future Site Flexibility	Future expansion of process-related or other infrastructure would require upsizing hot water piping and hot water pumps.	For infrastructure served by natural gas, future expansion would be easy to accommodate. Other infrastructure served by hot water would be similar to the Centralized Alternative.	Similar to Pathway 1 Centralized Alternative.	Similar to Pathway 1 Decentralized Alternative.
Other	Market Risk	Not Applicable	Not Applicable	Not Applicable	Not Applicable
	Energy Recovery	This option benefits most from the energy provided to the hot water system from the cogeneration engines.	Similar to Pathway 1 Centralized Alternative but the hot water demand is lower so there is more excess heat that is rejected.	This option does not have the benefit of energy capture from the cogeneration engine.	Similar to Pathway 2 Centralized Alternative.
	Outside Dependence	If there is interruption of natural gas service to the Nine Springs Facility, the cogeneration engines will help to supplement plant hot water needs.	Similar to Pathway 1 Centralized Alternative but the gas-fired equipment will be down if the natural gas service is interrupted.	Fully dependent on outside energy sources.	Fully dependent on outside energy sources.

Table 5.42 shows the quantitative scoring for each of the criteria previously discussed for all pathways and their alternatives on a scale of 1-5 with 5 being good and 1 being bad. The scores were weighted based on the predetermined weighting scale in Table 5.5 and the values were totalized to provide an overall score for each pathway and alternative.

Table 5.42 Quantitative Scoring of Decision Criteria

Category	Criteria	Weight	Pathway 1 (Cogen) Centralized	Pathway 1 (Cogen) Decentralized	Pathway 2 (RNG) Centralized	Pathway 2 (RNG) Decentralized
Financial	Capital Costs (2025$)	14%	2	3	2	4
	Life Cycle Costs	20%	4	4	2	2
O&M	Operational Complexity/Difficulty	14%	3	3	3	3
	Operational Response/Risk/Uptime	9%	4	5	3	4
Implementation	Future Site Flexibility	9%	2	3	2	3
Other	Market Risk	12%	5	5	5	5
	Energy Recovery	10%	4	3	1	1
	Outside Dependence	12%	4	3	1	1
Total Weighted Average			3.52	3.62	2.37	2.83

Both alternatives in Pathway 1 scored higher than the alternances in Pathway 2. This is primarily due to the heat recovered from the Cogeneration engines lowering the operation costs while improving energy recovery and outside dependence.

For both pathways, the decentralized alternatives scored higher than the centralized alternatives. This is due to lower capital costs while improving on operational response/risk/uptime and future site flexibility.

Based on the evaluation completed and a review of all the pathways and alternatives it is clear, Pathway 2 Centralized Alternative has a low score and would not be recommended. The remaining alternatives are all feasible for the Nine Springs Wastewater Treatment Plant.

The heating system recommendation depends on the selected pathway. For Pathway 1, the recommendation would be the Centralized Alternative. Even though the Decentralized Alternative scores higher than the Centralized Alternative. The Centralized Alternative allows for the most heat to be recovered from the Cogeneration Engines.

For Pathway 2, the recommendation would be the Decentralized Alternative. This alternative has the lowest capital cost of the four alternatives. In Pathway 2 here are no cogeneration engines to recover heat, therefore a large and expansive heating hot water system is no longer sensible. If Pathway 2 is selected it is preferable to move demands to gas-fired equipment where possible

5.13 Combined Scoring

The previous review in this tech memo is for TM 5 only. While this is a standalone tech memo, this will be a combined future project with TM 4. The following section is the combined NPV and scoring for each alternative in both pathways.

Table 5.43 shows the combined NPV for TM 4 and TM 5. The values in parentheses in the table below are revenues.

Table 5.43 Combined Estimated Net Present Value

Combined NPV Costs for All Alternatives					
Biogas and Hot Water Pathways	Null Pathway	Pathway 1 (Cogen) Centralized Alternative	Pathway 1 (Cogen) Decentralized Alternative	Pathway 2 (RNG) Centralized Heating Alternative	Pathway 2 (RNG) Decentralized Alternative
Biogas O&M Annual(1)	($416,000)	($2,218,000)		($4,495,000)	
Hot Water O&M Annual(2)	$58,000	$82,000	$196,000	$82,000	$347,000
Biogas + Hot Water Annual O&M	($358,000)	($2,136,000)	($2,022,000)	($4,413,000)	(4,148,000)
Biogas + Hot Water Capital Cost Estimate (2028 Dollars)(3)	$4,226,000	$51,402,000	$46,385,000	$50,247,000	$41,336,000
Simple Payback	12 years	24 years	23 years	11 years	10 years
Total Combined Weighted Score	2.5	3.3	3.4	3.0	3.5

Notes:
(1) Values shown in parentheses are revenues.
(2) Natural gas costs for hot water and digester heating are not included to avoid double-counting as they are included in biogas O&M costs. Hot water O&M costs include natural gas cost for gas-fired equipment, electricity for HVAC systems and HVAC equipment O&M.
(3) Capital costs are shown in 2028 dollars in this table for NPV calculations.

Table 5.44 shows the combined project quantitative scoring of decision criteria for TM 4 and TM 5.

Table 5.44 Combined Quantitative Scoring of Decision Criteria

Category	Criteria	Weight	Null Pathway	Pathway 1 - Cogen		Pathway 2 – RNG	
				Centralized	Decentralized	Centralized	Decentralized
Financial	Capital Costs (2025 $)	14%	5	2	3	2	4
	Life Cycle Costs (2028 $)	20%	1	3	3	5	5
O&M	Operational Complexity/Difficulty	14%	2	3	3	3	3
	Operational Response/Risk/Uptime	9%	1	4	5	3	4
Implementation	Future Site Flexibility	9%	2	2	3	2	3
Other	Market Risk	12%	4	4	4	2	2
	Energy Recovery	10%	2	4	3	5	5
	Outside Dependence	12%	3	5	4	1	1
Total Weighted Average			2.49	3.32	3.42	3.01	3.47

Based on the evaluation completed and a review of all the pathways and alternatives, the Pathway 2 Decentralized Alternative has the highest combined scoring and will be evaluated further as part of the Facilities Plan. This is due to its high scoring in both the cost criteria and the energy recovery criteria.

APPENDIX 5A

PROJECT COST ESTIMATES

Madison Metropolitan Sewerage District

carollo

PROJECT :	MMSD Heat and Power Improvements	**ESTIMATE CLASS:**	4
CLIENT:	Madison Metropolitan Sewerage District	**PREPARED BY:**	
JOB # :		**DATE PREPARED:**	
		REVIEWED BY:	ADG
FACILITY:	Null Alternative	**DATE:**	11-Apr-25

ITEM	DESCRIPTION	QTY	UNIT	UNIT COST	TOTAL
SUMMARY OF CONSTRUCTION COSTS					
Equipment					
	West Boilers	3	LS	$ 275,000	$ 825,000
	SUBTOTAL EQUIPMENT AND ITEMIZED DIRECT COSTS				**$ 825,000**
	ALLOWANCE FOR CONSTRUCTION SERVICES				
	Structural/Architectural Allowance	10%			$ 83,000
	Mechanical System Allowance (HVAC, Plumbing, etc.)	25%			$ 206,000
	Electrical, I&C, Programming Allowance	20%			$ 165,000
	Piping/Valves Within Building Allowance	15%			$ 124,000
	Start-up and Commissioning Allowance	1	LS	$ 50,000	$ 50,000
				Subtotal	**$ 1,453,000**
	Construction Contingency	30%			$ 436,000
	SUBTOTAL DIRECT COSTS				**$ 1,889,000**
	CONTRACTOR MARKUPS, TAXES, AND ESCALATION				
	General Conditions Allowance	15%			$ 283,000
	Contractor Overhead, Profit	20%			$ 378,000
	Bonds and insurance	3%			$ 57,000
	TOTAL CONSTRUCTION COST				**$ 2,607,000**
TOTAL PROJECT COST ALLOWANCES (NON-CONSTRUCTION)					
	Engineering, Legal and Administrative fees	15%			$ 391,000
	Construction Management	10%			$ 261,000
	TOTAL PROJECT COST ESTIMATE =				**$ 3,259,000**
	Sum of equipment cost (w/o 20% install)				$ 687,500.00

Madison Metropolitan Sewerage District

carollo

ESTIMATE CLASS: 4

PROJECT : MMSD Heat and Power Improvements
CLIENT: Madison Metropolitan Sewerage District
JOB # :
FACILITY: Pathway 1 & 2: Centralized Alternative

PREPARED BY:
DATE PREPARED:
REVIEWED BY:
DATE:

ITEM	DESCRIPTION	QTY	UNIT	UNIT COST	TOTAL
SUMMARY OF CONSTRUCTION COSTS					
Structures - Cogeneration/Boiler Building					
	Boiler Building 40ft x 60ft	1	LS	$1,500,000	$ 1,500,000
				COGENERATION BUILDING SUBTOTAL	$ 1,500,000
Equipment					
	West Boilers	3	LS	$ 350,000	$ 1,050,000
	Hot Water Pumps	6	LS	$ 25,000	$ 150,000
	HVAC Equipment (Make-up Air Units, Unit Heaters, etc.)	1	LS	$ 450,000	$ 450,000
				SUBTOTAL EQUIPMENT AND SALVAGE COSTS	$ 1,650,000
				SUBTOTAL EQUIPMENT, SALVAGE AND ITEMIZED DIRECT COSTS	**$ 3,150,000**
	ALLOWANCE FOR CONSTRUCTION SERVICES				
	Structural/Architectural Allowance	10%			$ 315,000
	Mechanical System Allowance (HVAC, Plumbing)	25%			$ 788,000
	Electrical, I&C, Programming Allowance	20%			$ 630,000
	Piping/Valves Within Building Allowance	15%			$ 473,000
	Site Piping Allowance	1	LS	$ 3,400,000	$ 3,400,000
	Start-up and Commissioning Allowance	1	LS	$ 50,000	$ 50,000
				SUBTOTAL	**$ 8,806,000**
	Construction Contingency	30%	%		$ 2,641,800
				SUBTOTAL DIRECT COSTS	**$ 11,448,000**
	CONTRACTOR MARKUPS, TAXES, AND ESCALATION				
	General Conditions	15%			$ 1,717,000
	Contractor Overhead, Profit	20%			$ 2,290,000
	Bonds and Insurance	3%			$ 343,000
				TOTAL CONSTRUCTION COST	**$ 15,798,000**
TOTAL PROJECT COST ALLOWANCES (NON-CONSTRUCTION)					
	Engineering, Legal, and Administrative fees	15%			$ 2,370,000
	Construction Management	10%			$ 1,580,000
				TOTAL PROJECT COST ESTIMATE =	**$ 19,748,000**
				Sum of equipment cost (w/o 20% install)	$ 1,375,000.0

Madison Metropolitan Sewerage District

carollo

		ESTIMATE CLASS:	4
PROJECT :	MMSD Heat and Power Improvements	PREPARED BY:	
CLIENT:	Madison Metropolitan Sewerage District	DATE PREPARED:	
JOB # :		REVIEWED BY:	ADG
FACILITY:	Pathway 1: Decentralized Alternative	DATE:	11-Apr-25

ITEM	DESCRIPTION	QTY	UNIT	UNIT COST	TOTAL
SUMMARY OF CONSTRUCTION COSTS					
Structures - Cogeneration/Boiler Building					
	Boiler Building	1	LS	$1,500,000	$ 1,500,000
				COGENERATION BUILDING SUBTOTAL	$ 1,500,000
Equipment					
	West Boilers	3	LS	$ 300,000	$ 900,000
	Hot Water Pumps	6	LS	$ 15,000	$ 90,000
	HVAC Equipment (Make-up Air Units, Unit Heaters, etc.)	1	LS	$ 650,000	$ 650,000
				SUBTOTAL EQUIPMENT AND SALVAGE COSTS	$ 1,640,000
				SUBTOTAL EQUIPMENT AND ITEMIZED DIRECT COSTS	**$3,140,000**
	ALLOWANCE FOR CONSTRUCTION SERVICES				
	Structural/Architectural Allowance	10%			$ 314,000
	Mechanical System Allowance (HVAC, Plumbing, etc.)	25%			$ 785,000
	Electrical, I&C, Programming Allowance	20%			$ 628,000
	Piping/Valves Within Building Allowance	15%			$ 471,000
	Site Piping (Natrual Gas and Hot Water)	1	LS	$ 1,400,000	$ 1,400,000
	Start-up and Commissioning Allowance	1	LS	$ 50,000	$ 50,000
				Subtotal	**$ 6,788,000**
	Construction Contingency	30%			$ 2,036,000
				SUBTOTAL DIRECT COSTS	**$ 8,824,000**
	CONTRACTOR MARKUPS, TAXES, AND ESCALATION				
	General Conditions Allowance	15%			$ 1,324,000
	Contractor Overhead, Profit	20%			$ 1,765,000
	Bonds and insurance	3%			$ 265,000
				TOTAL CONSTRUCTION COST	**$ 12,178,000**
TOTAL PROJECT COST ALLOWANCES (NON-CONSTRUCTION)					
	Engineering, Legal and Administrative fees	15%			$ 1,827,000
	Construction Management	10%			$ 1,218,000
				TOTAL PROJECT COST ESTIMATE =	**$ 15,223,000**
				Sum of equipment cost (w/o 20% install)	$ 1,366,666.67

Madison Metropolitan Sewerage District

carollo

		ESTIMATE CLASS:	4
PROJECT :	MMSD Heat and Power Improvements	PREPARED BY:	
CLIENT:	Madison Metropolitan Sewerage District	DATE PREPARED:	
JOB # :		REVIEWED BY:	ADG
FACILITY:	Pathway 2: Decentralized Alternative	DATE:	11-Apr-25

ITEM	DESCRIPTION	QTY	UNIT	UNIT COST	TOTAL
SUMMARY OF CONSTRUCTION COSTS					
Equipment					
	West Boilers	3	LS	$ 300,000	$ 900,000
	Hot Water Pumps	6	LS	$ 15,000	$ 90,000
	HVAC Equipment (Make-up Air Units, Unit Heaters, etc.)	1	LS	$ 650,000	$ 650,000
	SUBTOTAL EQUIPMENT AND SALVAGE COSTS				$ 1,640,000
	SUBTOTAL EQUIPMENT AND ITEMIZED DIRECT COSTS				**$1,640,000**
	ALLOWANCE FOR CONSTRUCTION SERVICES				
	Structural/Architectural Allowance	20%			$ 328,000
	Mechanical System Allowance (HVAC, Plumbing, etc.)	45%			$ 738,000
	Electrical, I&C, Programming allowance	40%			$ 656,000
	Piping/Valves Within Building Allowance	25%			$ 410,000
	Site Piping (Natrual Gas and Hot Water)	1	LS	$ 1,400,000	$ 1,400,000
	Start-up and Commissioning Allowance	1	LS	$ 50,000	$ 50,000
				Subtotal	**$ 5,222,000**
	Construction Contingency	30%			$ 1,567,000
	SUBTOTAL DIRECT COSTS				**$ 6,789,000**
	CONTRACTOR MARKUPS, TAXES, AND ESCALATION				
	General Conditions Allowance	15%			$ 1,018,000
	Contractor Overhead, Profit	20%			$ 1,358,000
	Bonds and insurance	3%			$ 204,000
	TOTAL CONSTRUCTION COST				**$ 9,369,000**
TOTAL PROJECT COST ALLOWANCES (NON-CONSTRUCTION)					
	Engineering, Legal and Administrative fees	15%			$ 1,405,000
	Construction Management	10%			$ 937,000
	TOTAL PROJECT COST ESTIMATE =				**$ 11,711,000**
	Sum of equipment cost (w/o 20% install)				$ 1,366,666.67

Madison Metropolitan Sewerage District

carollo

PROJECT :	MMSD Heat and Power Improvements	**ESTIMATE CLASS:**	4
CLIENT:	Madison Metropolitan Sewerage District	**PREPARED BY:**	
JOB # :		**DATE PREPARED:**	
		REVIEWED BY:	ADG
FACILITY:	Effluent Building - Gas-fired	**DATE:**	11-Apr-25

ITEM	DESCRIPTION	QTY	UNIT	UNIT COST	TOTAL
SUMMARY OF CONSTRUCTION COSTS					
Equipment					
	Gas-fired AHU (Quantity - 1)	1	LS	$ 35,000	$ 35,000
	SUBTOTAL EQUIPMENT AND SALVAGE COSTS				$ 35,000
	SUBTOTAL EQUIPMENT AND ITEMIZED DIRECT COSTS				**$35,000**
	ALLOWANCE FOR CONSTRUCTION SERVICES				
	Structural/Architectural Allowance	20%			$ 7,000
	Mechanical System Allowance (HVAC, Plumbing, etc.)	75%			$ 26,000
	Electrical, I&C, Programming allowance	60%			$ 21,000
	Piping/Valves Within Building Allowance	40%			$ 14,000
	Start-up and Commissioning Allowance	1	LS	$ 50,000	$ 50,000
				Subtotal	**$ 153,000**
	Construction Contingency	30%			$ 46,000
	SUBTOTAL DIRECT COSTS				**$ 199,000**
	CONTRACTOR MARKUPS, TAXES, AND ESCALATION				
	General Conditions Allowance	15%			$ 30,000
	Contractor Overhead, Profit	20%			$ 40,000
	Bonds and insurance	3%			$ 6,000
	TOTAL CONSTRUCTION COST				**$ 275,000**
TOTAL PROJECT COST ALLOWANCES (NON-CONSTRUCTION)					
	Engineering, Legal and Administrative fees	15%			$ 41,000
	Construction Management	10%			$ 28,000
	TOTAL PROJECT COST ESTIMATE =				**$ 344,000**
	Sum of equipment cost (w/o 20% install)				$ 29,166.67

Madison Metropolitan Sewerage District

carollo

PROJECT :	MMSD Heat and Power Improvements	**ESTIMATE CLASS:**	4
CLIENT:	Madison Metropolitan Sewerage District	**PREPARED BY:**	
JOB # :		**DATE PREPARED:**	
		REVIEWED BY:	ADG
FACILITY:	Effluent Building - Effluent Heat Recovery	**DATE:**	11-Apr-25

ITEM	DESCRIPTION	QTY	UNIT	UNIT COST	TOTAL
SUMMARY OF CONSTRUCTION COSTS					
Equipment					
	Effluent Heat Recovery AHU (Quantity - 1)	1	LS	$ 250,000	$ 250,000
	SUBTOTAL EQUIPMENT AND SALVAGE COSTS				$ 250,000
	SUBTOTAL EQUIPMENT AND ITEMIZED DIRECT COSTS				**$250,000**
	ALLOWANCE FOR CONSTRUCTION SERVICES				
	Structural/Architectural Allowance	20%			$ 50,000
	Mechanical System Allowance (HVAC, Plumbing, etc.)	75%			$ 188,000
	Electrical, I&C, Programming allowance	60%			$ 150,000
	Piping/Valves Within Building Allowance	40%			$ 100,000
	Start-up and Commissioning Allowance	1	LS	$ 50,000	$ 50,000
				Subtotal	**$ 788,000**
	Construction Contingency	30%			$ 236,000
	SUBTOTAL DIRECT COSTS				**$ 1,024,000**
	CONTRACTOR MARKUPS, TAXES, AND ESCALATION				
	General Conditions Allowance	15%			$ 154,000
	Contractor Overhead, Profit	20%			$ 205,000
	Bonds and insurance	3%			$ 31,000
	TOTAL CONSTRUCTION COST				**$ 1,414,000**
TOTAL PROJECT COST ALLOWANCES (NON-CONSTRUCTION)					
	Engineering, Legal and Administrative fees	15%			$ 212,000
	Construction Management	10%			$ 141,000
	TOTAL PROJECT COST ESTIMATE =				**$ 1,767,000**
	Sum of equipment cost (w/o 20% install)				$ 208,333.33

APPENDIX 5B

VENDOR CUTSHEETS

Scotch Marine Boiler

CBLE-4D

50-800 HP

Boiler Book

CBLE-4D boilers combine induced flue gas recirculation with the Cleaver-Brooks integral front head. The front head routes the flue gases from the fourth pass to the fan and burner assembly for reliable low NOx performance. The enhanced burner design assures maximum NOx reduction at all firing rates while maintaining top of the line boiler performance.

Standard Low Emission Options include 60, 30, or 20 ppm packages (all NOx emission levels are given on a dry volume basis and corrected to 3% O_2):

- NOx performance for 60 ppm (natural gas corrected to 3% O_2) uses a standard size combustion air fan for induced flue gas recirculation.
- NOx performance for 30 or 20 ppm (natural gas corrected to 3% O_2) includes a larger combustion air fan/motor assembly and a larger internal NOx reduction system.

Cleaver-Brooks' commitment to lowering emissions is based on more than 400 low NOx installations - all passing guaranteed emission performance levels.

FEATURES AND BENEFITS

The Cleaver-Brooks Model CBLE-4D Boiler includes a four-pass dryback design, five square feet of heating surface per boiler horsepower, and maximum boiler efficiency. Additional features include the following:

Integral Front Head Design

- Single-piece front door.
- Fan cassette assembly for easy access to fan and motor.
- Guaranteed low nitrogen oxide (NOx) performance.
- Enhanced burner performance.
- Improved flame stability and combustion control.
- Intimate mixing of air and fuel assures minimum CO levels at low NOx levels.

True Boiler/Burner/Low NOx Package

- UL/ULC approved package.
- Assures highest fuel-to-steam efficiency.
- Eliminates the need for field installation of burner, controls, or NOx equipment.
- Single point positioning of fuel and air ensures ease of startup and provides reliable operation.

PRODUCT OFFERING

The Low Emission Option currently is available on:

- 125 - 800 hp Model CB Firetube Dryback Boilers.
- High-pressure and low-pressure steam and hot water designs.
- Natural Gas, No. 2 oil, or combination fired.
- Retrofit capability.

Standard Equipment

- Model CB Firetube Boiler.
- New integral front head with internal low NOx system.
- Enhanced burner design.

Available Options

For option details, contact your local Cleaver-Brooks authorized representative.

- Full line of CBLE-4D boiler options.
- Additional NOx reduction packages.

DIMENSIONS AND RATINGS

The Model CBLE-4D dimensions and ratings are provided in the tables and figures below.

Dimensions are for reference only; certified drawings from CB are required if clearances are critical.

Table 1: Model CBLE-4D Steam Boiler Ratings

BOILER HP	50	60	70	80	100	125	150	200	250	300	350	400	500	600	700	800
	RATINGS SEA LEVEL TO 700 FT															
Rated Steam Cap. (lbs/hr from and @ 212 °F)	1725	2070	2415	2760	3450	4313	5175	6900	8625	10350	12075	13800	17250	20700	24150	27600
Btu Output (1000 Btu/hr)	1674	2009	2343	2678	3348	4184	5021	6695	8369	10043	11716	13390	16738	20085	23433	26780
	APPROXIMATE FUEL CONSUMPTION AT RATED CAPACITY															
Light Oil (gph)[A]	14.9	17.9	20.9	23.9	29.9	36.4	43.7	58.3	72.9	87.5	102.1	116.6	145.8	175.0	204.1	233.3
Natural Gas (cfh)[B]	2092	2511	2929	3348	4184	5103	6123	8165	10206	12247	14288	16329	20412	24494	28576	32659
Gas (Therm/hr)	20.9	25.1	29.3	33.5	41.8	51.0	61.2	81.6	102.1	122.5	142.9	163.3	204.1	244.9	285.8	326.6
Propane (cfh)[C]	820	985	1150	1315	1640	2000	2402	3202	4002	4802	5600	6404	8006	9605	11206	12807
	POWER REQUIREMENTS - SEA LEVEL TO 700 FT, 60 HZ															
Blower Motor hp	Refer to Table 15					Refer to Tables 11 and 12										
Oil Pump Motor hp No. 2 Oil	1/3	1/3	1/3	1/3	1/3	1/2	1/2	1/2	1/2	3/4	3/4	3/4	3/4	3/4	1	1
Air Compressor Motor hp (Oil firing Only)	2	2	2	2	2	3	3	3	5	5	5	7-1/2	7-1/2	7-1/2	7-1/2	7-1/2

NOTES:
A. Based on 140,000 Btu/gal
B. Based on 1000 Btu/cu-ft
C. Based on 2550 Btu/cu-ft

Table 2: Model CBLE-4D Hot Water Boiler Ratings

BOILER HP	50	60	70	80	100	125	150	200	250	300	350	400	500	600	700	800
	RATINGS SEA LEVEL TO 700 FT, 60 HZ															
Rated Cap. Btu Output (1000 Btu/hr)	1674	2009	2343	2678	3348	4184	5021	6695	8369	10043	11716	13390	16738	20085	23433	26780
	APPROXIMATE FUEL CONSUMPTION AT RATED CAPACITY															
Light Oil (gph)[A]	14.9	17.9	20.9	23.9	29.9	36.4	43.7	58.3	72.9	87.5	102.1	116.6	145.8	175.0	204.1	233.3
Natural Gas (cfh)[B]	2092	2511	2929	3348	4184	5103	6123	8165	10206	12247	14288	16329	20412	24494	28576	32659
Gas (Therm/hr)	20.9	25.1	29.3	33.5	41.8	51.0	61.2	81.6	102.1	122.5	142.9	163.3	204.1	244.9	285.8	326.6
Propane (cfh)[C]	820	985	1150	1315	1640	2000	2402	3202	4002	4802	5600	6404	8006	9605	11206	12807
	POWER REQUIREMENTS - SEA LEVEL TO 700 FT, 60 HZ															
Blower Motor hp	Refer to Table 15					Refer to Tables 11 and 12										
Oil Pump Motor, hp No. 2 Oil	1/3	1/3	1/3	1/3	1/3	1/2	1/2	1/2	1/2	3/4	3/4	3/4	3/4	3/4	1	1
Air Compressor Motor hp (Oil firing Only)	2	2	2	2	2	3	3	3	5	5	5	7-1/2	7-1/2	7-1/2	7-1/2	7-1/2

NOTES:
A. Based on 140,000 Btu/gal
B. Based on 1000 Btu/cu-ft
C. Based on 2550 Btu/cu-ft

Figure 5. Dimensions CBLE-4D Hot Water - 50-100 HP

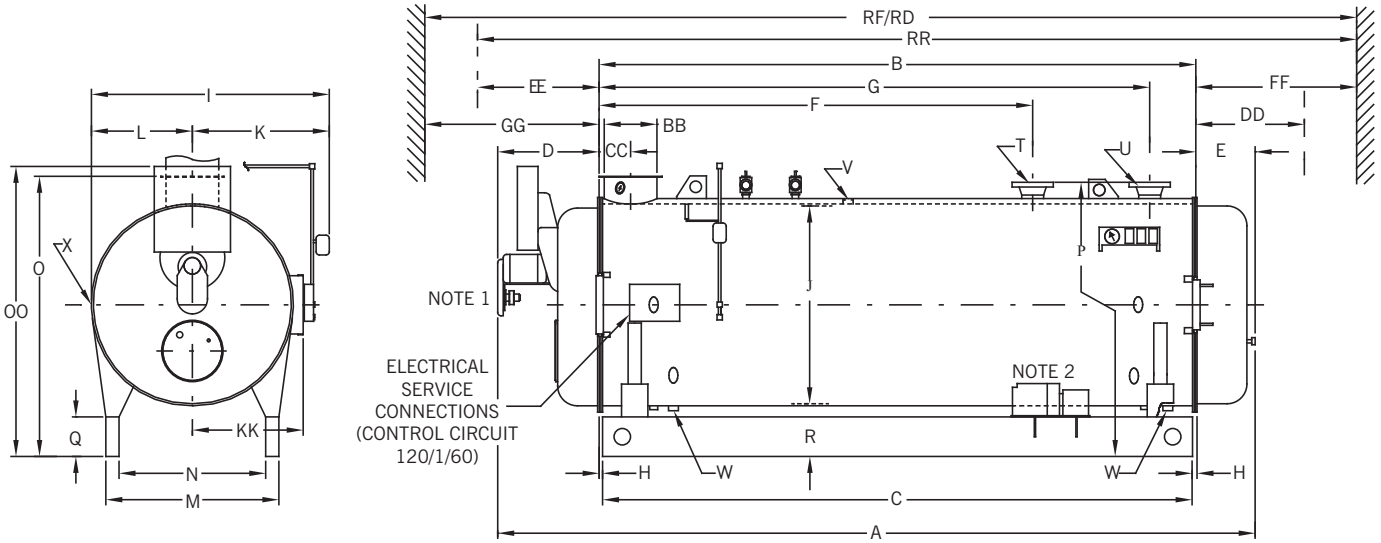

Dimensions in inches unless indicated

Table 7: Dimensions Hot Water 50-100 HP

Description	DIM	Boiler HP				
		50	60	70	80	100
LENGTHS						
Overall	A	129	129	168	168	187
Shell	B	92	92	131	131	150
Base Frame	C	91	91	130	130	148
Front Head Ext.	D	18-1/2	18-1/2	18-1/2	18-1/2	18-1/2
Rear Head Ext.	E	18-1/2	18-1/2	18-1/2	18-1/2	18-1/2
Front Ring Flange to Return	F	69	69	108	108	127
Front Ring Flange to Outlet	G	84-5/8	84-5/8	123-5/8	123-5/8	142-5/8
Ring Flange to Base	H	5/8	5/8	5/8	5/8	1
WIDTHS						
Overall	I	63	63	63	63	63
ID, Boiler	J	48	48	48	48	48
Center to Entrance Box	K	36	36	36	36	36
Center to Outside Hinge	KK	29	29	29	29	29
Center to Lagging	L	27	27	27	27	27
Base, Outside	M	37-5/8	37-5/8	37-5/8	37-5/8	37-5/8
Base, Inside	N	29-5/8	29-5/8	29-5/8	29-5/8	29-5/8
HEIGHT						
Overall	OO	72-5/8	72-5/8	72-5/8	72-5/8	72-5/8
Base to Vent Outlet	O	70	70	70	70	70
Base to Return and outlet	P	70-1/2	70-1/2	70-1/2	70-1/2	70-1/2
Height of Base	Q	12	12	12	12	12
Base to bottom of boiler	R	16	16	16	16	16
BOILER CONNECTIONS						
Water Return[A]	T	4	4	4	4	4
Water Outlet[A] -dip tube included	U	4	4	4	4	4
Air Vent	V	1-1/4	1-1/4	1-1/4	1-1/4	1-1/4
Drain, Front and Rear	W	1-1/4	1-1/4	1-1/2	1-1/2	1-1/2
Auxiliary Connection	X	1	1	1	1	1
VENT STACK						
Diameter (flgd. connection)	BB	10	10	12	12	12
Front Ring Flange to vent C_L	CC	6	6	7	7	7

Table 7: Dimensions Hot Water 50-100 HP (Continued)

Description	DIM	Boiler HP				
		50	60	70	80	100
MINIMUM CLEARANCES						
Rear Door Swing[B]	DD	55	55	55	55	55
Front Door Swing[B]	EE	55	55	55	55	55
Tube Removal, Rear	FF	84	84	123	123	142
Tube, Removal, Front	GG	74	74	113	113	132
MINIMUM BOLER ROOM LENGTH ALLOWING FOR DOOR SWING AND TUBE REMOVAL FROM:						
Rear of Boiler	RR	231	231	309	309	347
Front of Boiler	RF	221	221	299	299	337
Thru Window or Doorway	RD	202	202	241	241	260
WEIGHT IN LBS						
Water Capacity Flooded		3665	3500	5420	5250	5960
Approx. Ship Wgt – 30 psig		6800	7000	8000	8100	8800
Approx. Ship Wgt – 125 psig		7100	7300	8350	8450	9150

NOTES:
1. Air compressor module on sizes 50 thru 100 hp.
2. Add 370 lbs to the 80 hp ship weight for 100A and 485 lbs to the 100 hp ship weight for the 125A.

A. 50 - 100 HP are 150# flange.
B. 50 - 100 HP hinged door standard.

Figure 6. Dimensions CBLE-4D Hot Water - 125-200 HP

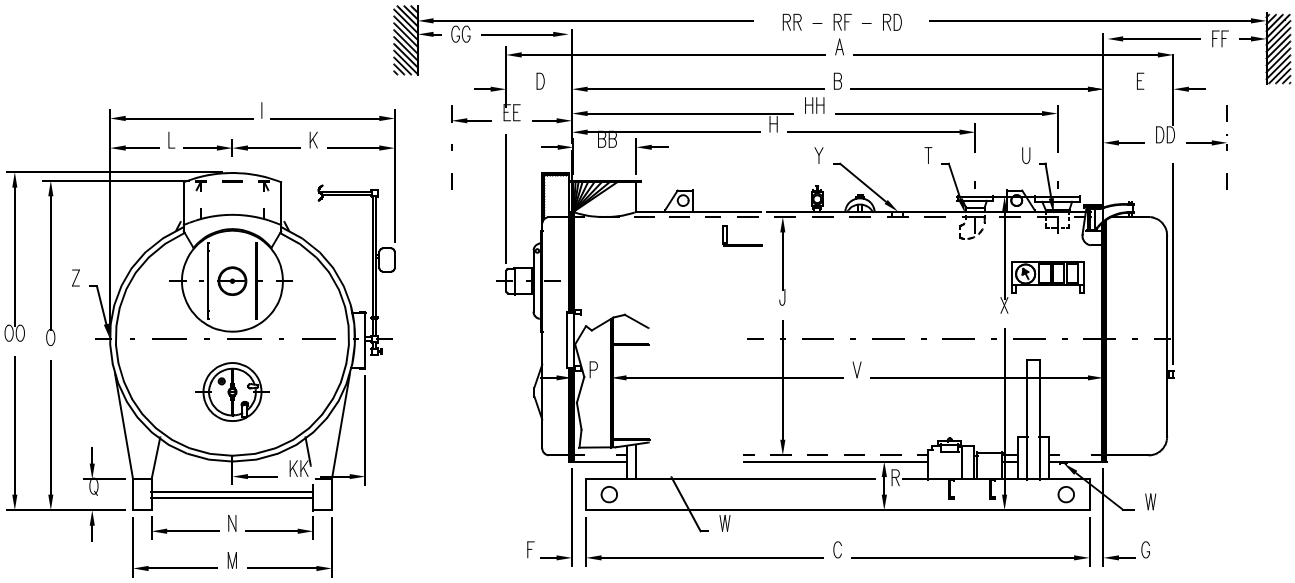

Dimensions in inches unless indicated

Table 8: Dimensions HW 125-200 HP

Description	DIM	Boiler HP		
		125	150	200
LENGTHS				
Overall (60 ppm System)	A	171-1/2	196-1/2	228-1/2
Shell	B	125	149	180
Base Frame	C	112	136	167
Front Head Extension (60 ppm System)	D	27	28	29
Rear Head Extension	E	19-1/2	19-1/2	19-1/2
Front Ring Flange to Outlet	HH	114	136	167
Front Ring Flange to Return	H	89	102	131
Ring Flange to Base	F	1/2	1/2	1/2
Over Tubesheets	V	113	137	168
Shell Extension	P	12	12	12
Rear Flange Ring to Base	G	12-1/2	12-1/2	12-1/2
WIDTHS				
Overall	I	75-1/2	75-1/2	75-1/2
I.D. Boiler	J	60	60	60
Center to Entrance Box	K	42-1/2	42-1/2	42-1/2
Center to Outside Hinge	KK	35	35	35
Center to Lagging	L	33	33	33
Base, Outside	M	52-1/2	52-1/2	52-1/2
Base, Inside	N	44-1/2	44-1/2	44-1/2
HEIGHTS				
Overall	OO	87	87	87
Base to Vent Outlet	O	87	87	87
Base to Return and Outlet	X	82-3/8	82-3/8	82-3/8
Height of Base	Q	12	12	12
Base to Bottom of Boiler	R	16	16	16
BOILER CONNECTION				
Auxiliary Connection	Z	1	1	1
Water Return Flange (ANSI 150# flange)	T	6	6	6
Water Outlet Flange - 2" Dip Tube Included (ANSI 150# flange)	U	6	6	6
Drain, Front and Rear	W	1-1/2	1-1/2	2
Air Vent	Y	1-1/2	1-1/2	1-1/2

Table 8: Dimensions HW 125-200 HP (Continued)

Description	DIM	Boiler HP		
		125	150	200
VENT STACK				
Diameter (flgd. connection)	BB	16	16	16
MINIMUM CLEARANCES				
Rear Door Swing	DD	32	32	32
Front Door Swing	EE	67	67	67
Tube Removal, Rear	FF	115	139	170
Tube, Removal, Front	GG	103	127	158
MINIMUM BOILER ROOM LENGTH ALLOWING FOR DOOR SWING AND TUBE REMOVAL FROM:				
Rear of Boiler	RR	307	355	417
Front of Boiler	RF	260	308	370
Thru Window or Doorway	RD	224	248	279
WEIGHT IN LBS				
Water Capacity Flooded		7670	9295	11130
Approx. Ship. Wgt. – 30 psig		11400	12500	14500

Figure 7. Dimensions CBLE-4D Hot Water 250-350 HP

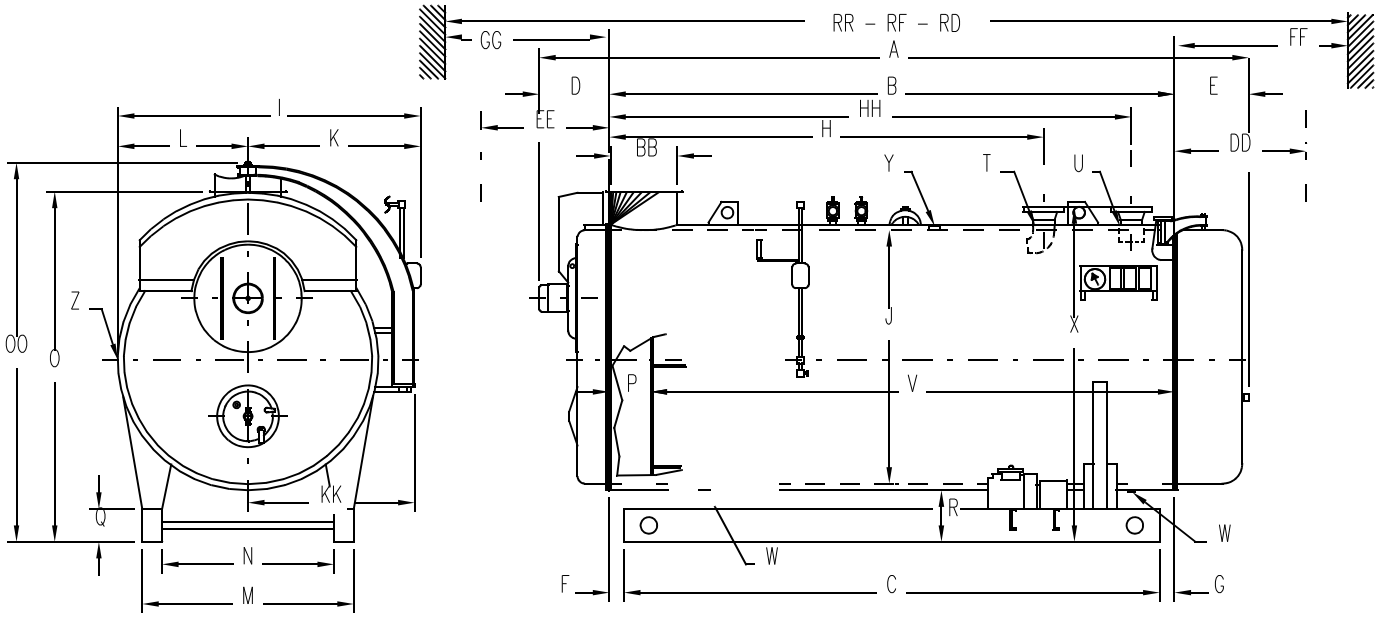

Dimensions in inches unless indicated

Table 9: Dimensions HW 250-350 HP

Description	DIM	Boiler HP		
		250	300	350
LENGTHS				
Overall (60 ppm System)	A	191-1/2	220	252
Shell	B	144	171	201
Base Frame	C	131	158	188
Front Head Extension (60 ppm System)	D	23-1/2	25	27
Rear Head Extension	E	24	24	24
Front Ring Flange to Return	H	103-1/2	130	160
Front Ring Flange to Outlet	HH	131	158	188
Ring Flange to Base	F	1/2	1/2	1/2
Over Tubesheets	V	129	156	186
Shell Extension	P	15	15	15
Rear Flange Ring to Base	G	12-1/2	12-1/2	12-1/2
WIDTHS				
Overall	I	93	93	93
I.D. Boiler	J	78	78	78
Center to Entrance Box	K	51	51	51
Center to Outside Hinge	KK	49	49	49
Center to Lagging	L	42	42	42
Base, Outside	M	64	64	64
Base, Inside	N	52	52	52
HEIGHTS				
Overall	OO	115	115	115
Base to Vent Outlet	O	106	106	106
Base to Return and Outlet	X	101-1/2	101-1/2	101-1/2
Height of Base	Q	10	10	10
Base to Bottom of Boiler	R	17	17	17
BOILER CONNECTION				
Auxiliary Connection	Z	1-1/4	1-1/4	1-1/4

Table 9: Dimensions HW 250-350 HP (Continued)

Description	DIM	Boiler HP		
		250	300	350
Water Return Flange - 2" Dip Tube included (ANSI 150# flange)	T	8	8	8
Water Outlet Flange - 2" Dip Tube Included (ANSI 150# flange)	U	8	8	8
Air Vent	Y	1-1/2	1-1/2	1-1/2
Drain, Front and Rear	W	2	2	2
VENT STACK				
Diameter (flgd. connection)	BB	20	20	20
MINIMUM CLEARANCES				
Rear Door Swing	DD	43	43	43
Front Door Swing	EE	89	89	89
Tube Removal, Rear	FF	131	157	187
Tube, Removal, Front	GG	116	142	172
MINIMUM BOILER ROOM LENGTH ALLOWING FOR DOOR SWING AND TUBE REMOVAL FROM:				
Rear of Boiler	RR	364	417	477
Front of Boiler	RF	303	356	416
Thru Window or Doorway	RD	275	302	332
WEIGHT IN LBS				
Water Capacity Flooded		13880	16840	20090
Approx. Ship. Wgt. – 30 psig		21400	23500	26700

Figure 8. Dimensions CBLE-4D Hot Water 400-800 HP

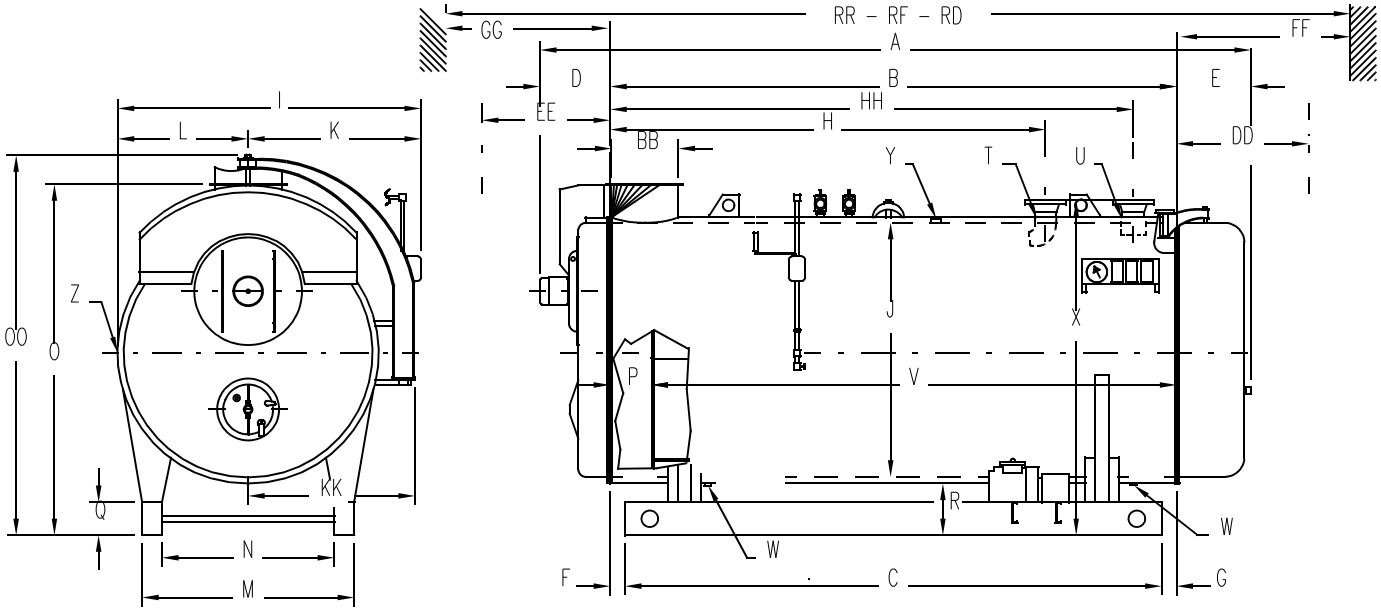

Dimensions in inches unless indicated

Table 10: Dimensions HW 400-800 HP

Description	DIM	Boiler HP				
		400	500	600	700	800
LENGTHS						
Overall (60 ppm System)	A	206	228	262	299	300
Shell	B	147	168	200	233	233
Base Frame	C	134	155	187	220	220
Front Head Extension (60 ppm System)	D	27	28	30	34	35
Rear Head Extension	E	32	32	32	32	32
Shell Ring Flange to Base	F	1/2	1/2	1/2	1/2	1/2
Rear Ring Flange to Base	G	12-1/2	12-1/2	12-1/2	12-1/2	12-1/2
Shell Flange to Outlet	HH	139-1/2	156-1/2	182-1/2	216-1/2	216-1/2
Shell Flange to Return	H	107	125	151-1/2	185	185
Over Tubesheets	V	130	151	183	216	216
Shell Extension	P	17	17	17	17	17
WIDTHS						
Overall	I	113	113	113	113	115
I.D. Boiler	J	96	96	96	96	96
Center to Entrance Box	K	62	62	62	62	64
Center to Outside Hinge	KK	59	59	59	59	59
Center to Lagging	L	51	51	51	51	51
Base, Outside	M	72	72	72	72	72
Base, Inside	N	56	56	56	56	56
HEIGHTS						
Overall	OO	134	134	134	134	134
Base to Vent Outlet	O	126	126	126	126	126
Height of Base	Q	12	12	12	12	12
Base to Bottom of Boiler	R	19	19	19	19	19
Base to Return and Outlet	X	121-9/16	121-9/16	121-9/16	121-9/16	121-9/16
BOILER CONNECTIONS						
Auxiliary Connection	Z	1-1/4	1-1/4	1-1/4	1-1/4	1-1/4
Drain, Front and Rear	W	2	2	2	2	2
Water Return (ANSI 150# flange)	T	10	10	12	12	12
Water Outlet - 2” Dip Tube Included (ANSI 150# flange)	U	10	10	12	12	12

Table 10: Dimensions HW 400-800 HP (Continued)

Description	DIM	Boiler HP				
		400	500	600	700	800
Air Vent	Y	2	2	2	2	2
VENT STACK						
Diameter (Flanged Connection)	BB	24	24	24	24	24
MINIMUM CLEARANCES						
Rear Door Swing	DD	53	53	53	53	53
Front Door Swing	EE	108	108	108	108	108
Tube Removal, Rear	FF	131	152	184	217	217
Tube Removal, Front	GG	114	135	167	200	200
MINIMUM BOILER ROOM LENGTH ALLOWING FOR DOOR SWING AND TUBE REMOVAL FROM:						
Rear of Boiler	RR	386	428	492	558	558
Front of Boiler	RF	314	356	420	486	486
Thru Window or Doorway	RD	308	329	361	394	394
WEIGHT IN LBS						
Normal Water Capacity		20015	23300	28260	33360	33360
Approx. Ship. Wgt. – 30 psig		33300	36900	42150	49650	49750

NOTES: All connections are threaded unless indicated:

Table 11: Blower Motors 125-800 HP - operating pressures 125 psig and less, and all hot water boilers

BOILER HP	MOTOR HP		
	60 PPM	30 PPM	20 PPM
125	5	10	10
150	7.5	10	10
200	15	15	NA
250	7.5	10	15
300	10	15	30
350	15	25	40
400	10	15	20
500	15	20	30
600	25	25	60
700	30	60	75
800	50	75	NA

NOTES: For elevations above 700' - contact your local Cleaver-Brooks authorized representative.

Table 12: Blower Motors 125-800 HP - operating pressures greater than 125 psig (steam boilers)

BOILER HP	MOTOR HP		
	60 PPM	30 PPM	20 PPM
125	5	10	10
150	10	10	15
200	15	20	NA
250	7.5	15	20
300	10	20	40
350	20	25	50
400	10	15	25
500	20	25	40
600	25	40	60
700	40	60	NA
800	60	75[A]	NA

NOTES: For elevation above 700' - contact your local Cleaver-Brooks authorized representative.
A. Downrate to 770 hp.

Table 13: Blower Motors NTI Boilers

Boiler Size	*125 psig and less & all HW*			*>125 psig*		
	15 ppm Blower Motor HP	9 ppm Blower Motor HP	7 ppm Blower Motor HP	15 ppm Blower Motor HP	9 ppm Blower Motor HP	7 ppm Blower Motor HP
125	7.5	7.5	7.5	7.5	7.5	7.5
150	7.5	10	10	7.5	10	10
200	15	20	20	NA	25	25
250	10	10	NA	10	15	NA
300	20	20	NA	25	NA	NA
350	20	25	NA	NA	30	NA
400	20	20	NA	25	25	NA
500	25	30	NA	25	30	NA
600	40	50	NA	50	60	NA
700	60	75	NA	75	75	NA
800*	75	75	NA	NA	NA	NA

*800 HP to be derated to 720 HP for 9 ppm and 750 HP for 15 ppm

Table 14: Blower Motors LNO Boilers

Boiler Size	*125 psig and less & all HW*	*>125 psig*
250	20	20
300	30	40
350	40	40
400	40	40
500	50	50
600	75	75

Table 15: Blower Motors 50-100 HP

BOILER SIZE	UC	60 ppm	30 ppm	
			NOTE A	NOTE B
50	2	2	2	3
60	2	2	3	5
70	2	3	5	-
80	2	3	-	-
100	3	3	5	5

A. ≤125# ST and all HW
B. >125# ST

Table 16: Turndown for CBLE-4D 60 ppm & 30 ppm - Natural Gas & #2 Oil

NOx System based on Natural Gas	60 PPM NOx System		30 PPM NOx System	
Boiler HP	Natural Gas	#2 Oil	Natural Gas	#2 Oil
100	4:1	4:1	4:1	4:1
125	4:1	4:1	4:1	4:1
150	4:1	4:1	4:1	4:1
200	4:1	4:1	4:1	4:1
250	10:1	8:1	8:1	8:1
300	10:1	8:1	10:1	8:1
350	10:1	8:1	10:1	8:1
400	10:1	8:1	10:1	8:1
500	10:1	8:1	10:1	8:1
600	10:1	8:1	10:1	8:1
700	10:1	8:1	10:1	8:1
750	10:1	8:1	10:1	8:1
800	10:1	8:1	10:1	8:1

Table 17: Turndown Guarantee for CBLE-4D NTI Boilers - Natural Gas & #2 Oil

Boiler Size	Turndown	
	9 ppm	15 ppm
125	4:1	4:1
150	4:1	5:1
200	4:1	5:1
250	5:1	5:1
300	5:1	5:1
350	5:1	5:1
400	5:1	6:1
500	5:1	6:1
600	6:1	6:1
700	7:1	7:1
800*	7:1	7:1

*800 HP to be derated to 720 HP for 9 ppm and 750 HP for 15 ppm

Table 18: Steam Boiler Safety Valve Openings

VALVE SETTING	15 PSIG STEAM		100 PSIG STEAM		125 PSIG STEAM		150 PSIG STEAM		200 PSIG STEAM		250 PSIG STEAM		300 PSIG STEAM	
BOILER HP	VALVES REQ'D	OUTLET SIZE (IN.)	VALVES REQ'D	OUTLET SIZE (IN.)	VALVES REQ'D	OUTLET SIZE (IN.)	VALVES-REQ'D	OUTLET SIZE (IN.)	VALVES REQ'D	OUTLET SIZE (IN.)	VALVES REQ'D	OUTLET SIZE (IN.)	VALVES REQ'D	OUTLET SIZE (IN.)
50	1	2-1/2	1	1-1/2	1	1-1/4	1	1-1/4	1	1	1	1	-	-
60	1	2	1	1-1/2	1	1-1/4	1	1-1/4	1	1	1	1	-	-
70	1	2	1	2	1	1-1/2	1	1-1/2	1	1-1/4	1	1	-	-
80	1	2-1/2	1	2	1	1-1/2	1	1-1/2	1	1-1/4	1	1-1/4	-	-
100	1	2-1/2	1	2	1	1-1/2	1	1-1/2	1	1-1/2	1	1-1/4	-	-
125	1	2-1/2	2	(1) 1-1/2 (1) 1-1/4	2	(1) 1-1/2 (1) 1-1/4	2	(1) 1-1/2 (1) 1-1/4	2	(1) 1-1/4 (1) 1	2	1	2	1
150	1	3	2	1-1/2	2	(1) 1-1/2 (1) 1-1/4	2	(1) 1-1/2 (1) 1-1/4	2	(1) 1-1/4 (1) 1	2	1	2	1
200	1	3	2	2	2	1-1/2	2	1-1/2	2	(1) 1-1/2 (1) 1-1/4	2	1-1/4	2	(1) 1 (1) 1-1/4
250	2	2-1/2	2	2	2	(1)2 (1)1-1/2	2	(1) 2 (1) 1-1/2	2	(1) 1-1/2 (1) 1-1/4	2	(1) 1-1/2 (1) 1-1/4	2	1-1/4
300	2	(1) 2-1/2 (1) 3	2	(1) 2-1/2 (1) 2	2	2	2	(1) 2 (1) 1-1/2	2	1-1/2	2	(1)1-1/2 (1)1-1/4	2	(1) 1-1/2 (1) 1-1/4
350	2	3	2	2-1/2	2	(1)2-1/2 (1)2	2	2	2	(1) 2 (1) 1-1/2	2	1-1/2	2	(1) 1-1/2 (1) 1-1/4
400	2	3	2	2-1/2	2	(1)2-1/2 (1)2	2	(1) 2-1/2 (1) 2	2	(1) 2 (1) 1-1/2	2	(1) 2 (1) 1-1/2	2	1-1/2
500	3	(2) 3 (1) 2-1/2	3	(2) 2-1/2 (1) 2	2	2-1/2	2	(1) 2-1/2 (1) 2	2	(1) 2 (1) 2-1/2	2	(1) 2 (1)1-1/2	2	(1) 1-1/2 (1) 2
600	3	3	3	2-1/2	3	(2) 2-1/2 (1) 2	2	2-1/2	2	(1) 2 (1) 2-1/2	2	2	2	2
700	4	(3) 3 (1) 2-1/2	4	(3) 2-1/2 (1) 2	3	2-1/2	3	(2) 2-1/2 (1) 2	2	2-1/2	2	(1) 2-1/2 (1) 2	2	2
800	4	3	4	2-1/2	4	(3) 2-1/2 (1) 2	3	(2) 2-1/2 (1) 2	2	2-1/2	2	(1) 2-1/2 (1) 2	2	(1) 2 (1) 2-1/2

NOTES: Valve manufacturers are Kunkle, Consolidated or Conbraco, depending on availability.

Table 19: Hot Water Boiler Relief Valve Openings 50-100 HP

VALVE SETTING	30 PSIG HW		60 PSIG HW		100 PSIG HW		125 PSIG HW	
BOILER HP	NO. OF VALVES REQ'D	OUTLET SIZE (IN.)	NO. OF VALVES REQ'D	OUTLET SIZE (IN.)	NO. OF VALVES REQ'D	OUTLET SIZE (IN.)	NO. OF VALVES REQ'D	OUTLET SIZE (IN.)
50	1	2	1	1-1/4	1	1	1	1
60	1	2	1	1-1/4	1	1	1	1
70	1	2	1	2	1	1-1/4	1	1
80	1	2	1	2	1	1-1/4	1	1
100	1	2-1/2	1	2	1	1-1/4	1	1

NOTES:
1.Hot water relief valves are Kunkle #537.
2. BHP followed by "A" designates hot water boilers furnished in a smaller vessel size with additional tubes in the upper portion of the vessel.

Table 20: Hot Water Boiler Relief Valve Openings 125-800 HP

VALVE SETTING	30 PSIG HW		125 PSIG HW		150 PSIG HTHW	
BOILER HP	NO. OF VALVES REQ'D	OUTLET SIZE (IN.)	NO. OF VALVES REQ'D	OUTLET SIZE (IN.)	NO. OF VALVES REQ'D	OUTLET SIZE (IN.)
125	1	2-1/2	1	1-1/4	2	(1) 1-1/2 (1) 2
150	1	2-1/2	1	1-1/4	2	(1) 1-1/2 (1) 2
200	2	2	1	2	2	2
250	2	(1) 1-1/2 (1) 2-1/2	1	2	2	(1) 2 (1) 2-1/2
300	2	(1) 2 (1) 2-1/2	1	2	2	2-1/2
350	2	2-1/2	1	2-1/2	2	(1) 2-1/2 (1) 3
400	3	(2) 2 (1) 2-1/2	1	2-1/2	2	(1) 2-1/2 (1) 3
500	3	(1) 2 (2) 2-1/2	1	2-1/2	2	3
600	3	2-1/2	2	(1) 1 (1) 2-1/2	3	(2) 3 (1) 2-1/2
700	4	(1) 2 (3) 2-1/2	2	(1) 1 (1) 2-1/2	3	3
800	4	2-1/2	2	(1) 2 (1) 2-1/2	3	3

NOTES: Hot water relief valves are Kunkle #537 for 30 psi and 125 psi HW; #927 for HTHW

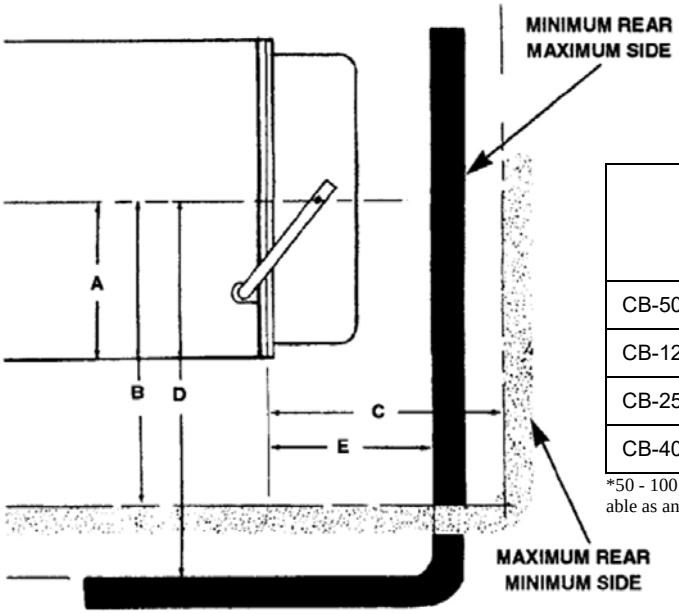

BOILER HP	DIMENSIONS (INCHES)				
	A	B	C	D	E
CB-50 THRU CB-100*	27	48	38	60	26
CB-125 THRU CB-200	33	55	45	68	32
CB-250 THRU CB-350	42	69	58	86	43
CB-400 THRU CB-800	51	88	71	109	53

*50 - 100 hp (100A & 125A) boilers are standardly equipped with hinges. Davit available as an option.

Figure 9. Space required to open rear head on CBLE-4D boilers equipped with davits

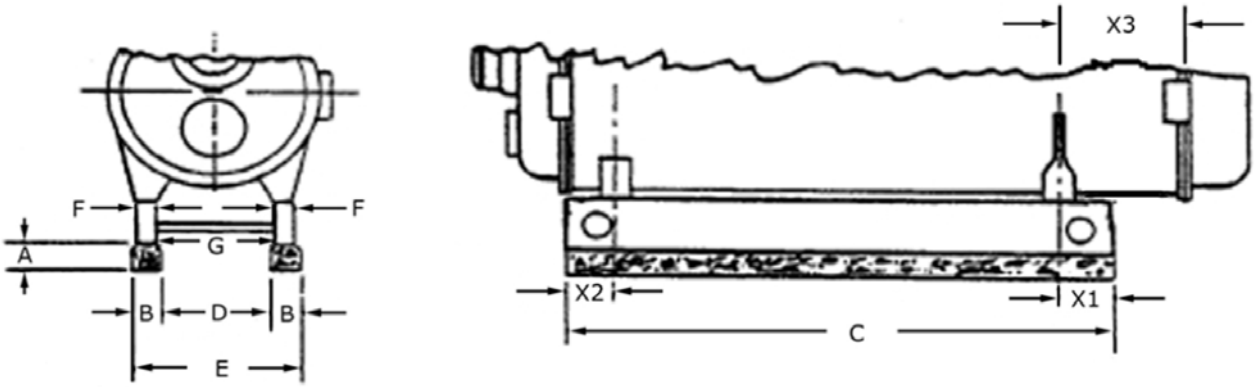

BOILER HP	A	B	C	D	E	F	G	X1	X2	X3
50-60	6	8	91	26	42	4	29-5/8	8-1/4	8-1/4	8-1/4
70-80	6	8	130	26	42	4	29-5/8	8-1/4	8-1/4	8-1/4
100	6	8	148	26	42	4	29-5/8	8-1/4	8-1/4	8-1/4
125	6	9	112	39-1/2	57-1/2	4	44-1/2	10	9-3/4	22-1/2
150	6	9	136	39-1/2	57-1/2	4	44-1/2	10	9-3/4	22-1/2
200	6	9	167	39-1/2	57-1/2	4	44-1/2	10	9-3/4	22-1/2
250	6	12	131	46	70	4	56	10	22	22-1/2
300	6	12	158	46	70	4	56	10	22	22-1/2
350	6	12	188	46	70	4	56	10	22	22-1/2

NOTE:

All numbers in table are in inches.
6-inch high mounting piers recommended for use beneath the boiler base frame. The use of these piers provides increased inspection accessibility to the piping beneath the boiler and added height for washing down the area beneath the boiler.

Figure 10. Model CBLE-4D Boiler Mounting Piers (50-350 HP)

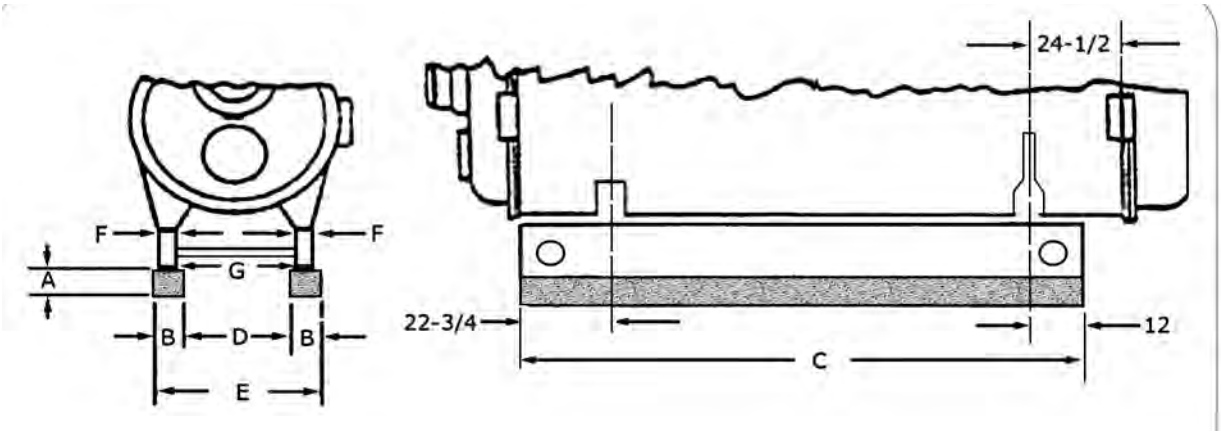

BOILER HP	A	B	C	D	E	F	G
400	6	14	134	50	78	6-1/2	58-7/8
500	6	14	155	50	78	6-1/2	58-7/8
600	6	14	187	50	78	6-1/2	58-7/8
700-800	6	14	220	50	78	6-1/2	58-7/8

NOTE:
1. All numbers in table are in inches.
2. 6-inch high mounting piers recommended for use beneath the boiler base frame. The use of these piers provides increased inspection accessibility to the piping beneath the boiler and added height for washing down the area beneath the boiler.

Figure 11. Model CBLE-4D Boiler Mounting Piers (400-800 HP)

CBLE-4D 250-350HP

Motor HP	Hole Number
7.5	1
15	1
25	2
40	3

CBLE-4D 400-800HP

Motor HP	Hole Number
10	1
20	1
30	2
50	2
75	3

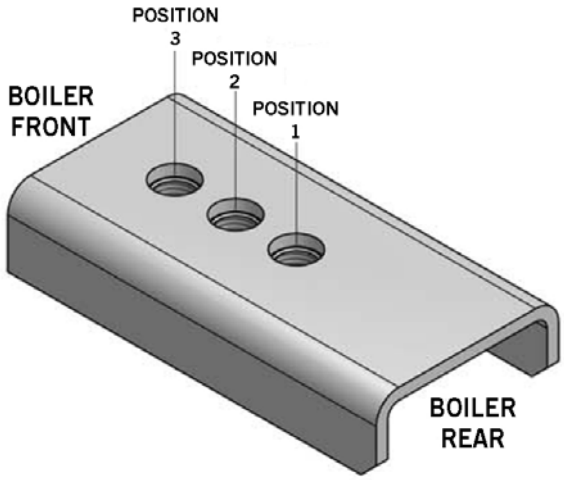

Figure 12. Front Davit Support

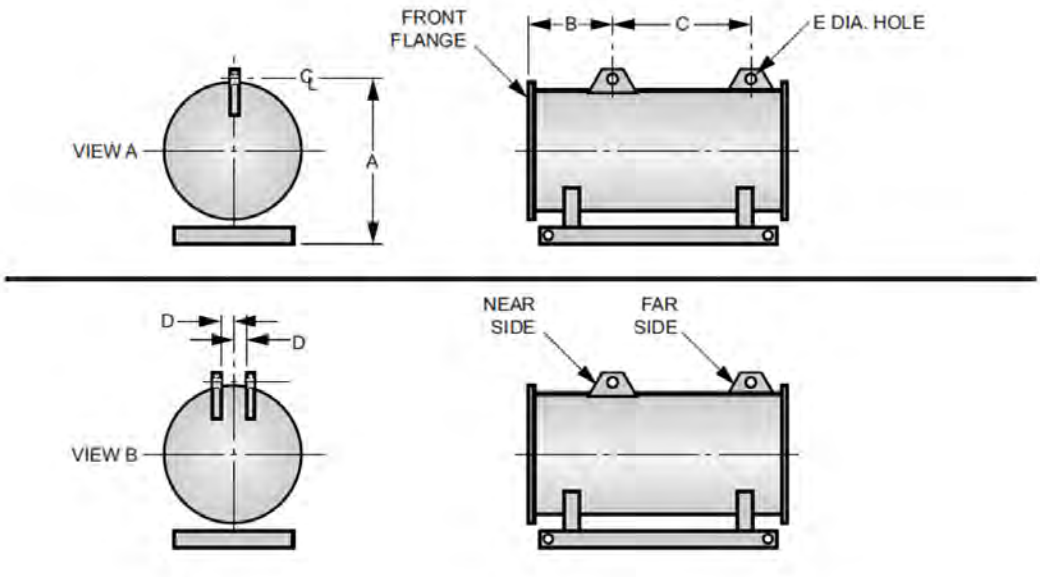

BOILER HP	TYPE	ALL DIMENSIONS IN INCHES				
		A	B	C	D	E
50 & 60	All	68	18	57	10	2-1/2
70 & 80	All	68	27	67	10	2-1/2
100	All	68	27	86	10	2-1/2
125	All	80-1/4	29-3/4	70-1/2	10	3
150	All	80-1/4	29-3/4	83-1/2	10	3
200	All	80-1/4	29-3/4	114-1/2	10	3
250	Steam	99	36	72	10	3
	Hot Water	99	36	81	10	3
300	Steam	99	36	99	10	3
	Hot Water	99	36	108	10	3
350	Steam	99	36	129	10	3
	Hot Water	99	36	138	10	3
400	All	119	35-3/4	78	11	3
500	All	119	35-3/4	99	11	3
600	All	119	35-3/4	131	11	3
700 & 800	All	119	35-3/4	164	11	3

NOTE: A, B and C dimensions may vary by 1/2 inch.

Figure 13. Lifting Lug Location, Model CBLE-4D Boilers

PERFORMANCE DATA

The LE option provides NOx reduction at current published and predicted fuel-to-steam efficiencies.

Specifying Boiler Efficiency

Cleaver-Brooks offers an industry leading fuel-to-steam boiler efficiency guarantee for Model CBLE-4D Firetube Boilers. The guarantee is based on the fuel-to-steam efficiencies shown in the efficiency tables and the following conditions. The efficiency percent number is only meaningful if the specific conditions of the efficiency calculations are clearly stated in the specification.

When specifying the efficiencies in the tables, be sure to include the specific guarantee conditions to maximize the effectiveness of your efficiency specification. If you have any questions regarding the efficiency specifications, please contact your local Cleaver-Brooks authorized representative.

Efficiency Specification

The boiler manufacturer shall guarantee that, at the time of startup, the boiler will achieve fuel-to-steam efficiency (see Tables 21 and 22) at 100% firing rate (add efficiency guarantees at 25%, 50%, and 75% of rating, if required). If the boiler(s) fail to achieve the corresponding guaranteed efficiency as published, the boiler manufacturer will rebate, to the ultimate boiler owner, ten thousand dollars ($10,000) for every full efficiency point (1.0%) that the actual efficiency is below the guaranteed level.

The specified boiler efficiency is based on the following conditions.

1. Fuel specification used to determine boiler efficiency:

Natural Gas	No. 2 Oil	No. 6 Oil
Carbon,% (wt) = 69.98 Hydrogen,% (wt) = 22.31 Sulfur,% (wt) = 0.0 Heating value, Btu/lb. = 21,830	Carbon,% (wt) = 85.8 Hydrogen,% (wt) = 12.7 Sulfur,% (wt) = 0.2 Heating value, Btu/lb. = 19,420	Carbon,% (wt) = 86.6 Hydrogen,% (wt) = 10.9 Sulfur,% (wt) = 2.09 Heating value, Btu/lb. = 18,830

2. Efficiencies are based on ambient air temperature of 80 °F, relative humidity of 30%, and 15% excess air in the exhaust flue gas.
3. Efficiencies are based on manufacturer's published radiation and convection losses. (For Cleaver-Brooks radiation and convection losses, see Boiler Efficiency Facts Guide, publication number CB-7767).
4. Any efficiency verification testing will be based on the stack loss method.

For efficiencies and stack temperatures at operating pressures not listed, follow these procedures:

When the operating steam pressure is between 10 psig and 125 psig, interpolate the values from the efficiency tables.

When the operating steam pressure is above 125 psig, estimated efficiency can be calculated as follows:

Example:

Boiler: 350 hp.
Fuel: natural gas.
Operating steam pressure: 200 psig.

Find the fuel-to-steam efficiency at 100% firing rate. From Table 21 for a 350 hp boiler operating at 100% firing rate and an operating steam pressure of 125 psig, the efficiency is 82.5%.

Using Figure 14, note that the stack temperature increases 36 °F at the higher operating pressure. To estimate boiler efficiency, use this rule of thumb: For every 40 °F increase in stack temperature, efficiency decreases by 1%. Since the stack temperature rise is 36 °F, the decrease in the boiler efficiency at 200 psig operating pressure is calculated as follows: 36/40 =.9%. Therefore, the boiler efficiency at 200 psig operating pressure is 82.5 -.9 = 81.6%

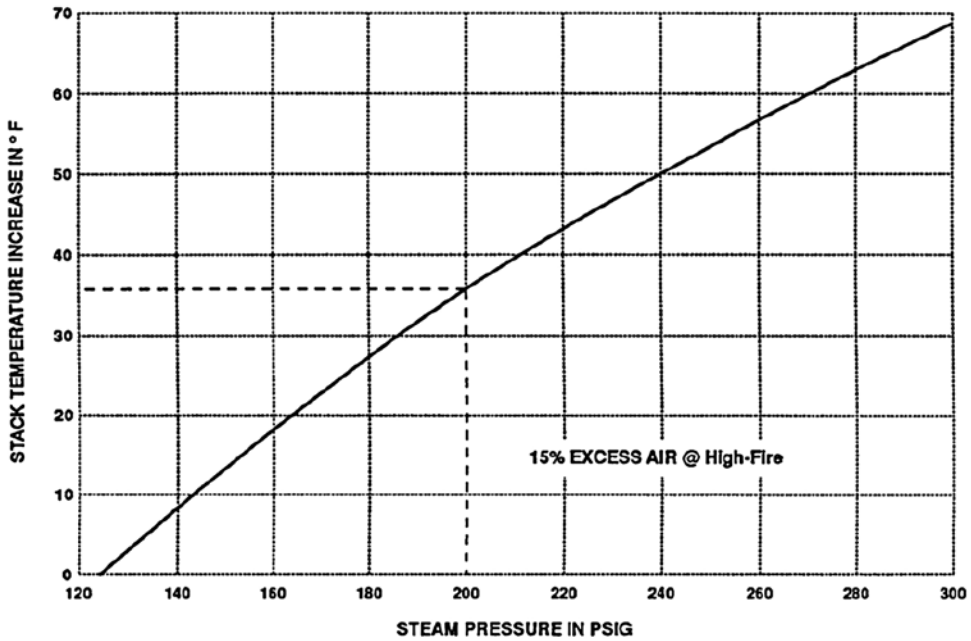

Figure 14. Predicted stack temperature increase for pressure > 125 psig

Table 23: CBLE-4D Boilers - Natural Gas, Emission Levels

POLLUTANT		ESTIMATED LEVEL				
		60 ppm	**30 ppm**	**20 ppm**	**15 ppm**	**9 ppm**
CO	ppm[A] lb./MMBtu	50/150[B] 0.04/0.11	50/150[B] 0.04/0.11	50/150[B] 0.04/0.11	50 0.04	50 0.04
NOx	ppm[A] lb/MMBtu	60 0.07	30 0.035	20 0.024	15 0.018	9 0.011
SOx	ppm[A] lb/MMBtu	1 0.001	1 0.001	1 0.001	1 0.001	1 0.001
HC/VOC	ppm[A] lb/MMBtu	10 0.004	10 0.004	10 0.004	10 0.004	10 0.004
PM	ppm[A] lb/MMBtu	- 0.01	- 0.01	- 0.01	- 0.01	- 0.01

A. ppm levels are given on a dry volume basis and corrected to 3% oxygen (15% excess air).
B. CO emission for 60, 30, 25 & 20 ppm system is 50 ppm (0.04 lb/MMBtu) when boiler is operating above 50% of rated capacity. CO emission is 150 ppm (0.11 lb/MMBtu) when boiler is operating below 50% of rated capacity.

Table 24: CBLE-4D Boilers - No. 2 Oil, Emission Levels

POLLUTANT		ESTIMATED LEVEL			
		60 ppm LE Option	**30, 20 ppm LE Option**	**15 ppm**	**9 ppm**
CO	ppm[A] lb/MMBtu	50 0.039	50 0.039	50 0.039	50 0.039
NOx	ppm[A] lb/MMBtu	140 0.186	90 0.120	85 0.113	70 0.093
SOx	ppm[A] lb/MMBtu	278 0.52	278 0.52	278 0.52	278 0.52
HC/VOC	ppm[A] lb/MMBtu	4 0.002	4 0.002	4 0.002	4 0.002
PM	ppm[A] lb/MMBtu	- 0.025	- 0.025	- 0.025	- 0.025

A. ppm levels are given on a dry volume basis and corrected to 3% oxygen (15% excess air).
BASED ON THE FOLLOWING CONSTITUENT LEVELS:
Fuel-bound Nitrogen content = 0.015% by weight.
Sulfur content = 0.5% by weight.
Ash content = 0.01% by weight.

ENGINEERING DATA

Sound Level

Table 25 gives a summary of predicted sound pressure levels for Model CB boilers with 30 ppm LE Options. Contact your local Cleaver-Brooks authorized representative for sound levels or other LE Options.

Units - The units for the sound level tables are dbA (decibels, measured on the A-weighted scale) in reference to 0.0002 microbars (20 micro-Newtons per square meter). Their reference are standardly used in specifying and reporting sound pressure levels on industrial equipment.

Test Method - The sound pressure levels in the above tables were obtained from tests in accordance with the "ABMA Test Code for the Measurement of Sound from Packaged Boilers". In accordance with this code the sound pressure levels reported were measured on the boiler centerline 4-1/2 feet vertically above the bottom of the base rails and 3 feet horizontally in front of the end of the blower motor or front surface of the electrical cabinet.

Sound Level Meter - The sound level meter used complies with ANSI S1.4, Type 1 (Precision). The readings are taken with the meter set for slow response and corrected for background levels.

Sound Pressure - The large size boilers, the need for auxiliary equipment, and the necessary interconnecting piping make it impractical (and sometimes impossible) to provide a boiler testing environment which is suitable for taking the data needed to develop Sound Pressure Power levels.

Typical Values - Sound pressure levels (dbA) for the same boiler will vary between boiler rooms. Sound levels will vary with motor type, NOx levels, and altitudes. In addition, variations will occur between different people using different sound meters on the same boiler. And finally, no two boilers can be expected to give precisely the same sound levels. For these reasons, we can only predict, but not guarantee, sound levels (dbA).

Table 25: CBLE-4D Predicted Sound Levels

BOILER HP	50	60	70	80	100	125	150	200	250	300	350	400	500	600	700	800
HFO, dbA	79	79	79	79	81	84	84	84	83	84	85	84	85	85	88	90
LFO, dbA	78	78	78	78	79	82	82	83	81	82	83	82	83	83	84	89
HFG, dbA	77	77	78	78	78	82	82	83	82	83	84	83	83	85	87	90
LFG, dbA	72	73	74	75	75	81	81	82	81	82	83	81	81	82	84	88

NOTES
1. Sound pressure levels in dbA
2. Based on standard altitude fans and fan motors, 60 Hz.
3. 50-100 HP based on uncontrolled NOx. 125-800 HP based on 30ppm.
4. Contact your local Cleaver-Brooks authorized representative for sound levels of 60 or 20 ppm LE options.

ABBREVIATIONS:
HF = High Fire
LF = Low Fire
O = Oil
G = Gas

Table 26: Gas Pressure Requirements 50-100 HP

Boiler Hp	Train Size	Gas Supply Pressure Less Then 27" W.C.		Gas Supply Pressure Up To 10 Psi	
		Regulator Model*	Pressure range	Regulator Model*	Pressure range
50	2	RV-91	0.3 - 1.0 psi	210-E	0.3 - 10 psi
60	2	RV-91	0.4 - 1.0 psi	210-E	0.4 - 10 psi
70	2	RV-91	0.5 - 1.0 psi	210-E	0.5 - 10 psi
80	2	RV-91	CONTACT CB	210-E	CONTACT CB
100	2	RV-91		210-E	
*Maxitrol RV series is standard; 210 series is optional					

Table 27: Gas Pressure Requirements 125-800 HP

BOILER HP	GAS TRAIN SIZE	GAS PRESSURE RANGE					
		09 ppm	15 ppm	20 ppm	30 ppm	60 ppm	UC
125 HP	1.5 in	3.3 - 4.9 psi	3.3 - 4.9 psi	0.8 - 6.9 psi	0.7 - 7.4 psi	0.7 - 7.6 psi	0.7 - 8.6 psi
125 HP	2.0 in	3.1 - 3.3 psi	3.1 - 3.3 psi	0.6 - 0.8 psi	0.6 - 0.7 psi	0.5 - 0.7 psi	0.5 - 0.7 psi
125 HP	2.5 in	3.0 - 3.1 psi	3.0 - 3.1 psi	0.4 - 0.6 psi	0.4 - 0.6 psi	0.4 - 0.5 psi	0.4 - 0.5 psi
125 HP	3.0 in	2.9 - 3.0 psi	2.9 - 3.0 psi	0.4 - 0.4 psi	0.4 - 0.4 psi	0.4 - 0.4 psi	0.3 - 0.4 psi
125 HP	4.0 in	2.9 - 2.9 psi	2.9 - 2.9 psi	0.4 - 0.4 psi	0.3 - 0.4 psi	0.3 - 0.4 psi	0.3 - 0.3 psi
150 HP	1.5 in	3.7 - 5.5 psi	3.9 - 5.8 psi	1.0 - 4.7 psi	0.9 - 8.7 psi	0.9 - 8.7 psi	0.9 - 8.7 psi
150 HP	2.0 in	3.4 - 3.7 psi	3.6 - 3.9 psi	0.7 - 1.0 psi	0.6 - 0.9 psi	0.6 - 0.9 psi	0.6 - 0.9 psi
150 HP	2.5 in	3.2 - 3.4 psi	3.4 - 3.6 psi	0.5 - 0.7 psi	0.4 - 0.6 psi	0.4 - 0.6 psi	0.4 - 0.6 psi
150 HP	3.0 in	3.2 - 3.2 psi	3.4 - 3.4 psi	0.4 - 0.5 psi	0.4 - 0.4 psi	0.4 - 0.4 psi	0.3 - 0.4 psi
150 HP	4.0 in	3.1 - 3.2 psi	3.3 - 3.4 psi	0.4 - 0.4 psi	0.3 - 0.4 psi	0.3 - 0.4 psi	0.3 - 0.3 psi
200 HP	1.5 in	4.6 - 6.9 psi	5.0 - 7.5 psi		1.6 - 8.7 psi	1.5 - 8.7 psi	1.5 - 8.7 psi
200 HP	2.0 in	4.1 - 4.6 psi	4.5 - 5.0 psi		1.0 - 1.6 psi	1.0 - 1.5 psi	1.0 - 1.5 psi
200 HP	2.5 in	3.8 - 4.1 psi	4.2 - 4.5 psi		0.7 - 1.0 psi	0.7 - 1.0 psi	0.6 - 1.0 psi
200 HP	3.0 in	3.6 - 3.8 psi	4.0 - 4.2 psi		0.6 - 0.7 psi	0.5 - 0.7 psi	0.5 - 0.6 psi
200 HP	4.0 in	3.6 - 3.6 psi	4.0 - 4.0 psi		0.5 - 0.6 psi	0.5 - 0.5 psi	0.4 - 0.5 psi
250 HP	1.5 in	4.1 - 6.2 psi	4.4 - 6.7 psi	2.4 - 5.0 psi	2.4 - 2.7 psi	2.4 - 2.6 psi	2.3 - 2.6 psi
250 HP	2.0 in	3.3 - 3.8 psi	3.7 - 4.1 psi	1.6 - 2.4 psi	1.6 - 2.4 psi	1.6 - 2.4 psi	1.5 - 2.3 psi
250 HP	2.5 in	2.9 - 3.3 psi	3.2 - 3.7 psi	1.1 - 1.6 psi	1.1 - 1.6 psi	1.1 - 1.6 psi	1.0 - 1.5 psi
250 HP	3.0 in	2.7 - 2.9 psi	3.1 - 3.2 psi	0.9 - 1.1 psi	0.9 - 1.1 psi	0.9 - 1.1 psi	0.9 - 1.0 psi
250 HP	4.0 in	2.6 - 2.7 psi	2.9 - 3.1 psi	0.8 - 0.9 psi	0.8 - 0.9 psi	0.8 - 0.9 psi	0.8 - 0.9 psi
300 HP	1.5 in - 2.0 in	5.5 - 8.3 psi	5.7 - 8.5 psi	3.0 - 8.7 psi	3.0 - 3.6 psi	3.0 - 3.5 psi	3.0 - 3.5 psi
300 HP	2.0 in	4.6 - 5.5 psi	4.7 - 5.7 psi	2.1 - 3.0 psi	2.1 - 3.0 psi	2.0 - 3.0 psi	2.0 - 3.0 psi
300 HP	3.0 in	3.9 - 4.6 psi	4.0 - 4.7 psi	1.3 - 2.1 psi	1.3 - 2.1 psi	1.2 - 2.0 psi	1.2 - 2.0 psi
300 HP	4.0 in	3.7 - 3.9 psi	3.9 - 4.0 psi	1.1 - 1.3 psi	1.1 - 1.3 psi	1.0 - 1.2 psi	1.0 - 1.2 psi
350 HP	1.5 in - 2.0 in	6.4 - 9.5 psi	6.2 - 9.3 psi	4.2 - 6.3 psi	4.2 - 6.3 psi	4.1 - 6.2 psi	4.1 - 6.1 psi
350 HP	2.0 in	5.4 - 6.4 psi	5.3 - 6.2 psi	3.2 - 4.2 psi	3.2 - 4.2 psi	3.2 - 4.1 psi	3.1 - 4.1 psi
350 HP	2.5 in	4.3 - 5.4 psi	4.2 - 5.3 psi	2.1 - 3.2 psi	2.1 - 3.2 psi	2.0 - 3.2 psi	2.0 - 3.1 psi
350 HP	3.0 in	4.0 - 4.3 psi	3.8 - 4.2 psi	1.7 - 2.1 psi	1.7 - 2.1 psi	1.7 - 2.0 psi	1.6 - 2.0 psi
350 HP	4.0 in	3.7 - 4.0 psi	3.6 - 3.8 psi	1.5 - 1.7 psi	1.5 - 1.7 psi	1.4 - 1.7 psi	1.4 - 1.6 psi
400 HP	1.5 in - 2.0 in	6.9 - 10.3 psi	6.9 - 10.4 psi	4.6 - 8.7 psi	4.6 - 7.7 psi	4.6 - 7.7 psi	4.5 - 7.7 psi
400 HP	2.0 in	5.5 - 6.9 psi	5.6 - 6.9 psi	3.2 - 4.6 psi	3.2 - 4.6 psi	3.2 - 4.5 psi	3.2 - 4.5 psi
400 HP	2.5 in	4.1 - 5.5 psi	4.2 - 5.6 psi	1.8 - 3.2 psi	1.8 - 3.2 psi	1.8 - 3.2 psi	1.8 - 3.2 psi
400 HP	3.0 in	3.7 - 4.1 psi	3.8 - 4.2 psi	1.3 - 1.8 psi	1.3 - 1.8 psi	1.3 - 1.8 psi	1.3 - 1.8 psi
400 HP	4.0 in	3.4 - 3.7 psi	3.5 - 3.8 psi	1.1 - 1.3 psi	1.0 - 1.3 psi	1.0 - 1.3 psi	1.0 - 1.3 psi
500 HP	1.5 in - 2.5 in	7.6 - 11.4 psi	7.6 - 11.4 psi	6.4 - 9.6 psi	6.4 - 9.5 psi	6.3 - 9.5 psi	6.3 - 9.4 psi
500 HP	2.0 in - 2.5 in	5.8 - 7.6 psi	5.8 - 7.6 psi	4.6 - 6.4 psi	4.6 - 6.4 psi	4.5 - 6.3 psi	4.5 - 6.3 psi
500 HP	2.5 in	3.9 - 5.8 psi	3.9 - 5.8 psi	2.7 - 4.6 psi	2.7 - 4.6 psi	2.7 - 4.5 psi	2.6 - 4.5 psi
500 HP	3.0 in	3.3 - 3.9 psi	3.3 - 3.9 psi	2.0 - 2.7 psi	2.0 - 2.7 psi	2.0 - 2.7 psi	2.0 - 2.6 psi
500 HP	4.0 in	2.8 - 3.3 psi	2.8 - 3.3 psi	1.6 - 2.0 psi	1.6 - 2.0 psi	1.5 - 2.0 psi	1.5 - 2.0 psi
600 HP	1.5 in - 2.5 in	10.5 - 15.0 psi	10.5 - 15.0 psi	9.0 - 13.5 psi	9.0 - 13.4 psi	8.9 - 13.3 psi	8.8 - 13.3 psi
600 HP	2.0 in - 2.5 in	8.0 - 10.5 psi	8.0 - 10.5 psi	6.5 - 9.0 psi	6.5 - 9.0 psi	6.4 - 8.9 psi	6.3 - 8.8 psi
600 HP	2.5 in	5.4 - 8.0 psi	5.4 - 8.0 psi	3.9 - 6.5 psi	3.8 - 6.5 psi	3.8 - 6.4 psi	3.7 - 6.3 psi
600 HP	2.5 in - 3.0 in	5.2 - 5.4 psi	5.2 - 5.4 psi	3.7 - 3.9 psi	3.6 - 3.8 psi	3.5 - 3.8 psi	3.5 - 3.7 psi
600 HP	3.0 in	4.3 - 5.2 psi	4.3 - 5.2 psi	2.8 - 3.7 psi	2.7 - 3.6 psi	2.7 - 3.5 psi	2.6 - 3.5 psi
600 HP	4.0 in	3.7 - 4.3 psi	3.7 - 4.3 psi	2.2 - 2.8 psi	2.1 - 2.7 psi	2.0 - 2.7 psi	2.0 - 2.6 psi

Table 27: Gas Pressure Requirements 125-800 HP (Continued)

BOILER HP	GAS TRAIN SIZE	GAS PRESSURE RANGE					
		09 ppm	15 ppm	20 ppm	30 ppm	60 ppm	UC
700 HP	2.0 in - 3.0 in	11.0 - 15.0 psi	10.7 - 15.0 psi	8.7 - 13.1 psi	8.6 - 13.0 psi	8.6 - 12.9 psi	8.6 - 12.8 psi
700 HP	2.5 in - 3.0 in	7.1 - 9.0 psi	6.8 - 9.0 psi	4.8 - 5.0 psi	4.7 - 5.0 psi	4.7 - 5.0 psi	4.6 - 5.0 psi
700 HP	3.0 in	6.0 - 7.1 psi	5.7 - 6.8 psi	3.6 - 4.8 psi	3.6 - 4.7 psi	3.5 - 4.7 psi	3.5 - 4.6 psi
700 HP	4.0 in	5.1 - 6.0 psi	4.8 - 5.7 psi	2.8 - 3.6 psi	2.7 - 3.6 psi	2.7 - 3.5 psi	2.6 - 3.5 psi
800 HP	2.0 in - 3.0 in				10.8 - 15.0 psi	10.7 - 15.0 psi	10.6 - 15.0 psi
800 HP	2.5 in - 3.0 in				6.1 - 9.0 psi	6.0 - 10.0 psi	5.9 - 10.0 psi
800 HP	3.0 in				4.8 - 6.1 psi	4.7 - 5.0 psi	4.6 - 5.0 psi
800 HP	4.0 in				3.5 - 4.8 psi	3.4 - 4.7 psi	3.4 - 4.6 psi

NOTE: On standard gas trains, manual shutoff valve is a butterball type for connection sizes up to and including 2 inches. Larger than 2 inch connections use a plug cock type valve. If upgrading to a plug cock valve for a 2 inch or smaller connection, pressure requirements may change. Contact C-B.

For altitudes above 700 feet, contact your local Cleaver-Brooks representative.

NOTE: In cases where the gas train increases in size after the regulating valve, two diameters are listed. The first number is the customer connection size.

Table 28: Minimum required regulated gas pressure altitude conversion

ALTITUDE (FT)	CORRECTION FACTOR	ALTITUDE (FT)	CORRECTION FACTOR
1000	1.04	6000	1.25
2000	1.07	7000	1.30
3000	1.11	8000	1.35
4000	1.16	9000	1.40
5000	1.21	-	-

To obtain minimum required gas pressure at altitudes above 700 feet, multiply the pressure by the listed factors:
Inches WC x 0.577 = oz/sq-in.
Oz/sq-in x 1.732 = Inches WC
Inches WC x 0.0361= psig.
Oz/sq-in x 0.0625 = psig.
Psig x 27.71 = Inches WC
Psig x 16.0 = Oz/sq-in.

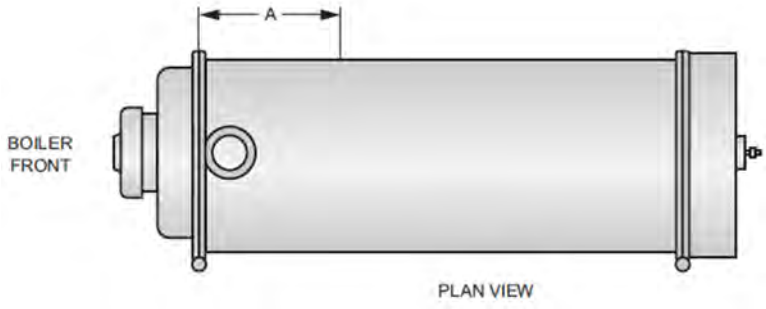

BOILER HP	MODEL CB	
	CONNECTION SIZE (IN. NPT)	LOCATION DIMENSION "A" (IN.)
50	2	74
60-80	2	74
100	2	74
125-200	1-1/2	52
250-350	2	56
400	2	58
500	2-1/2	60
600	2-1/2 - 3	71
700-800	3	65

Figure 15. Standard Gas Train Connection Size and Location

Stack Support Capabilities

All standard Cleaver-Brooks Firetube Boilers with an LE option can support up to 2,000 lbs without additional support.

LE Boilers 250 hp through 800 hp can be reinforced to support 3,000 lbs.

Stack/Breeching Size Criteria

The design of the stack and breeching must provide the required draft at each boiler flue gas outlet. Proper draft is critical to burner performance.

Although constant pressure at the flue gas outlet of the Model CB-LE is not required, it is necessary to size the stack/breeching to limit flue gas pressure variation. The allowable pressure range is –0.25" W.C. to +0.25" W.C.

Stack and breeching sizes should always be provided by a reputable stack supplier who will design the stack and breeching system based on the above criteria. Your local Cleaver-Brooks authorized representative is capable of assisting in your evaluation of the stack/breeching design.

Boiler Room Combustion Air

When determining boiler room air requirements, the size of the room, air flow, and velocity of air must be reviewed as follows:

1. Size (area) and location of air supply openings in boiler room.
   A. Two (2) permanent air supply openings in the outer walls of the boiler room are recommended. Locate (1) at each end of the boiler room, preferably below a height of 7 feet. This allows air to sweep the length of the boiler.
   B. Air supply openings can be louvered for weather protection, but they should not be covered with fine mesh wire, as this type of covering has poor air flow qualities and is subject to clogging by dust or dirt.
   C. A vent fan in the boiler room is not recommended, as it could create a slight vacuum under certain conditions and cause variations in the quantity of combustion air. This can result in unsatisfactory burner performance.
   D. Under no condition should the total area of the air supply openings be less than (1) square foot.
   E. Size the openings by using the formula:
   Area (sq-ft) = CFM/FPM
2. Amount of air required (cfm).
   A. Combustion Air = Rated bhp x 8 cfm/bhp.
   B. Ventilation Air = Maximum bhp x 2 cfm/bhp
   C. Total recommended air = 10 cfm/bhp - up to 1000 feet elevation. Add 3 percent more per 1000 feet of added elevation.
3. Acceptable air velocity in Boiler Room (fpm).
   A. From floor to (7) foot height - 250 fpm
   B. Above (7) foot height - 500 fpm

Example: Determine the area of the boiler room air supply openings for (1) 300 hp boiler at 800 feet altitude. The air openings are to be 5 feet above floor level.

- Air required: 300 x 10 = 3000 cfm (from 2B above).
- Air velocity: Up to 7 feet = 250 fpm (from 3 above).
- Area Required: Area = cfm = 3000/250 = 12 sq-ft total.
- Area/Opening: 12/2 = 6 sq-ft/opening (2 required).

Consult local codes, which may supersede these requirements.

NOTE for <9ppm, <7ppm, and <5ppm applications (NT and LNO burners):
Boiler air inlets must not be connected to a common manifold. Care must be taken to ensure minimal changes in boiler room static pressure throughout operation.

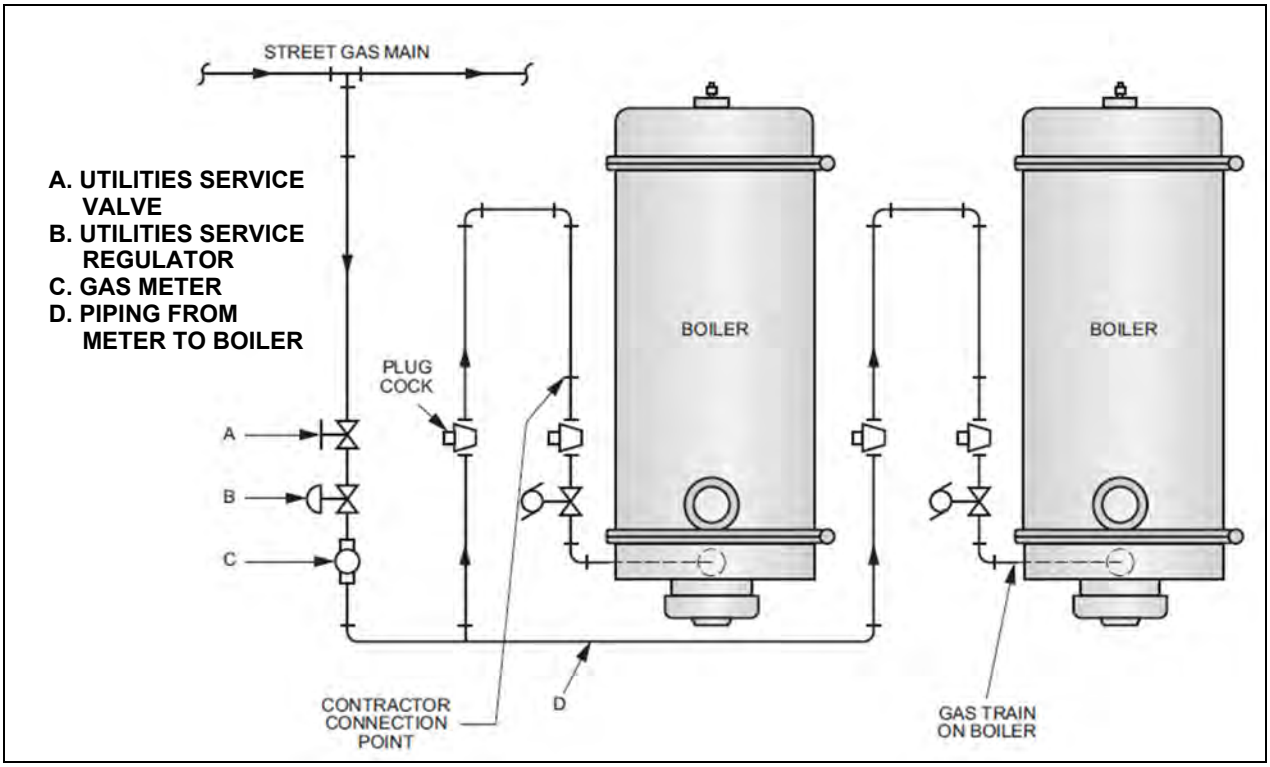

Figure 16. Typical Gas Piping Layout

This figure illustrates the basic gas valve arrangement on Cleaver-Brooks Model CB boiler and shows the contractor's connection point. The valves and controls between the contractor connection point and the gas main in the street are representative of a typical installation. Actual requirements may vary depending on local codes or local gas company requirements which should be investigated prior to preparation of specifications and prior to construction.

The size of the gas line from the meter to the gas pressure regulator at the boiler can be very important if gas pressures are marginal. The gas line sizing is dependent on:

1. Gas pressure at outlet of gas meter (C)
2. Rate of gas flow required, CFH
3. Length of pipe run (D)
4. Pressure required at contractor connection point.

The local gas utility will advise the pressure that is available at the outlet of their meter.

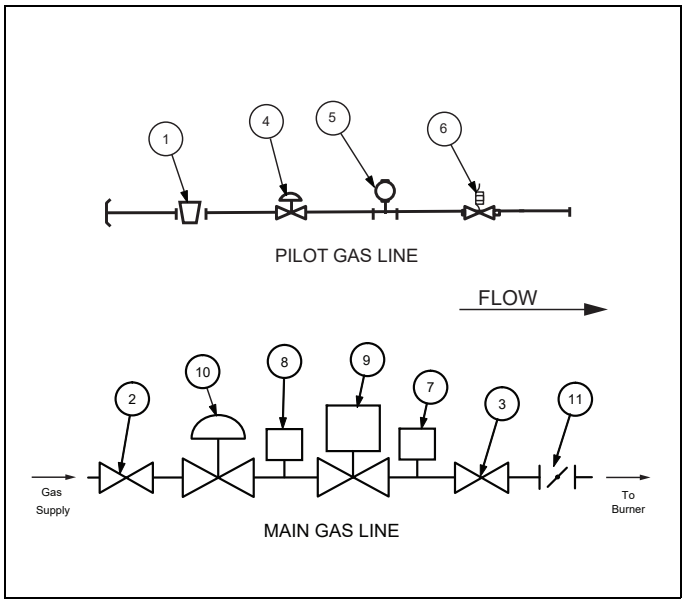

ITEM	DESCRIPTION	INS	UL		FM	CSD-1	
		BOILER HP	50	60-100	50-100	50	60-100
1	Pilot Shut Off Cock		x	x	x	x	x
2	Manual Shut Off Valve		x	x	x	x	x
3	Manual Shut Off Valve		x	x	x	x	x
4	Pilot Pressure Regulator		x	x	x	x	x
5	Pilot Pressure Gauge		x	x	x	x	x
6	Gas Pilot Valve		x	x	x	x	x
7	High Gas Pressure Switch			x	x		x
8	Low Gas Pressure Switch			x	x		x
9	Main Gas Valve with POC		x	x	x	x	x
10	Main Gas Regulator		x	x	x	x	x
11	Butterfly Valve		x	x	x	x	x

Figure 17. Gas Train Components 50-100 HP

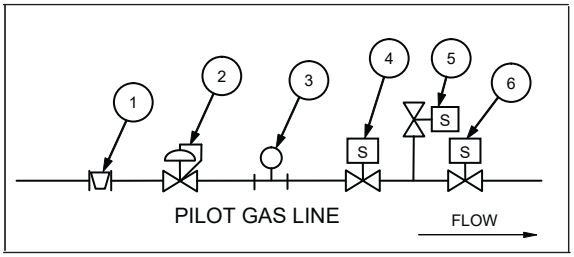

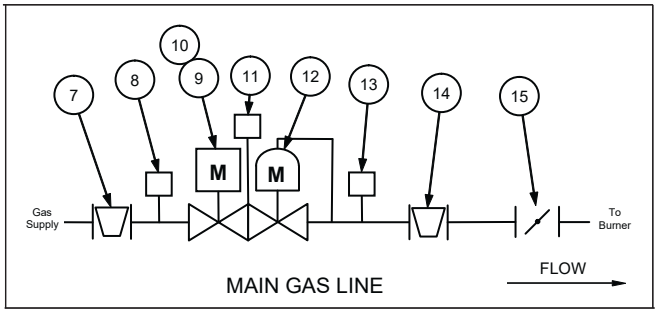

ITEM	DESCRIPTION	UL		FM		CSD-1	NFPA-85
		125 hp - 300 hp	350 hp - 800 hp	125 hp - 300 hp	350 hp - 800 hp	125 hp - 300 hp	350 hp - 800 hp
1	Pilot Shut Off Cock	X	X	X	X	X	X
2	Pilot Pressure Regulator	X	X	X	X	X	X
3	Pilot Pressure Gauge	X	X	X	X	X	X
4	Gas Pilot Valve	X	X	X	X	X	X
5	Pilot Vent Valve						X
6	Gas Pilot Valve						X
7	Manual Shut Off Valve	X	X	X	X	X	X
8	Low Gas Pressure Switch	X	X	X	X	X	X
9	Main Gas Valve w/o POC	X	X	X		X	
10	Main Gas Valve w/ POC				X		X
11	Vent Valve or Valve Proving Switch		X		X		X
12	Regulating Gas Valve w/ POC	X	X	X	X	X	X
13	High Gas Pressure Switch	X	X	X	X	X	X
14	Manual Shut Off Valve	X	X	X	X	X	X
15	Butterfly Valve	X	X	X	X	X	X

Figure 18. Gas Train Components 125-800 HP

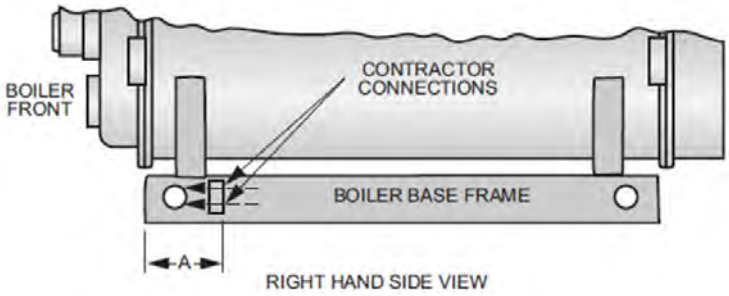

BOILER HP	SUPPLY AND RETURN CONN SIZES (IN. NPT)	A (IN.)	RECOMMENDED OIL LINE[A] SIZES (STANDARD PIPE) (IN. - IPS)		
			STORAGE TANK TO BOILER OR PUMP CONNECT	PUMP TO BOIL-ER	RETURN LINE TO TANK
50, 60	3/4	11-1/2	3/4	1	3/4
70,80	3/4	11-1/2	3/4	1	3/4
100	3/4	11-1/2	1	1	1
125, 150, 200	3/4	12-1/2	1	1	1
250, 300, 350	3/4	34	1	1	1
400, 500, 600	3/4	11-3/4	1	1	1
700, 800	1	11-3/4	1	1	1

NOTE: See No. 2 Oil Line Sizing Instruction for systems with other conditions.
A. For suction line condition with a maximum of 10 ft of lift and a total of 100 ft of suction line.

Figure 19. No.2 Oil Connection Size, Location, and Recommended Line Sizes

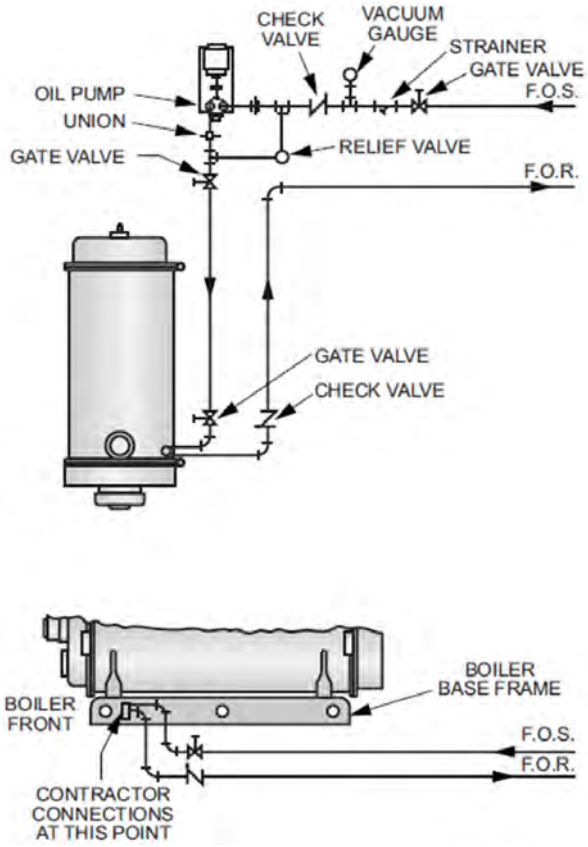

Figure 20. No. 2 Oil Piping, Single Boiler Installation, Remote Oil Pump

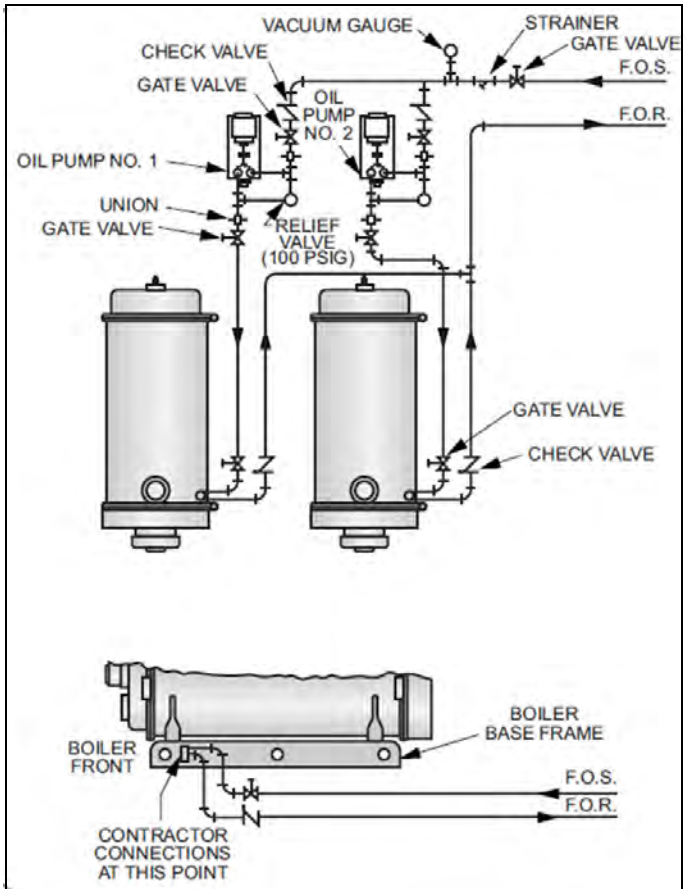

Figure 21. No. 2 Oil Piping, Multiple Boiler Installation, Remote Oil Pumps

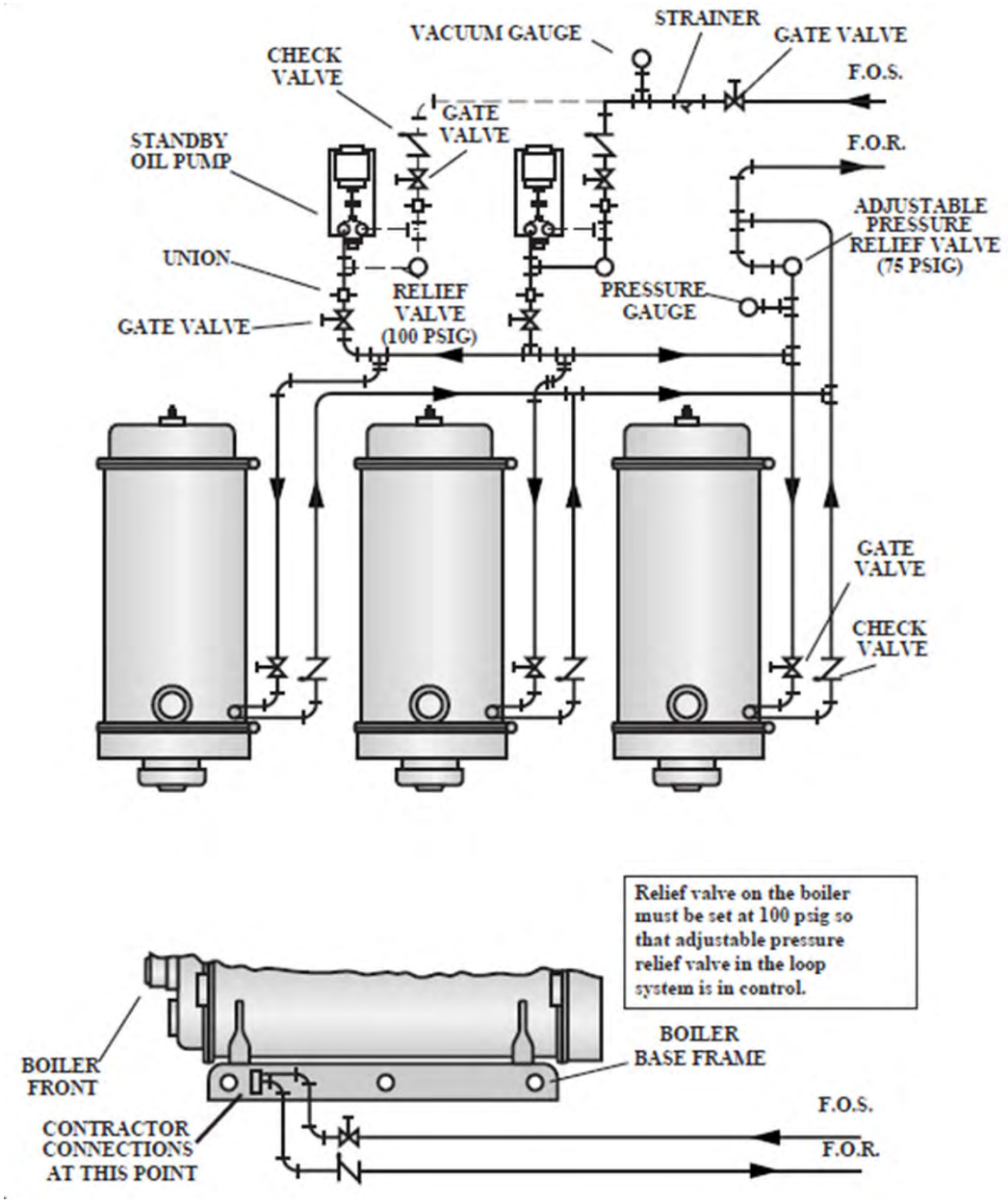

Figure 21. No. 2 Oil Piping, Multiple Boiler Installation

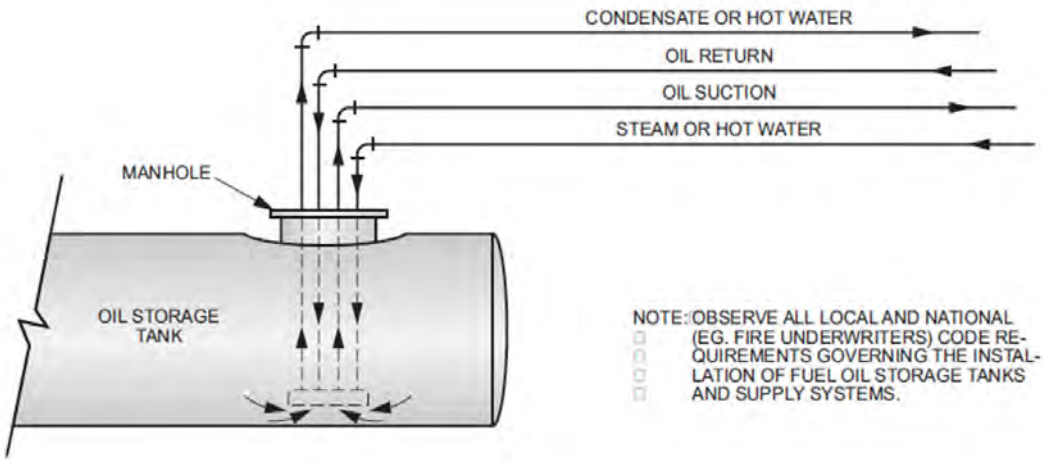

Figure 22. No. 2 Oil Piping Typical Arrangement

Table 29: Blowdown Tank Sizing

BOILER HP	WATER (GAL)
50-60	55
70-80	80
100	93
125	97
150	118
200	145
250	146
300	176
350	210
400	177
500	209
600	250
700, 800	296

NOTE: Quantity of water removed from boiler by lowering normal water line 4".

Table 30: Heating Surface

BOILER HP	HEATING SURFACE (SQ-FT)	
	FIRESIDE	WATERSIDE
50	250	266
60	300	323
70	350	388
80	400	441
100	500	544
125	625	679
150	750	820
200	1000	1092
250	1250	1346
300	1500	1623
350	1750	1932
400	2000	2151
500	2500	2691
600	3000	3262
700, 800	3500	3810

Table 31: Steam Volume and Disengaging Area

BOILER HP	STEAM VOLUME CU-FT		STEAM DISENGAGING AREA SQ-IN	
	HIGH PRESSURE[A]	LOW PRESSURE[B]	HIGH PRESSURE[A]	LOW PRESSURE[B]
50	9.7	16.0	2959	3372
60	9.7	16.0	2959	3372
70	14.3	23.7	4367	4975
80	14.3	23.7	4367	4975
100	16.6	27.4	5053	5757
125	25.4	36.6	5371	5887
150	30.7	44.3	6511	7138
200	37.7	54.4	7985	8752
250	49.2	70.6	7980	8695
300	59.5	85.3	9651	10516
350	70.9	101.7	11507	12538
400	72.1	97.9	9793	10593
500	83.7	113.7	11376	12303
600	101.5	137.8	13787	14911
700-800	119.8	162.7	16273	17600

NOTE: Based on normal water level.
A. Based on 150 psig design pressure.
B. Based on 15 psig design pressure.

Table 32: Recommended Steam Nozzle Size (for 4000 to 5000 fpm nozzle velocity)

OPERATING PRESSURE PSIG	Boiler HP															
	50	60	70	80	100	125	150	200	250	300	350	400	500	600	700	800
10	6	6	6	6	8	8	8	10	10	12	12	14	14	16	16	18
15	6	6	6	6	8	8	8	10	10	12	12	12	12	14	16	16
30	4	4	4	4	6	6	6	8	8	8	10	10	10	12	12	14
40	3	4	4	4	6	6	6	6	8	8	8	10	10	10	12	12
50	3	3	4	4	4	6	6	6	6	8	8	8	10	10	10	12
75	3	3	3	3	4	4	4	6	6	6	8	8	8	8	10	10
100	3	3	3	3	4	4	4	6	6	6	6	6	8	8	8	10
125	3	3	3	3	4	4	4	4	6	6	6	6	8	8	8	8
150	2.5	2.5	2.5	2.5	2.5	3	3	4	4	6	6	6	6	6	8	8
200	2.5	2.5	2.5	2.5	2.5	2.5	3	4	4	4	4	6	6	6	6	6
250	2	2	2	2	2	2.5	2.5	3	4	4	4	4	6	6	6	6

NOTES:
1. Steam nozzle sizes given in inches.
2. Recommended steam nozzle sizes based on 4000 to 5000 fpm steam velocity.
3. All standard steam nozzle sizes for 150 psig design pressure or greater are the same as 125 psig operating pressure on the above table. To increase or decrease the standard size, request the change with your local Cleaver-Brooks authorized representative.
4. For incremental operating pressures contact your local Cleaver-Brooks authorized representative.

Table 33: Recommended Non-Return Valve Size

BOILER HP	BOILER CAPACITY (LBS/HR)	OPERATING PRESSURE (PSIG)							
		50	75	100	125	150	175	200	250
100	3450	2-1/2	2-1/2	NA	NA	NA	NA	NA	NA
125	4313	3	2-1/2	2-1/2	2-1/2	NA	NA	NA	NA
150	5175	3	3	2-1/2	2-1/2	2-1/2	2-1/2	NA	NA
200	6900	3*	3	3	3	3	2-1/2	2-1/2	2-1/2
250	8625	4	3*	3	3	3	3	3	3
300	10350	4	4	4	3*	3	3	3	3
350	12025	4	4	4	4	4	3*	3	3
400	13800	5	4	4	4	4	4	4	3*
500	17210	6	5	5	4	4	4	4	4
600	20700	6	6	5	5	5	4	4	4
700	24150	6	6	6	5	5	5	5	4
800	27600	6	6	6	6	6	5	5	5

NOTE: Valve sizes (300 # Flanges) given in inches.
Standard Non-Return valve selections limited to a maximum 2 to 1 turndown (50% of full load); selections based on typical non-return valve sizing recommendations. For final valve selection contact your C-B authorized representative.
* Indicates pressure drop of less than 7.5 psig. All other selections are less than 6 psig pressure drop.

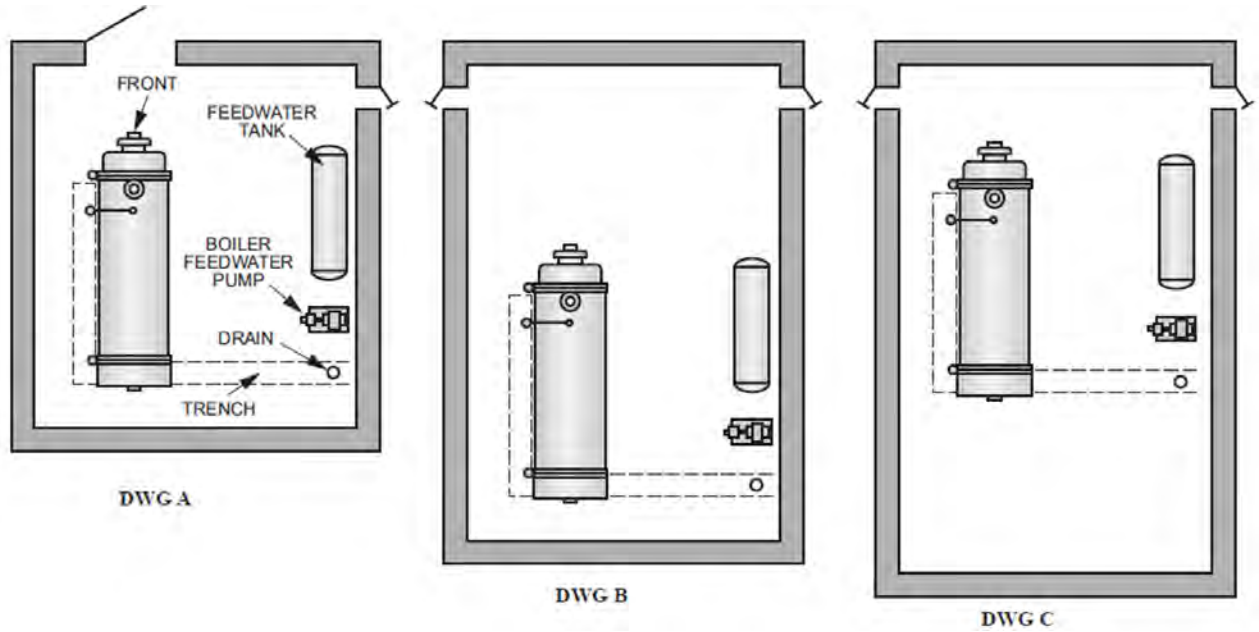

Figure 23. Boiler Room Length (Typical Layouts)

1. Shortest boiler room length (Dwg A) is obtained by allowing for possible future tube replacement (from front or rear of boiler) through a window or doorway. Allowance is only made for minimum door swing at each end of the boiler. This arrangement provides sufficient aisle space at the front of the boiler but a “tight” space condition at the rear. If space permits, approximately 1.5 additional feet should be allowed at the rear for additional aisle and working space.
2. Next shortest boiler room length (Dwg B) is obtained by allowing for possible future tube replacement from the front of the boiler. Allowance is only made for minimum door swing at the rear. If space permits, approximately 1.5 additional feet should be allowed at the rear for additional aisle and working space.
3. A slightly longer boiler room (Dwg C) is obtained by allowing for possible future tube replacement from the rear of the boiler. Allowance for door swing at the front provides sufficient aisle and working space at the front.

	BOILER HP			
	50-100	**125-200**	**250-350**	**400-800**
Dimension A	81”	82"	93"	102"
Dimension B	115”	115"	141"	171"

NOTES:
1. Recommended Minimum Distance Between Boiler and Wall. Dimension “A” allows for a clear 42" aisle between the water column on the boiler and the wall. If space permits, this aisle should be widened.
2. Recommended Minimum Distance Between Boilers. Dimension “B” between boilers allows for a clear aisle of:
   42" - 50-200 hp
   48" - 250-350 hp
   60" - 400-800 hp
   If space permits, this aisle should be widened.

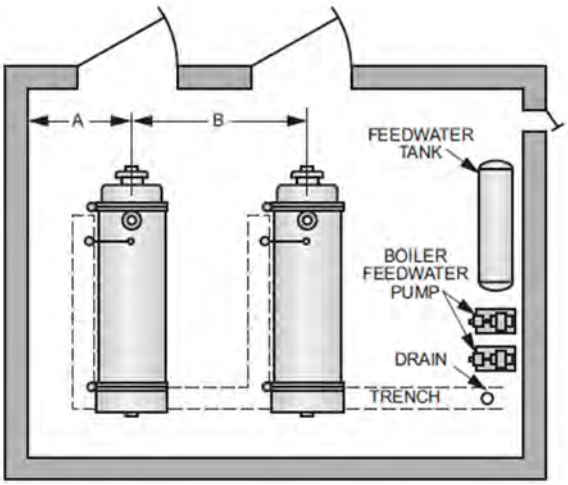

Figure 24. Boiler Room Width (Typical Layout)

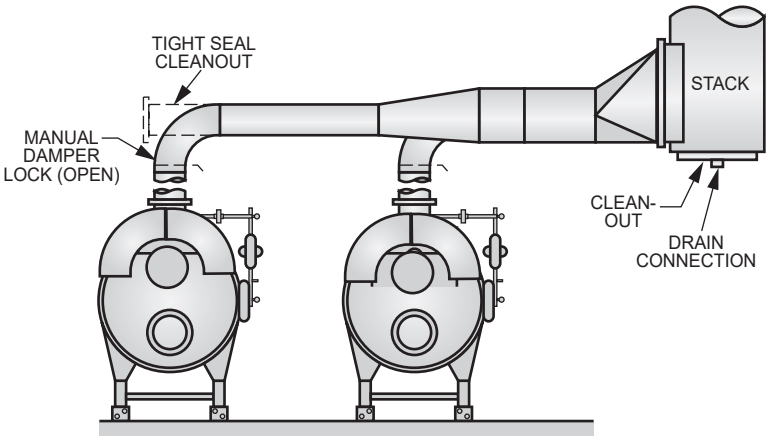

MULTIPLE BOILERS WITH A COMMON STACK

NOTE: These stack breeching arrangements for multiple boilers are typical examples only and may not meet all specific design requirements.

Stack and breeching sizes should always be provided by a reputable stack supplier who will design the stack and breeching system based on your specific criteria. Your local Cleaver-Brooks authorized representative is capable of assisting in your evaluation of stack and breeching design.

NOTE for <9ppm, <7ppm, <5ppm NOx applications (NT or LNO burner):

Every boiler requires its own independent exhaust stack

OR

If a single free standing or similar stack is used for multiple boilers, each boiler requires its own independent breeching to the stack and the application requires C-B approval.

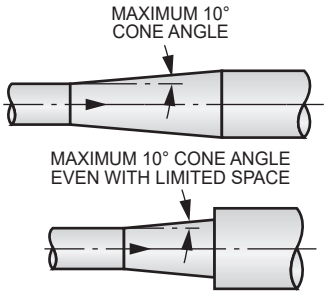

DETAIL OF TRANSITION PIECES

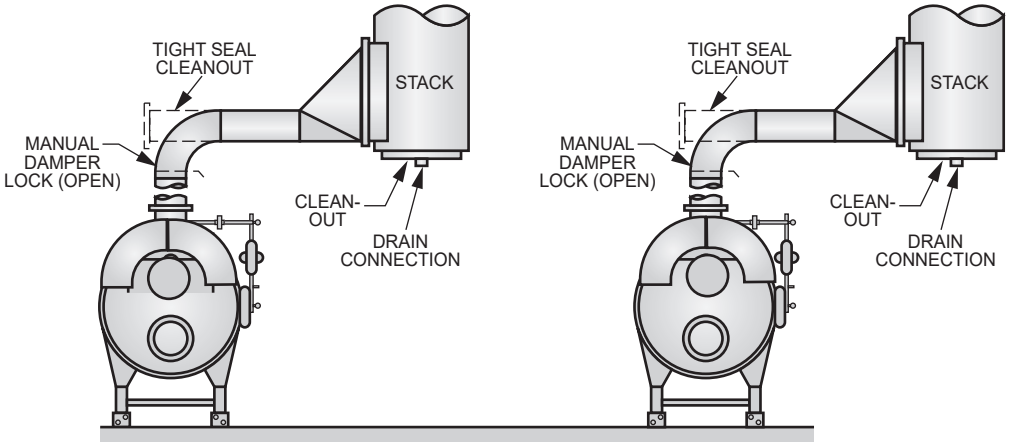

MULTIPLE BOILERS WITH INDIVIDUAL STACKS

Figure 25. Breeching Arrangement, Multiple Boilers

Water Chemistry

For boilers operating below 150 psig, Cleaver-Brooks recommends the following guidelines for steam and hot water boilers:

Table 34: Boiler Water Chemistry

QUANTITY	LIMITS
Oxygen	<0.005 ppm
CO2	0 ppm
Hardness	<2.0 ppm
Suspended Solids	<300 ppm
pH	8.5 - 10.5
Sulfite	50 - 100 ppm
Fe (Iron)	<0.1 ppm
Silica	<150 ppm
Total Alkalinity	<700 ppm
Dissolved Solids	<3,000 ppm

Due to the many variables involved in maintaining proper boiler water chemistry, it is impossible to recommend a single water treatment solution appropriate to all applications. Cleaver-Brooks recommends boiler owners hire a local water treatment specialist knowledgeable in boiler systems to assist in designing and implementing a treatment plan.

A good plan will include daily testing of water chemistry by plant personnel and weekly or monthly site visits by the water treatment specialist. A log book should be kept to record testing results and adjustments to the treatment plan.

Scotch Marine Boiler

HURST PERFORMANCE SERIES BOILERS

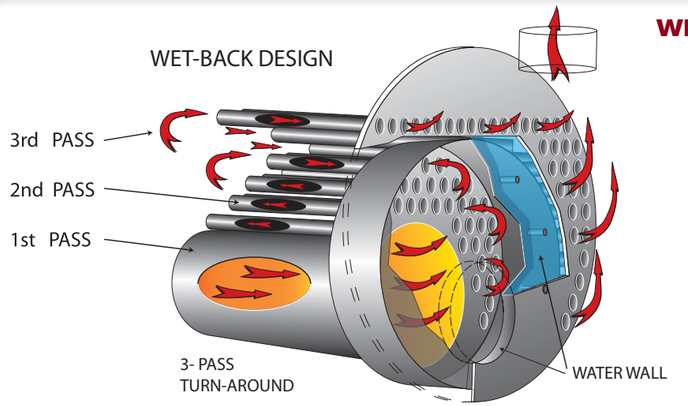

WET BACK ADVANTAGE

Dry backs boilers are subject to deteriorating rear refractory, leaking baffles, leaking door seals, and often found with a heat-stressed rear tube sheet. Fragile refractory baffling and door seals will require continuous monitoring, maintenance, and replacement, costing thousands of dollars in materials and specialized labor costs over the life of the boiler. In addition, broken baffles and leaking seals will short-circuit the boiler's gas flow, causing high stack temperatures and lowering efficiency until repairs can be made. This can bring your production process to a costly halt.

All of those frustrating problems have been designed out of the Hurst Series 400 Wet back. It has a full wet back radiant heat transfer area that promotes superior internal water circulation and rapid heat absorption. Separate rear tube sheets allow each pass of tubes to expand and contract at its own rate without tube-to-sheet stress. Tubes are mechanically rolled, flared and beaded, making any tube service a simple matter. The only rear refractory is a manway plug which allows access to the furnace for inspection.

Stress Relieving "Wet Back" Construction for Extended Life

Standard Steam Trim

- Operating & high limit pressure control
- Modulating pressure control (when appl.)
- Water column with gauge glass, combination low water cut-off & pump control
- Probe Aux, L.W.C.O. w/ Manual Reset Steam pressure gauge, syphon & test cock
- Stack Thermometer, Water column drain valve
- Safety relief valve(s) per ASME Code

Standard Water Trim

- Operating & high limit temperature control
- Modulating temperature control (when appl.)
- Probe type low water cut-off control w/ Manual Reset
- Combination pressure & temperature gauge
- Hot water return baffle for shock resistance
- Safety relief valve(s) per ASME Code
- Stack Thermometer

HBC-09506
08/2009

hurstboiler.com
HURST BOILER & WELDING CO., INC.
100 Boilermaker Lane • Coolidge, GA 31738-0530
Tel: (229) 346-3545 • Fax: (229) 346-3874
email: info@hurstboiler.com

HURST
BOILER & WELDING CO., INC

AVAILABLE WITH LOW NOX

SERIES 400

3-PASS SCOTCH MARINE DESIGN with Wetback Construction

High PRESSURE BOILER.
Capacities From 30 to 1500 BHP.
1004 to 50213 MBTU/HR.

STEAM
Pressures to 15-300 PSI.

HOT WATER
Section I and Section IV

UL Listed
Burner/Boiler Packaged

SKID MOUNTED
MODULAR PACKAGED

Wet Back Design Eliminates Refractory Rear Door & Baffles Between Flue Gas Passes

HURST PERFORMANCE SERIES BOILERS

SERIES 400

Leading Through Innovation...

CUT AWAY VIEW

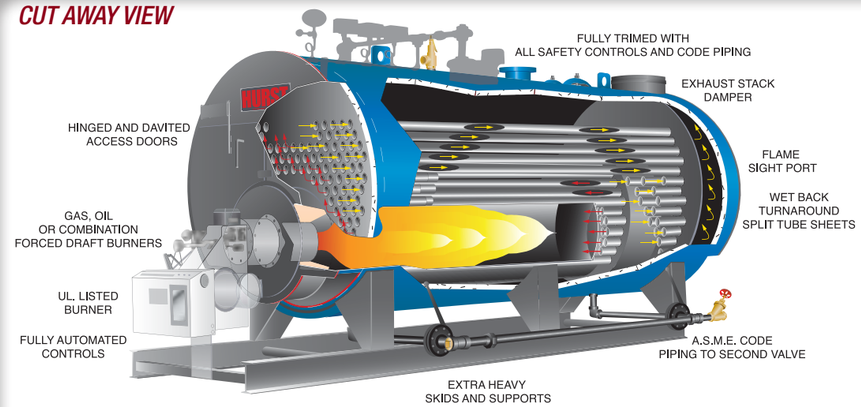

Inspected and registered with the National Board of Boiler & Pressure Vessel Inspectors.

Designed, constructed and stamped in accordance with the requirements of the ASME Boiler Codes.

hurstboiler.com

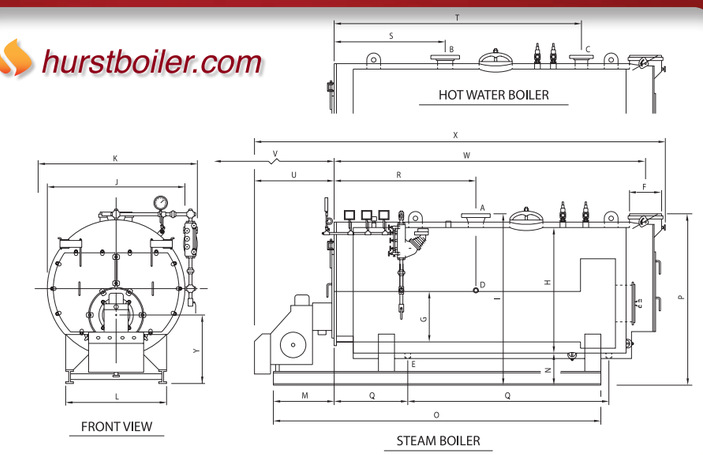

BOILER SPECIFICATIONS

SEMI WET BACK

BOILER HORSEPOWER			30	40	50	60	70	80	100	125	150	200	250
HEATING SURFACE	FIRESIDE	SQ. FT.	150	200	250	300	350	400	500	625	750	1000	1250
STEAM OUTPUT	FROM &@ 212°	LBS/HR	1035	1380	1725	2070	2415	2760	3450	4313	5175	6900	8625
GROSS OUTPUT		MBH	1004	1339	1674	2009	2343	2678	3348	4184	5021	6695	8369
FIRING RATE GAS	1,000 BTU/CF	CFH	1260	1680	2100	2520	2940	3360	4200	5250	6300	8400	10500
FIRING RATE LP GAS	91,500 BTU	GPH	13.8	18.4	23	27.5	32	36.7	46	57	69	92	115
FIRING RATE OIL #2	140,000 BTU	GPH	9	12	15	18	21	24	29.9	37.4	45	60	75
FIRING RATE OIL #5 & #6	150,000 BTU	GPH	8.4	11.2	14	16.8	19.6	22.4	28	35	42	56	70
A *NOTE: 1 STEAM OUTLET SIZE	150 PSI	IN	1 1/2	2	2 1/2	2 1/2	3	3	4	4	4	4	6
A *NOTE: 2 STEAM OUTLET SIZE	15 PSI	IN	4	4	4	6	6	6	8	8	8	8	10
B *NOTE: 2 WATER SUPPLY SIZE	30 PSI	IN	4	4	4	6	6	6	8	8	8	8	10
C *NOTE: 2 WATER RETURN SIZE	30 PSI	IN	4	4	4	4	4	4	6	6	6	6	8
D FEEDWATER CONNECTION SIZE		IN	3/4	3/4	3/4	1	1	1 1/4	1 1/4	1 1/4	1 1/4	1 1/2	1 1/2
E BLOWDOWN CONNECTION (BTM)	HIGH PRESS.	IN	1	1 1/4	1 1/4	1 1/4	1 1/4	1 1/4	1 1/4	1 1/4	1 1/4	1 1/4	1 1/4
E BLOWDOWN CONNECTION (BTM)	LOW PRESS. & HW	IN	1 1/4	1 1/4	1 1/4	1 1/2	1 1/2	1 1/2	1 1/2	1 1/2	1 1/2	2	2
F STACK OUTLET SIZE O.D.		IN	10	10	10	12	12	12	14	14	14	16	18
G FURNACE O.D.		IN	14	14	16	18	18	18	22	26	26	30	32
H SHELL I.D.		IN	40	40	44	48	48	48	54	60	60	66	72
I SUPPLY HEIGHT		IN	55 1/4	55 3/8	59 3/4	63 3/4	66 5/8	66 5/8	74 5/8	81 3/4	81 3/4	90 3/4	93 3/4
J WIDTH WITHOUT TRIM		IN	46	46	50	54 5/8	54 5/8	54 5/8	60	66 1/2	66 1/2	72 1/2	78 1/2
K WIDTH WITH TRIM		IN	58	58	60	66	66	66	72	79	79	84	92
L SKID WIDTH		IN	34	34	36	40	40	40	44	48	48	51	57
M END OF SKID FROM FRT. PLATE		IN	13 1/2	14 1/2	15 1/4	15 1/4	15 1/4	15 1/4	21 3/4	25 1/8	25 1/8	23 1/4	28 5/8
N SHELL TO FLOOR		IN	12	12	12	12	12	12	14	15	15	18	15
O SKID LENGTH		IN	81	99	102	102	102	114	114	132	156	168	180
P STACK OUTLET HEIGHT		IN	58 5/8	58 5/8	62 5/8	66 5/8	66 5/8	66 5/8	74 5/8	81 3/4	81 3/4	90 3/4	93 3/4
Q BLOWDOWN LOCATION		IN	35 3/4	41	31 3/4	29 3/4	29 3/4	29 3/4	29 3/4-50	32 7/8-56	32 7/8-80	31 7/8-98	33 7/8-98
R STEAM OUTLET LOCATION	15 PSI & UP	IN	38 3/8	41 3/4	40 1/4	49 3/4	49 3/4	58 3/4	55 34	55 7/8	73 7/8	78 3/8	70
S SUPPLY LOCATION		IN	20 1/4	20 1/4	33 1/4	37 3/4	37 3/4	43 3/4	32 3/4	32	32	44 38	49 7/8
T RETURN LOCATION		IN	59 1/4	74 1/4	78 1/4	85 3/4	85 3/4	97 3/4	90 3/4	102	114	128 3/8	139 7/8
U BURNER PROJECTION	STND. BURNER	IN	32	36	36	36	36	40.5	40.5	45	45	45	45
V TUBE REMOVAL	FRONT	IN	68	85	88	91	91	102	96	108	132	150	152
W STACK OUTLET LOCATION		IN	78 1/2	95 3/4	98 3/4	104 3/4	104 3/4	116 3/4	111 3/4	123 7/8	148 7/8	166 13/16	170 7/8
X APPROX. OVERALL LENGTH		IN	118	139	142	149	149	167	163	179	205	223	229
Y CENTER LINE OF FURNACE	TO FLOOR	IN	27 5/16	27 5/16	28 13/16	31 5/16	31 5/16	31 5/16	29 13/16	33 3/4	33 3/4	38 3/8	35 3/8
APPROX. SHIPPING WEIGHT	150 PSI	LBS	3500	4100	4700	6450	6700	7150	8200	10400	11800	16600	18750
APPROX. SHIPPING WEIGHT.	15 & 30 PSI	LBS	3400	4000	4500	5665	5900	6200	7200	9400	10800	13700	17750
WATER CAPACITY - STEAM	NWL	GALS	215	272	324	389	371	429	482	681	848	1126	1412
WATER CAPACITY - WATER	FLOODED	GALS	252	320	382	445	427	492	564	793	985	1350	1633
BOILER HORSEPOWER			30	40	50	60	70	80	100	125	150	200	250

BOILER HORSEPOWER	300	350	400	500	600	700	750	800	900	1000	1200	1500
HEATING SURFACE	1500	1750	2000	2500	3000	3500	3750	4000	4500	5000	6000	7500
STEAM OUTPUT	10350	12075	13800	17250	20700	24150	25875	27600	31050	34500	41400	51750
GROSS OUTPUT	10043	11716	13390	16738	20085	23432	25106	26780	30128	33475	40170	50213
FIRING RATE GAS	12600	14700	16800	21000	25200	29400	31500	33600	37800	42000	50400	63000
FIRING RATE LP GAS	138	160	184	230	275	320	344	368	413	460	550	688
FIRING RATE OIL #2	90	105	120	150	180	210	225	240	2770	300	360	450
FIRING RATE OIL #5 & #6	84	98	112	140	168	196	210	224	252	280	336	420
A	6	6	6	6	8	8	8	8	8	8	10	10
A	10	10	10	10	12	12	12	12	14	14	14	14
B	10	10	10	10	12	12	12	12	12	12	14	14
C	8	8	8	8	8	10	10	10	12	12	14	14
D	2	2	2	2	2 1/2	2 1/2	2 1/2	2 1/2	2 1/2	2 1/2	2 1/2	2 1/2
E	1 1/2	1 1/2	1 1/2	1 1/2	1 1/2	2	2	2	2	2	2	2
E	2	2	2	2	2	2	2	2	2	2	2	2
F	20	20	24	24	28	28	28	30	30	30	32	32
G	34	34	38	38	44	52	52	52	52	52	56	56
H	84	84	90	96	102	112	112	112	112	112	126	136
I	108 3/4	108 3/4	115	121	127	137 1/4	137 1/4	137 1/4	137 1/4	137 1/4	152 1/4	162 1/2
J	90 3/4	90 3/4	96 1/4	102 3/4	108 3/4	119	119	119	119	119	133 1/2	144
K	103	103	109	115	121	136	136	136	136	136	153	165
L	64	64	70	76	78	92	92	92	92	92	108	114
M	30 5/8	35 5/8	32 5/8	32 5/8	52 5/8	35 1/8	34 5/8	36 5/8	49 5/8	49 5/8	55 5/8	59 1/2
N	18	18	18	18	18	18	18	18	18	18	18	18
O	180	204	198	212	240	207	218	228	264	288	294	320
P	108 3/4	108 3/4	115	122	138 1/4	138 1/4	138 1/4	138 1/4	138 1/4	138 1/4	152 1/4	162 1/2
Q	33 7/8-98	39 7/8-110	45 7/8-98	47 7/8-137	46 7/8-137	51 3/8-124	49 7/8-138	49 7/8-148	45 7/8-170	49 7/8-193	53 7/8-189	52 7/8-214
R	69 3/8	82 7/8	91 3/8	96 7/8	96 3/8	90 3/8	90 3/8	101 3/8	122	115 7/8	122 3/8	135 7/8
S	50 3/8	53 7/8	55 7/8	58 7/8	60	51 3/8	51 3/8	51 3/8	78	78	74 7/8	65 7/8
T	140 3/8	148 7/8	139 7/8	160 7/8	160	140 3/8	140 3/8	153 3/8	180	200	205 7/8	245 7/8
U	46	48	54	57	62	62	62	62	67	67	83	83
V	150	168	168	184	191	173	184	195	217	239	239	264
W	188 7/8	190 7/8	190 7/8	208 7/8	217 5/8	202 3/8	213 7/8	225 7/8	247 7/8	269 7/8	270 7/8	298 7/8
X	230	250	260	281	297	282	293	311	311	355	373	401
Y	41	41	43 1/2	44 1/4	47 1/2	50 1/4	50 1/4	50 1/4	50 1/4	50 1/4	52 5/8	53
APPROX. SHIPPING WEIGHT	27100	30200	2200	37900	46400	48100	54100	57200	61300	66400	82000	103000
APPROX. SHIPPING WEIGHT.	25800	28200	29500	34400	37400	40100	42500	44900	44700	54600	74000	93000
WATER CAPACITY - STEAM	1773	2009	2230	2918	3193	3121	3347	3562	3996	4425	5459	6927
WATER CAPACITY - WATER	2176	2461	2790	3627	4058	4043	4330	4605	5157	5706	7568	10205
BOILER HORSEPOWER	300	350	400	500	600	700	750	800	900	1000	1200	1500

BOILER DESIGN: Three-Pass "Scotch Marine" Firetube design with stress relieving "Wetback" construction. Pressure designs for steam are:
30-150 HP. > 450 PSI max.
200-300 HP. > 400 PSI max.
400-500 HP. > 350 PSI max.
600-600 HP. > 325 PSI max.
700-1000 HP. > 300 PSI max.
1200-1500 HP. > 250 PSI max.
1600-2000 HP. > 200 PSI max.
Hot Water pressures models are from 30-160 psi. High pressure, high temperature Section I hot water boilers available.
Factory assembled with trim, tested, ASME code, UL, and CSD-1 standards.

STEAM MODEL TRIM: Safety relief valve, operating pressure control, high limit pressure control with manual reset, steam pressure gauge with syphon, combination pump control and low water cut-off with gauge glass assembly and drain valve, auxiliary low water cut-off with manual reset.

HOT WATER MODEL TRIM: Safety relief valve, operating temperature control, high limit temperature control with manual reset, combination pressure & temperature gauge, low water cut-off control with manual reset.

BURNER: Matched UL listed "forced draft" power burners with factory pre-piped, wired and tested fuel configurations for natural gas, propane (LP) gas, No. 2 (diesel) oil, or combination of both gas/oil.

NOTE:1 3"& ABOVE ARE 300# ANSI FLANGE.
NOTE:2 4" & ABOVE ARE 150# ANSI FLANGE.
NOTE: 100 HP & LARGER HAS 12" X 16" MANWAY

ALL DIMENSIONS ARE IN INCHES
CERTIFIED DRAWING AVAILABLE UPON REQUEST.
DIMENSIONS SUBJECT TO CHANGE WITHOUT NOTICE.

MORE MODELS CHOICES SOLUTIONS

Effluent Building AHU

-'. " !*.)/ 012345675

89:9;:989<

EQUIPMENT

SUBMITTAL

-'. "À*)	ĀÀ !"#$ Ā &'(#)#*!'À$ +&,&(À-& .!"'(!/'
,'=À Ā#'"	ĀÀ !"#$
)" #"))/	+'(À$ 0""#/!À'&"
='"Ā/À=Ā'/	12.

ĀÀ	! "#Ā %Ā&	#"""'()"Ā *'+),
03456	6	703456899953:5;<9

BUILT TO ORDER. BUILT FOR EFFICIENCY. BUILT TO LAST.

&".) À-%' -.%,

ĀÀ "#$%

ĀÀ "&$ %'

(#)%

***À+), #'% -%'*.À"**

&".)) #/

$À(%0 " &$ %'

&".) 1 &#").)2

ĀÀ !"#$ Ā &'(#)#*!'À$ +&,&(À-& .!"'(!/'

)(#012342

5676876569

4:;:5

<=>14

?<=>1495551=@1A85

4

BHBX<KMNI

B*&CÀ'!#$DE'F G23

.MĀBI+MNI+

NC&(À*OÀP!OQO !O&$"!#$" D!$F

HBIJK= LM.K= =BMJ=K

36A 454 ;A

I>ĀRBS NT +B?KMNI+

4

LBMJ=K+

+U!))!$- ,&!-U' D*V"F

45W655

N)&(Ā'!$- , &!-U' D*V"F

45W655

#À$%&Ā')$%*+%&Ā,-$. &&Ā% / ĀÀ !"

-++'0,1DE$Ä &0E0*0-Ā #0+,

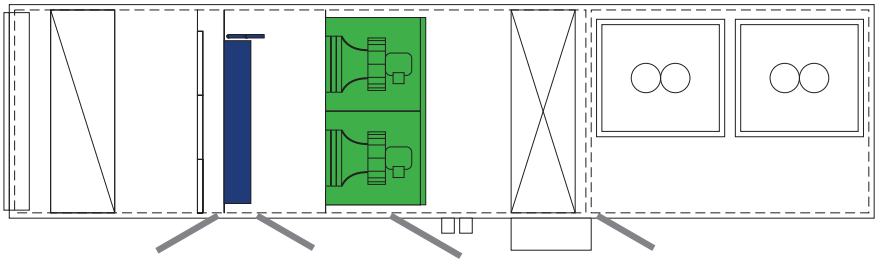

6I JKKLMNO J KML

			$,#$%0,1		'$Ā20,1		-Ā)Ā-0#/	
ĀÀ !"#$&!()	*+', -,"#'Ä./ &!0()	12'.Ä#34,(0, +.2 , &5*)	6 / 72"8&5*)	9 ,. 72"8&5*)	6 / 72"8&5*)	9,. 72"8&5*)	4#.+" :7;	1,3<Ä8", : 7;
=>?@@@	ABC	ACD=	EFDC	GBDH	>ADH	>ADH	CF=DA	AG@DA

* ĀN ; PĀ4 OĀMN

.34356)7899:78 ;5<=>=?=@	#8AB8743:780<678498 ;C*@
HD=F	=DE

À#Ā%$(

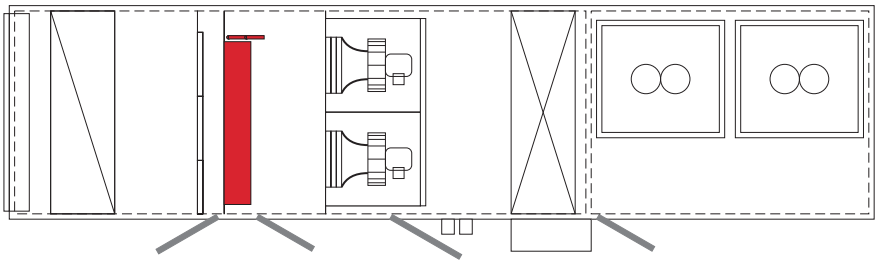

7CĀD EF6E 7CĀDGHI J KGL

		#$%#&'$(	)#Ā*'$(	+Ā,Ā+'%-
ĀÀ !"#$&!()	* +', - ,"#À./ &0()	1 / 23"4 &5*)	1 / 23"4 &5*)	6 27
89:;;;	<=>	?>@A	B;@;	A=;@9

1 33P T =ĀS

6,7 487937:6;<8

#$%&'(*+,'-	ĀÀ !!!
.$/0% 1/0/2+ 34(55&4(*267 8797-	"#Ā$
:;(40/269 3$8(4 *<;-	Ä#%Ā $
=06 1;((> ?3@	$ Ā($
@0A=06 1;((> ?3@	$ (!!
:;(40/269 =4(B&(6+C *ÄD-	)*
E%(F0/2$6 ,/-	!
=EG	%Ä
=EH	Ā#$!
=E3 *IJ-	*#)+
1/0/2+ E,,2+2(6+C*K-	+"

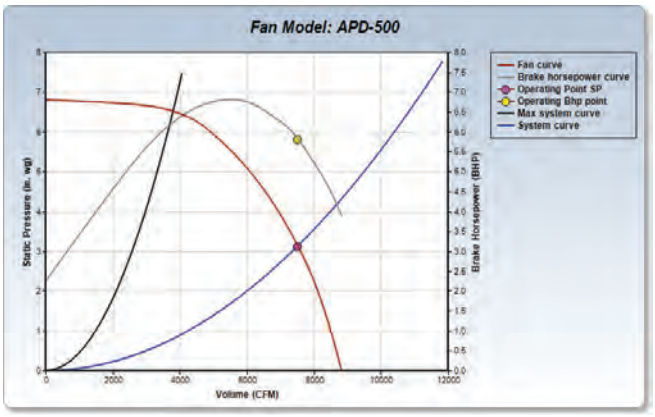

96; - 8=6,>

12L(*267-	Ā(#)
M%055	,,
N42F(. C;(	-./012
Ā440C1 2L(*4A +-	Ā ' $

:3=37 - 8=6,>

12L(*<;-	)#Ä' $
@$/$4 1;((> *?3@-	Ā %!!
E6+%$5&4(	3-4
#OMO3	*+!5"5+!

?=6=,< 478??@78 ?@::67A

1&;;%C=06 M$';$6(6/	1/0/2+ 34(55&4(*267 8 797-
EA/(460%1/0/2+ 34(55&4(	Ā#!!
M05269P$55	!#"!
1&;;%CĀ24=2%/(4 M%(06	!#$*
1&;;%CĀ24=2%/(4 P$0>269	!#"%
1&;;%CĀ24=2%/(4QM%(06	!#!!
1&;;%CĀ24=2%/(4QP$0>269	!#!!
NR M$$%269M$2%	!#%$
.$/0% 1/0/2+ 34(55&4(	"#Ā$

?3@;- 487937:6;<8

1$&6> N0/0	I6%(/	:&/%(/
+$#Ä	%(	%)
Ā$Ä	%Ä	%Ä
$Ä!	(*	(+
Ä!!	%(	(+
Ā!!!	%%	()
$!!!	%Ä	%(
*!!!	%Ä	(Ā
%!!!	)(	%$
>B6	("	Ā!!
CD6	%Ä	($
?EF0G	"Ä	*%

>BHI 6 B0.JK20CGELFCMEB0/ N0O0NHG0CEF 6;?, Ā#*

CD6I 6 B0.JK20CGELFCM/0GGL/0N0O0NHG0CEF ĀĀ#Ā
CD H220FLH2.EM0/ E12HOPHFCH2ĀQ2RCDNOO0NG
H/0 FE2N.10FG0PS 6:<6 ,F20/FH2.EFHN

?EF0GI<HN1LNH2OCG.FJ6:<6 "!Ā H2ĀQ2#

I* K, 9Ā#QĀ8A< ;IÀ9 JACJF8: IRI*A, ĀÀ !"

_CBC@1F *0*DC= A1@1=CDC@*

Ā6'04$E=10%?	%<G777
*$2-4 *$.)	H78%
F.3(&(.3(.2 #6'1/62)	4
G/%H(' $0I2-@()	I4J K(Ä(L)- MI4J NÀ5-/
J-2(3 J(0'6@('-26$. AAJ	%;8;
J-2(3 J(0'6@('-26$. #K9	H8%
J(0'6@('-.2	@O9<9P
,-L #6'1/62#M-'@(=4H)?	:68H
N,6.6%/% #$.3626$.(3 I &-1(=02O?	%%6<87

QK()"-R /-SÀ.-/ (L+T- (- Ä (!!+ /(.!- UÀ#ÀF H7WW<O4Q9.7Q -Y"Ä - (Ä !Ä !")(#Ä+. UÀ#VÄ#V-Ä.R#())-/ (-(8 N+ Ä.R#())(#Ä+.R-Z,)[Ä.' UÀ#ÄÄ)(RR1 /"!#U+ \ R-()Ä.' Z-#V+/R UÀ#VÄ#V- Ä.R#())-/ (-((R /-SÀ.-/ L[1B*E]*=1ÃB1 77HG K1Ã &"!# Ä+.R# "!#Ä+.*#(./(/RG .+ ZÄ.ÄZ"Z Ä.R#))(#Ä+(.-(ÄR -Y"Ä -/8 C.R" - ()) .(#Ä+.()G, +TÄ.!Ä() (./)+!() R(S-#[!+/-R (- S-))+U-/ UV-. ÄR#())Ä.' #VÄR"Ä,Z-.# Ä.!)"/Ä.' !+.RÄ/- (#Ä+.R S+ #V-Ä.R#())-/)+!(#Ä+. (./ L"Ä)/Ä.' +!!",(.![!)(RRÄSÄ!(#Ä+.8

NF2E&Ā?B&EDE?B*

84+1$4*+&(	`(#-
84+1$4P	7
*$2-4 89,	%;786

=1>?@ Ā?=A?BCBD &CD1EF*

#$%&'())$')	* +&(	, -./0-12/'('	,$3(4	5/-.262+
ĀÀ !"Ä#%	&Ä'Ä#(!! +))	Ā+,-)(./	01&2	%&Ä'Ä#(3 %* #('-/
ĀÀ !"Ä#4	&Ä'Ä#(!! +))	Ā+,-)(./	01&2	%&Ä'Ä#(3 %* #('-/

#6'1/62	#$.3(.)(' *+&(	89, 9(' #6'1:	; 9< 9(' #6'1:=02	>?	#$$46.@A;* =BC	#$$46.@D;* =BC	Ä(-26.@A;* =BC	Ä(-26.@D;* =BC
ĀÀ !"Ä#%	Ā+(5	6789	%:8;		:<87	6;84	<787	948:
ĀÀ !"Ä#4	Ā+(5	6789	%:8;		:<87	6;84	<787	948:

#$64)	J$E)	C6.)SF.1M	Ā6'04$E	C-1(T(4$162+	Ā6'9< =6.: E:@:?	J(0': 9< =&)6?
CT(,+ (#+	<	%4	%<G777	96:	78;4	6

23""4 5 67, 8749+,

Ā#$%&'f+%,-	./01	21034 *#5-	67+1 81&'+#3/*%0,-	9 73#5:	; <753#3/	=#>34 *#5-	À1#:43 *#5-
ĀÀ !!!	"#$%&$'	(	))Ā	*+,- /	0	()	()
					1	(!	( )

Ā?Ā9<@A9B?AC7D@EB<ADC

#$%&$'(')	* $+),	-./,(	01(23('45 7Ā89	: ;-	:#Ā	<$)(,
ĀÀ !"#$!%Ā!À()*#	+,-	.	, -	/01	//023	

BEF 4GEEB@H

#$%&$'(')	=3/')>)5	Ā%&, ?/4.	Ā%&, @$)/+
4*55Ā67%'	0	328	/32,
9(:5#))(# /	/	0020	0020
9(:5#))(# 0	/	0-2,	0-2,
9(:5#))(# .	/	0020	0020
9(:5#))(# +	/	0-2,	0-2,
0+; <#%')=(#: #	/	- 2l	- 2l
/0-; <#%')=(#: #	/	/ 2,	/ 2,
<("%À			/->2+

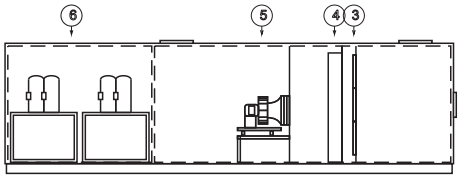

Ä !" #$%&

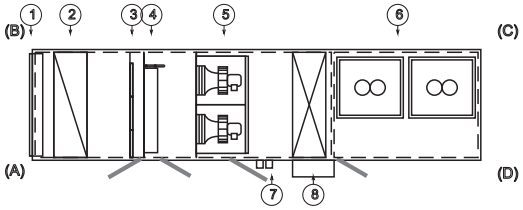

'( ) #$%&

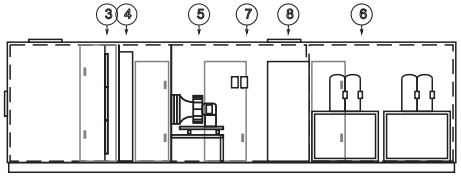

*+,)- #$%&

Ã$/0$ Ä !.+
1@A%-B+) $+ > C'%+
7@AB-:$>% $+ > C'%+
3@A4C %+# < :B"(D $+ *$(-%+
?@AE ! ,,($). !,$(
6@AB"(D *)FC,-,+ ::%CÄ(D
;@A!" .%> &:G' +%*+$.%+ -$,) :D:-%C
2@A*>H
<@A(%!-+$! (F!,)-+,(')%(

,Ä)&-!+
,'%+ -$). &%$.G-0 198799(Ä:
:G$"$). & %$.G-0 198799(Ä:

ÃÄ !Ä" $% &'"()!*+
!./0 1234
!.50 674

'( ) #$%&

Ã$" Ä" , Ä)&-!.+
0 38969(Ä:
Ä018;<9 (Ä:
!0 18=19(Ä:
>038?;9 (Ä:

>%:!+$'-$,) B)$- >%:$.) ,#%+#$%&	- . GBI1	+%#$:$,))BCÄ%+	> -% 97F7;F7976
J,Ä) C% CKLMHNOPQRNSNTMQRGKVP>MHQRMWQ		J,Ä) BCÄ%+ SRNXI2312	%).$)%%+ >>

Innovent

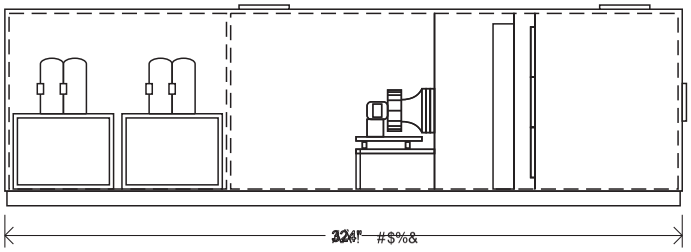

ĀÀ ! Ā#$%&'#(&'	
-12345	6789 : ;8
.32<=>1	?;8 9 : @8
A3BBCD	?;8 9 : @8

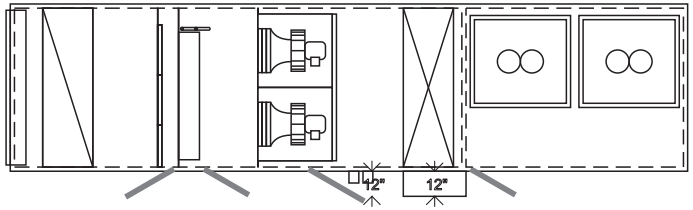

'(Ā) #$%&

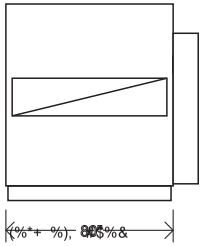

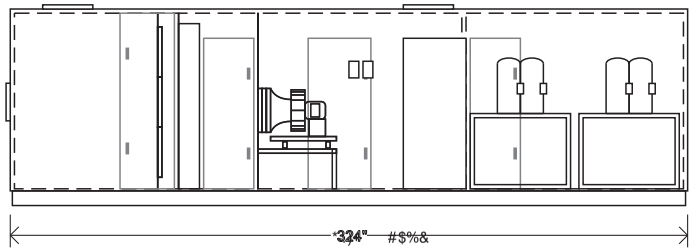

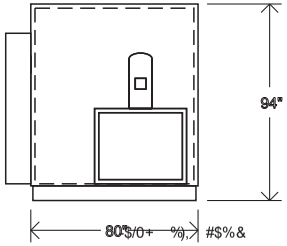

,%A -$'+$.) ,$E%)A$.)A	+Ā/ Ā0FG6	-%#A.))FEĀ%-	,Ā+% H?I?@I?H?J
K.Ā) ĀE% EL>=<M5E 124MBMC=21N14LO1,=<24=P2		K.Ā) FEĀ%- B4MQG:R6:	%)/$)%%- ,,

Innovent

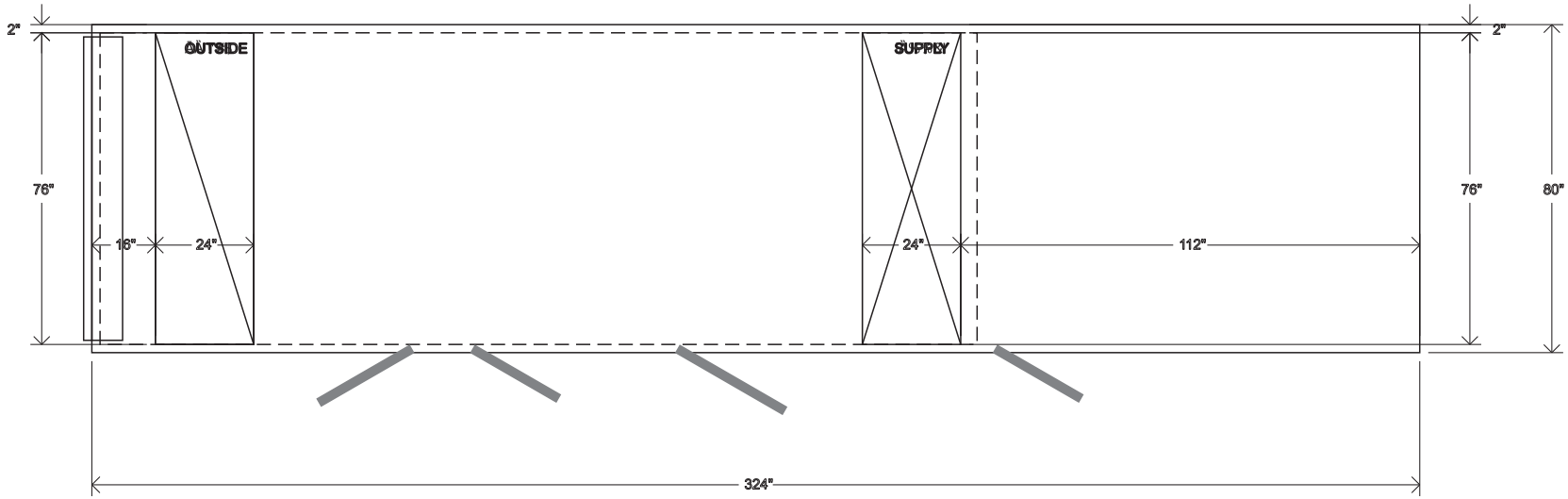

#$!()"% "Ā* #À((Ā**$("Ā*! , %&-*	-. -/À,0	)$1"!"Ā* *À23$)	#- $ 4565765458	Innovent
9Ā3 * -2$ 2:;<=>? 2 @AB>C>D!@E?@B:F@<=AB<GA		9Ā3 * À23$) CB>H,IJ0I	$*."*$$) ##	

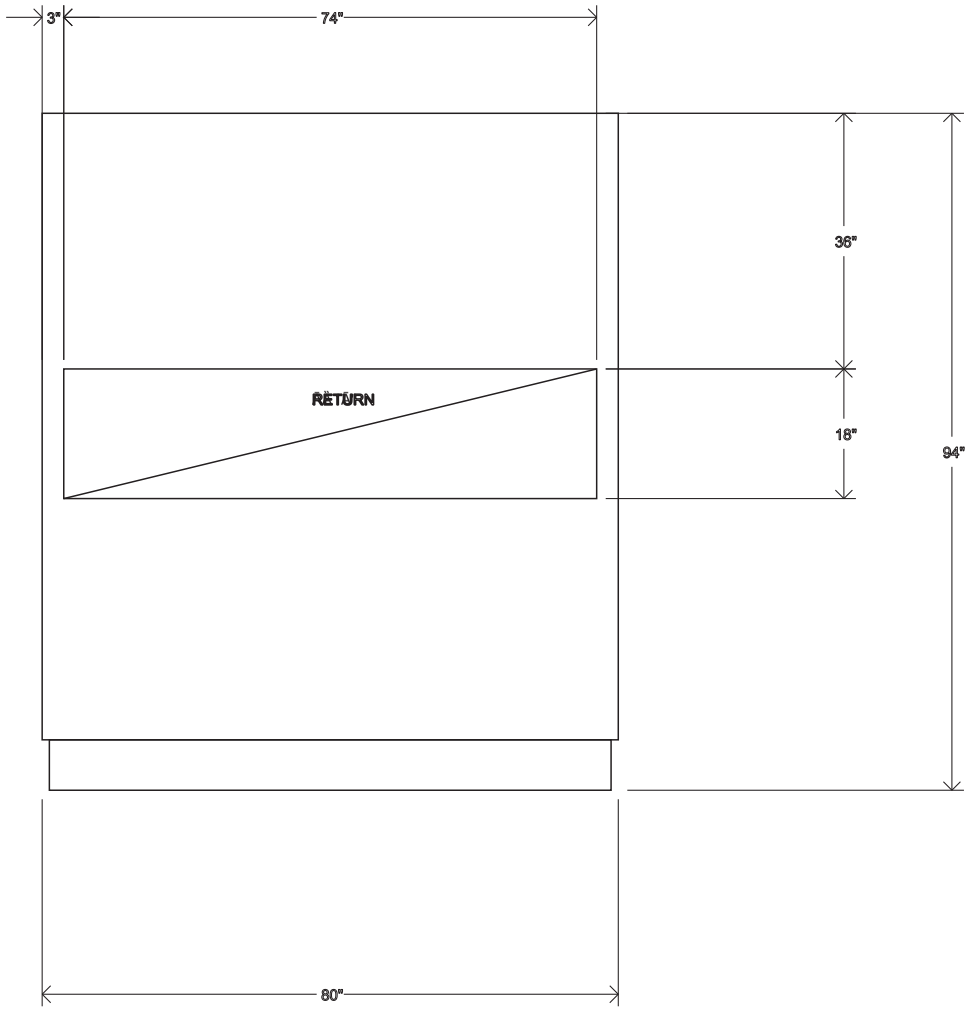

#Ä$%Ä&' &(" #!% %(""Ä% &("$ * +Ä, Ä"#	-. -/!*0	ÃÃ1&$&(" "!23ÄÃ	#- Ä 4565765458	Innovent
9(3 " -2Ä 2:;<=>? 2 @AB>C>D$@E@B:F@=AB<GA		9(3 " !23ÄÃ CB>H*IJ0I	Ä".&"ÄÃÃ ##	

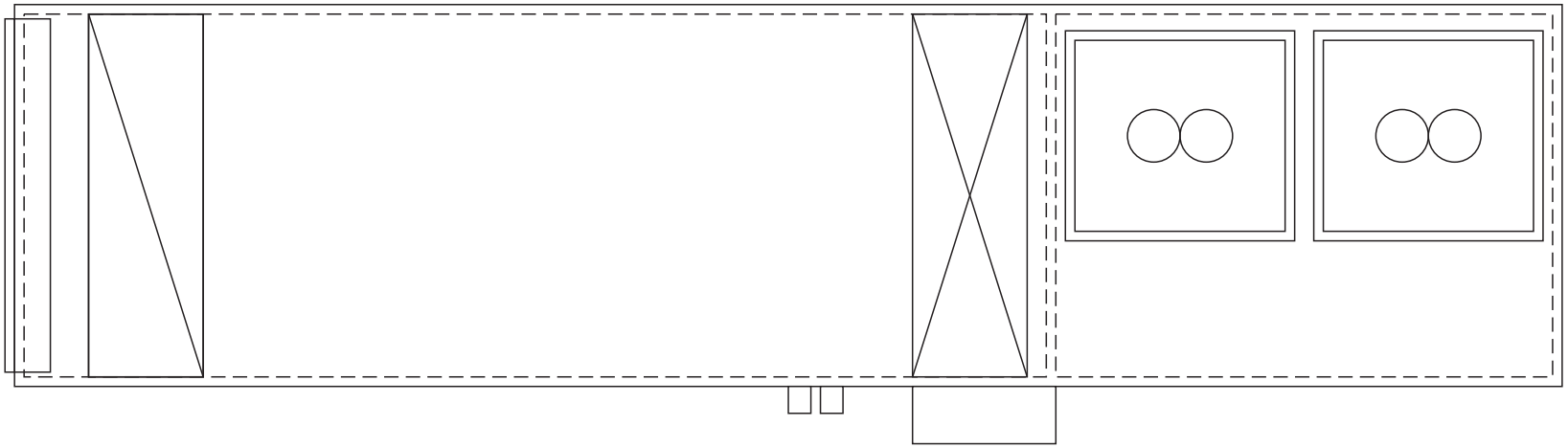

ĀÀ !"#À$"# #&$'" ()$*! (+!)!#,
!#,Ä (,! (, ,Ä ! $- #.) Ä,,(/0 1$+
!2(3, 4Ä !"#Ä$"#5 3$"#./, -(3,$+60

Ā789:;<=;>? @=;A;=B9>??79=;>?8 C<AD?	=DE DF@CG	:7H;8;>? ?@IJ7:	ĀD=7 KLMLNMLKLO
P>J ? DI7 I(4Ä#$" I !,+$Q$/Ä,("8!'!+(R! ĀÄ#,+Ä3,		P>J ? @IJ7: Q+$SCTUGT	7?E;?77: ĀĀ

Innovent

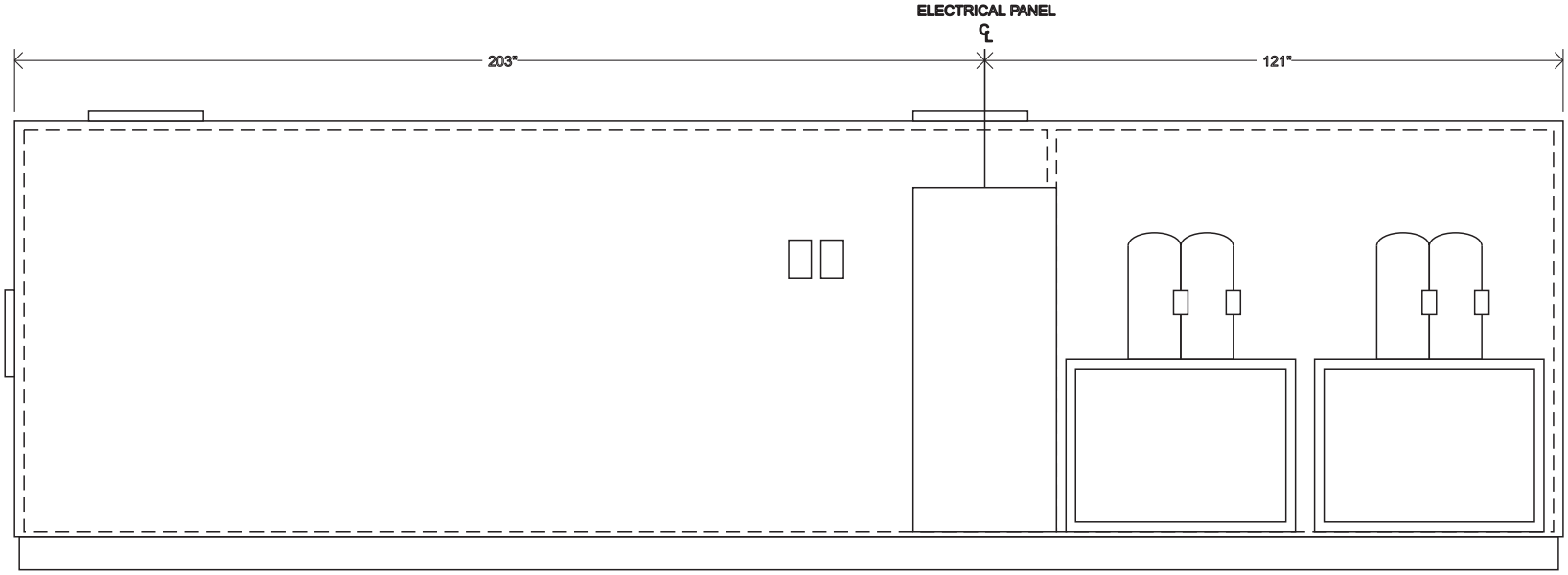

ĀĀ !"#À$"# #&$'" ()$*! (+!)!#,
!#,Ä (,! (, ,Ä ! $- #.) Ä,,(/0 1$+
!2(3, 4Ä !"#Ä$"#5 3$"#./, -(3,$+60

Ā789:;<=;>? @=;A;=B9>??79=;>?8 C1:>?=	=DE DF@CG	:7H;8;>? ?@IJ7:	ĀD=7 KLMLNMLKLO
P>J ?DI7 I(4Ä#$" I !,+$Q$/Ä,("8!'!+(R! ĀÄ#,+Ä3,		P>J ?@IJ7: Q+$SCTUGT	7?E;?77: ĀĀ

Innovent

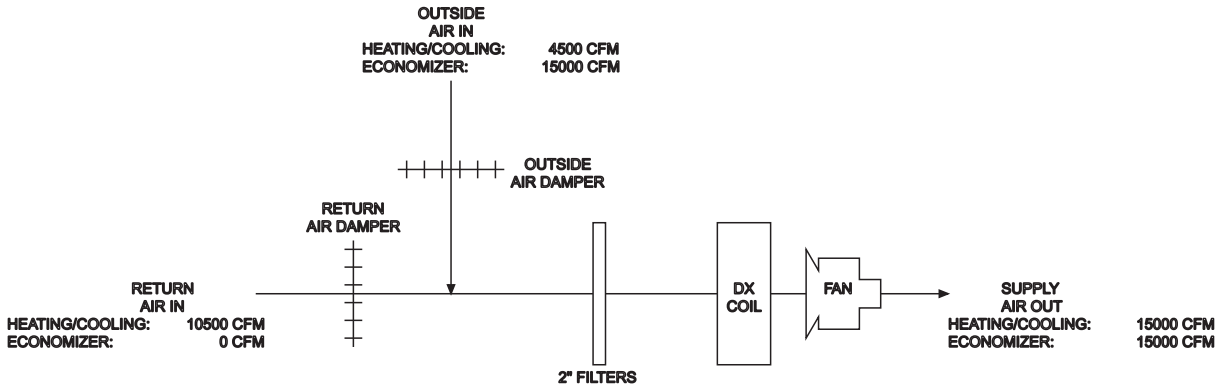

ĀĀ !"#$%#&' (#")*&+ !-Ā.(%#!	%(/ (-012	"Ā3# #&' '0.4Ā"	Ā(%Ā 5676876569
:&4 ' (.Ā .;<=>?@ . ABC?D?E=BFC@ABC;GAĀ=>BC=HB		:&4 ' 0.4Ā" DC?I1JK2J	Ā'/#'ĀĀ" ĀĀ

Innovent

ĀÀ ! #$À% &'%%!&(À'%

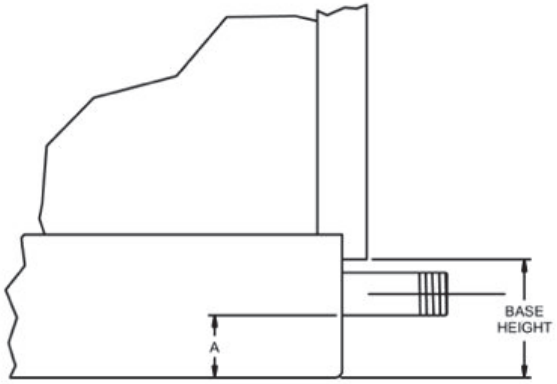

)'((* #$À% &'%%!&(À'%

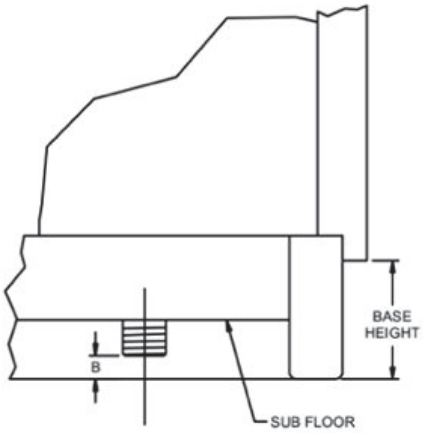

#$À%	#$À% ĀÀ+!,*-(.	)$Ā! /ÀĀ0$1 2!À32(	4$4
(3	4 4156	76	428996

ĀÀ !" $!%!$ Ā &Ā' ($)*'Ā+ Ā (! !$,'Ā! *-! -!$. ĀĀĀ!. 'ĀĀ '/ -$Ā&+- 0Ā Ā,)Ā(1Ā$ /'(! Ā%&Ā' 2

#!&'**!% ! #$À% (#$- !ĀÀ3%
,(#$-)> '(2!#Ā.

-'ĀÀ(À/! -#!ĀĀ0#! (#$-6
,)1'7 (2#0 5$%.

%!3$(À/! -#!ĀĀ0#! (#$-6
, #$7 (2#0 5$%.

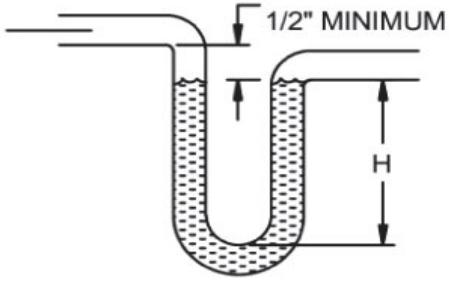

5$% ' 55

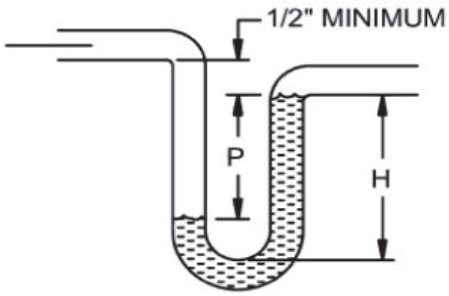

5$% ' %

- 8 - 'ĀÀ(À/! 5$% -#!ĀĀ0#! ,4 79&9.
2 8 - : ,;<=4* Ā%Ā*0*.

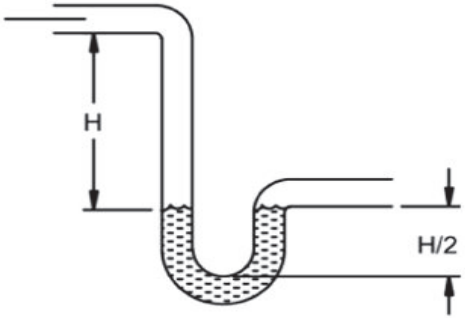

5$% ' 55

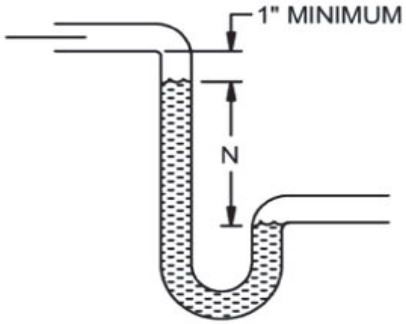

5$% ' %

%8 %!3$(À/! 5$% -#!ĀĀ0#! ,4 79&9.
2 8 % : , ; 4 * Ā%Ā 0 * .

:ĀĀ !") . ĀĀ/!$;) ';! , ! -Ā(Ā % $)< - !'+- (!/'+Ā '/ Ā /! Ā= /<)Ā(<= /< > /<= Ā)? /) '. <$!//&$!@

(!/.$'< 'ĀĀ ($)'Ā $)< (!)'?	)+)-&A4	$!;'/'ĀĀ Ā&,0!$	() ! BC1CD1CBCE	Innovent
FĀ0 Ā),! ,GHIJKL , MNOKPKQMRSLMOGSNUNOITN		FĀ0 Ā&,0!$ POKUA7847	!Ā+'Ā!!$ ((	

ĀÀ Ä"#$%	ĀÀ Ä&'()
ĀÀ !" $ %&!'	ĀÄÄ!" $ (%!'

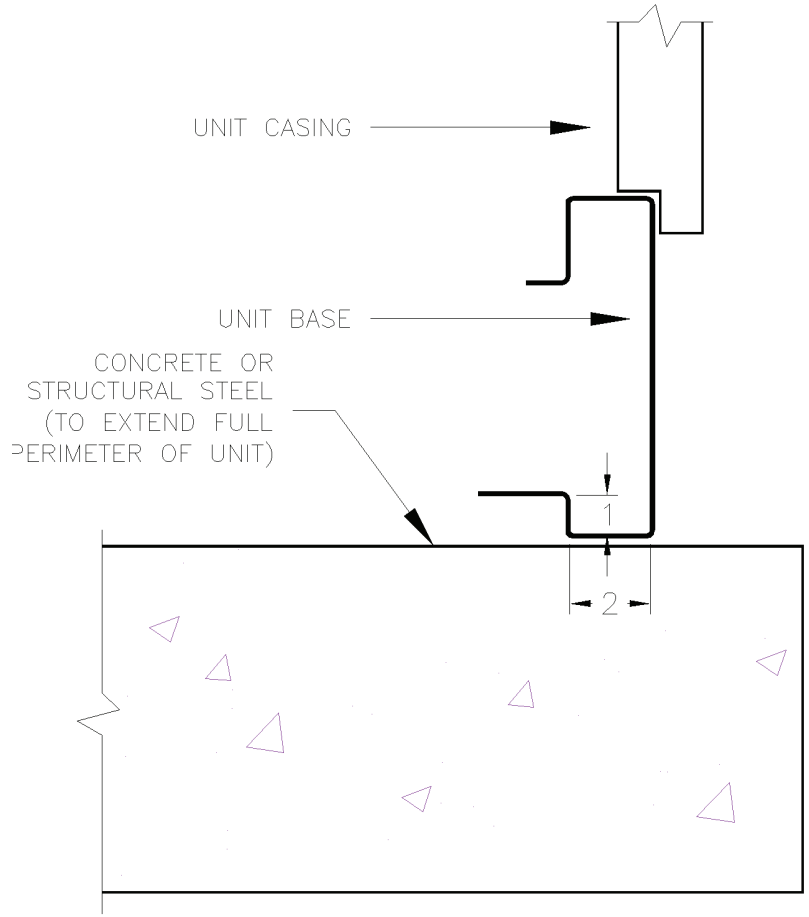

)*+,-./0.12 34+*)*04."	045 46789	-*:.+.12 27;3*-	)40* &Ä<Ä=<Ä&Ä>
?13 24;* ;@ABCDE FGHDIDJBCGHBMG		?13 27;3*- IHDN8(Ā9(	*25.2**-))

Innovent

ÃÄ !" $!Ã$Ä%$ &' '%! $&())!*
+ÄÄ$! 'Ã* (Ã$ '++!* (Ã &! ,(!+*
-. À &!%$"

'(/$)'

+!0!Ã*"

'(/ ' Ã'+À0 (Ã)1
*(/ * (0('+ (Ã)1

2+ / 2 À(+ +!'3(Ã0
! ' / !6&'1$ '(%
&6+ / ,+') +' ! &!'
!62&'Ã0!% +!'3(Ã0
&5+ / &!' 5&!!+ +!'3(Ã0
%' / %! 1%Ã '(%
%* / %! 1%Ã *12
$)' / $)'2!
$' / $ 1))+. '(%
$* / $ 1))+. *12

',4$ / ' (%,+À5 4ÀÃ(À%(Ã0
2 À7 / 2 '%-ÀÃ * (À6(*! $!Ã$À%
*)$ / *(,,!%!Ã ('+)%!$$1%! $!Ã$À%
*)$5 / * (,,!%!Ã ('+)%!$$1%! $5(2&
*$) / *12 $ ' (2) %!$$1%! $ 5(2&
& / &14(*(. $!Ã$À%
%*$ / %À ' (ÀÃ * ! !2 (ÀÃ $!Ã$À%
/ !4)!%' 1%! $!Ã$À%
& / !4)!%' 1%! 8 &14(*(. $!Ã$À%
$* / $ 4À9! *! !2 À%

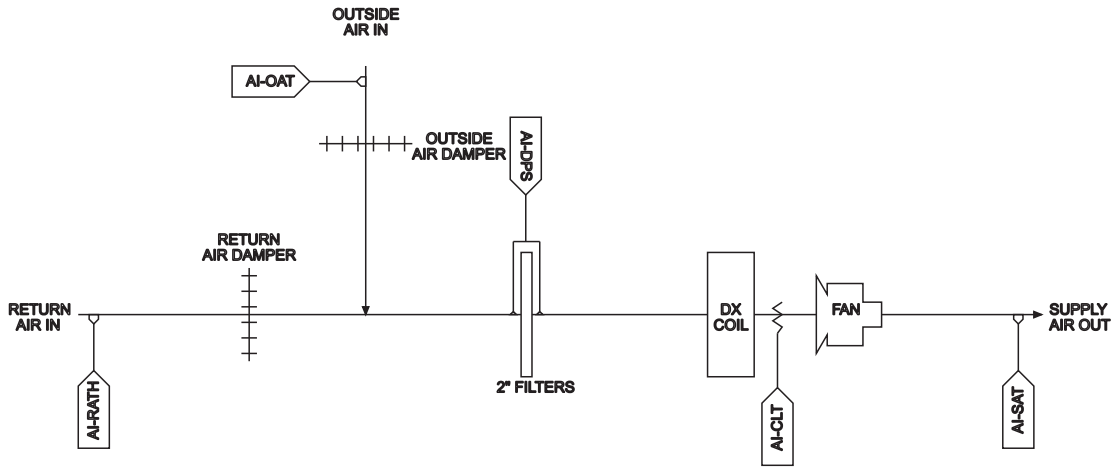

ÃÄ !"#$%#&' Ä' &" !)Ä*+%#!	%+, +)-./	"Ã0# #&' '-*1Ä"	Ã+%Ä 2343543236
7&1 ' +*Ä *89:;<= * >?@<A<B:?8G>@8D>Ã:;?@:E?		7&1 ' -*1Ä" A@<F.GH/G	Ä',#'ÄÄ" ÃÃ

Innovent

Reference Info:

- Project Name: Madison Metropolitan Sewerage District
- Project Location: Madison
- Unit Type: C-Series
- Unit Tags: AHU-1

Control Application Summary:

- This C-Series unit is a heat/cool air handling unit. Key components include; supply fan, a/r coil (cooling and heating), no supplemental heating (heating), and a unit controller.
- The unit controller provides control of temperature, ventilation, as well as, unit status, component safeties, alarm and diagnostic information.
- The unit supply temperature set point is reset up and down based on space temperature. The supply fan provides a constant air volume set through the unit controller.
- This unit contains a system utilizing a refrigerant classified by ASHRAE 34 as an A2L. In accordance with UL standard 60335-2-40, the unit includes a refrigerant leak mitigation control sequence to provide the required airflow in the event of a leak detected within the air tunnel. This control will override any mode of operation with the only exception being building fire and smoke function(s).

Operating States

Occupied

- Supply Fan on, 100% balanced airflow.
- Economizer enabled.
- Heating enabled.
- Cooling enabled.
- All dampers are enabled.

Supply Fan Control

- The supply fan variable speed function shall be used for manual field balancing only.

Refrigerant Leak Mitigation Safety Control

- Upon detection of a refrigerant leak, the following safety measures shall be executed:
  - Fan(s) enabled
  - Compressor(s) disabled
  - Ignition source(s) disabled
  - Activate an alarm, available to the building, if additional safety measure(s) are required

Operating Modes

Heating

- Heating Mode: The a/r coil (heat pump) is controlled to maintain the supply temperature set point.
- Heating Lockout: Heating function will be locked out when the outside air is > 75°F, adjustable.

Cooling

- Economizer Mode: The economizer (modulating outside air/recirculation air type) and the a/r coil are controlled to maintain the supply temperature set point. The economizer, if available, will be used as the first stage of cooling.
  - Outside air temperature < supply air temperature set point:
    - The outside air and recirculating dampers inversely modulate (increasing/decreasing the outside airflow) to maintain the supply temperature set point.
    - Each damper has an adjustable minimum & maximum position (field balanced by others) that it will modulate between.
  - Outside air temperature < space air temperature -2°F AND outside air temperature > supply air temperature set point:
    - The outside air and recirculating dampers inversely modulate to 100% OA and 0% recirc air
    - Mechanical cooling may be required to maintain the supply temperature set point
  - Outside air temperature > space air temperature:
    - Outdoor damper at minimum position and recirculating damper at maximum position.
    - Mechanical cooling required.
- Cooling Mode: Cooling function is controlled to maintain the unit supply temperature set point.
- Cooling Lockout: Cooling function will be locked out when the outside air is < 50°F, adjustable.

Supply Temperature Set Point

- The unit controller will reset the supply temperature set point up & down between the values listed below to maintain the space temperature set point.
    - Space Temperature Set Point Heating Mode ##°F, adjustable.
    - Supply heating minimum set point: 55°F, adjustable.
    - Supply heating maximum set point: 95°F, adjustable.
- Space Temperature Set Point Cooling Mode ##°F, adjustable.
    - Supply cooling minimum set point: 50°F, adjustable.
    - Supply cooling maximum set point: 70°F, adjustable.

Non-Shutdown Safeties

Filter Pressure Transducer(s)

- If the filter differential pressure rises above the adjustable set point, the unit controller shall activate an alarm.

Unit Shutdown Safeties

Supply Temperature Low Limit

- If the unit supply temperature drops below 35°F (adjustable), the unit controller shall shut down the unit after an adjustable time delay.

Supply Temperature High Limit

- If the unit supply temperature rises above 120°F (adjustable), the unit controller shall shut down the unit after an adjustable time delay.

Smoke Detector(s)

- Return and/or supply smoke detector(s), provided, installed and field wired in series, by others. Upon detecting smoke, the smoke detector(s) shall send a single binary signal to the unit controller to immediately shut down the unit.

Sequence Required Sensors

Analog (Factory)

- Supply Air Temperature
- Outside Air Temperature
- Return Air Temperature
- Space Air Temperature
- A/R Coil (Heat Pump) Leaving Air Temperature
- Filter Pressure Sensor

Digital (Factory)

- Supply Fan Status
- Water Flow Proving Switch
- Phase/Voltage Protection Relay
- Refrigerant Leak Detection Monitoring

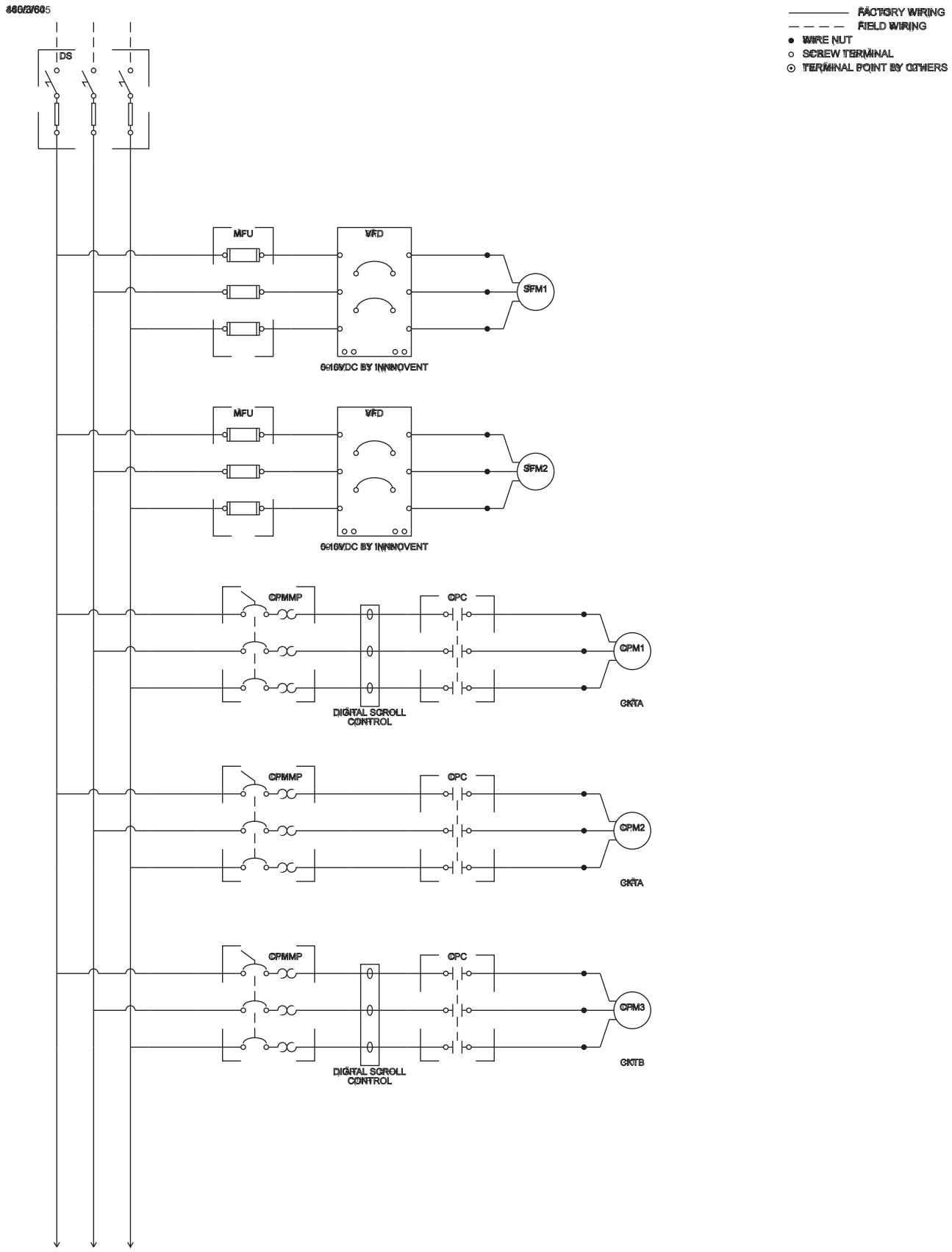

,*. #'0!'"(0"&*# * +* !#' Ä+ . 2*/Ä!'	!Ä) Ä2-9:	#"8'."((-/1*#	,Ä!* 5;6;46;5;=	Innovent
>"1 (Ä/* /?@ABCD EFGCHCIAEJBG?KE,ABFGALF		>"1 (-/1*# HGCM9N7:N	*()'(**# ,,	

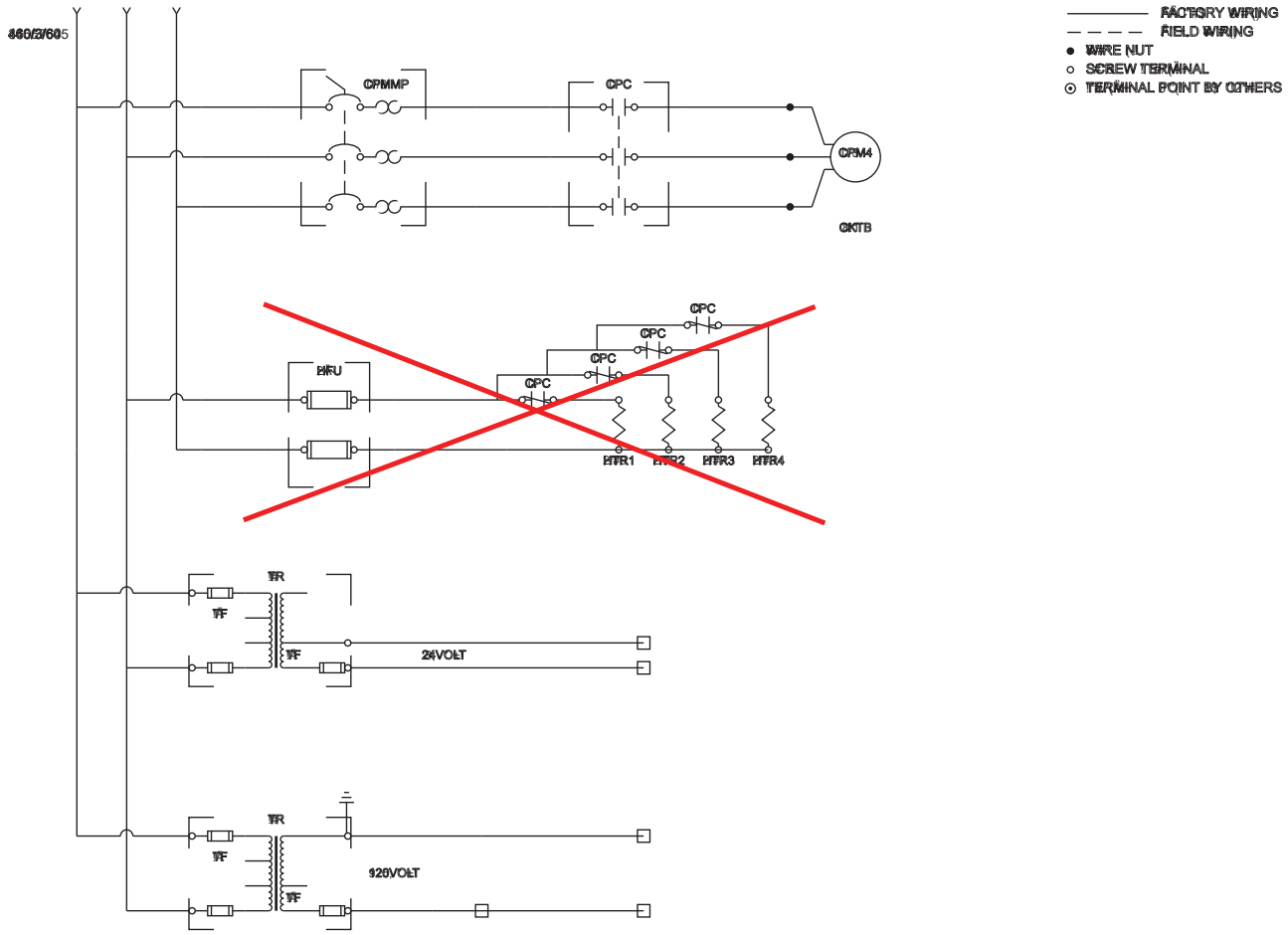

,*. #'0!'"(0"&*# * +* !#' Ä+ . 2*/Ä!'	!Ä) Ä2-< 9	#"; '."((-/1*#	,Ä!* 5:6:46:5:=
>"1 (Ä/* /?@ABCD EFGCHCIAEJBG?KE,ABFGALF	>"1 (-/1*# HGCNFGN	*()'(**# ,,	Innovent

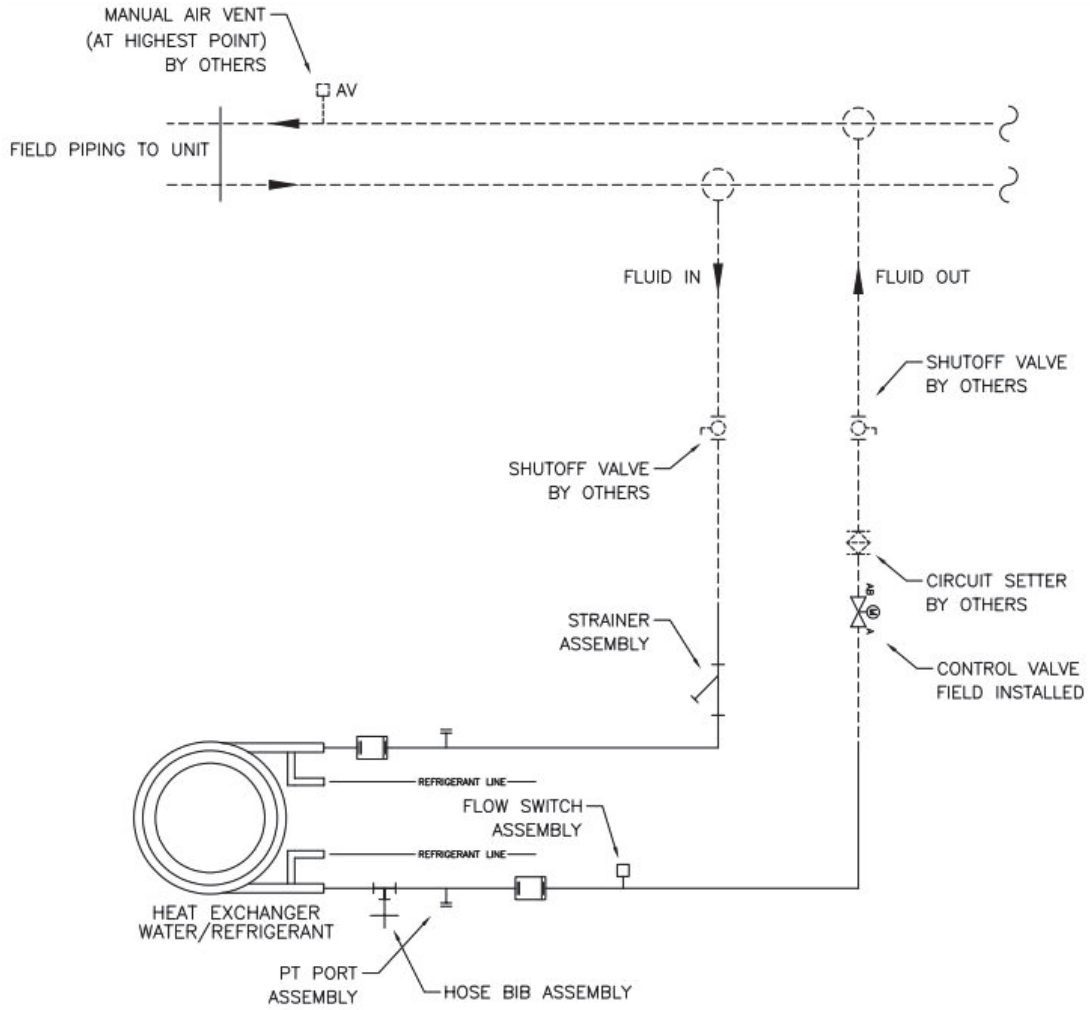

ĀĀ !Ā"	
ĀĀĀ ! #$%	&'()*
+,-. /,01	23 ĀĀ4.5+
% Ā.5, !	23 ĀĀ4.5+

#$"#%$&	
6Ā3	7
#$%	*()8
+,-. /,01	9
% Ā.5, !	+Ā..!
:,.!.;Ā5,; 5.6<:	0 Ā

ĀĀ & Ā(#Ā)*Ā"	
;Ā00.;Ā,Ā0 +,-. /,01	9
;Ā00.;Ā,Ā0 % Ā.5, !	; Ā$$.5
;Ā00.;Ā,Ā0 Ā3$.	+=Ā
:,.!.;Ā5,; 5.6<:	3.+

#+)&"+, - ,-Ā	
;Ā00.;Ā,Ā0 +,-. /,01	7
;Ā00.;Ā,Ā0 Ā3$.	7>= 3
?0,Ā0 Ā3$.	#5@ ; $!5 A $Ā $Ā5Ā+

./01+, , Ā*Ā)!
BALL VALVE
STRAINER
THRDxTHRD ADPTR/DIELEC
THRDxGRV ADPTR/DIELEC
REDUCER
AUTO BALANCING VALVE
MANUAL BALANCING VALVE
TEE
DRAIN
UNION
2–WAY CONTROL VALVE
3–WAY CONTROL VALVE
PT PORT

)+&Ā.
• +Ā!,: ! ,0.+ :.+,#0 Ā. B ;ĀĀ53 $,$,0#
• : +4.: !,0.+ : .+,#0 Ā. B,.!: $,$,0#
• = Ā.5 $,$,0# +4,$+ =,Ā4Ā?Ā ,0+?! Ā,Ā0) !! = Ā.5 $,$,0# ,0+?! Ā,Ā0 %?+Ā 2. ,0+Ā !!.: 23 ,0+Ā !!,0# ;Ā0Ā5 ;ĀĀ5 BĀ.5 B,0 ! = Ā.5 2 ! 0;,0# 0: Ā.+Ā Ā?Ā
• % C,%?% !!Ā= 2!. 0 Ā0>+4Ā;D $5.++?5. E &F($+,

:.+;5,$Ā,Ā0 = Ā.5 $,$,0# +;4.% Ā,;	Ā # 4?>&	5.@,+,Ā0 0?%2.5	: Ā. (7G7HG7(7F
IĀ2 0 %. %JKLMNOPQRNSNTUVPRJVPLMQRLWQ		IĀ2 0 ?%2.5 SRNX>Y9&Y	.0#,0..5 ::

Innovent

*1%'1,%2

Q!"#0++0#' !*"'/!*, 9$ Q!"#0++0#' ! 0 &!&$*#* 50,

: &0#' !(Q!, $

Ā0<'!*# =*9+*&#' !( ) 0++0!, $ 9 '!&+%,'!/ 9$08*G: A4T.0#K'!1H1/

Ā0"'!/ U'$: *0B0/*(@;UĀVU ,%&#+*0B0/* &+0"" N=:ĀO$0#'!/ T1.

U& %"#'&Ā0#'!/(F0!*+ '!"*$#' ! +"" 5*$ &#0D*<0!, "30++# <* +*"" #30 #3* 9 ++ H'!/(

E$*X%*!&7N$MO	-..	-4T	4T.	T..	-G...	4G...	YG...	KG...
Q!"*$#' ! +"" NZO	4Y	->	?.	?4	??	?Y	>?	>.

R3*$80+F*$9 $80!&*( )0++"G9+ $G0!, &*'+'!/ WCD0+%9 >1?C[1- 5*$ '!1

#Ā$%

Ā !"#$%&#' !( )*+,*, -. /01 "#**+2 0!, Ā &30!!*+"

Ā 0#'!/(4 50$#5 67 5$'8*$ 0!, %$*#30!*8 ,'9'*, *!08*+ # 5 &0#

:'9#'!/ :%/"(; %!#*, # %!'#<0"*

=$0'!0/*( )**5 3 +*" '! <0"* &30!!*+"

&'Ā(%

Ā !"#$%&#' !(>.>? "#$%&#%$%8'!%8#%<*

@*0+"(?A->'!1 #3'&B&+ "*,C&*+5 +7D'!7+908 /0"B*#

&)**'

E+ $ F0!*+"(4 '!1 #3'&B3%<+*CH0+9G8C'!I*&#*, 9+ $ 50!*+"

)0+BCJ! ; 0#*$'0+(K /01 2 L. /0+D0!'M*, "#**+N*65 "*, # 0'$"#$*08O

P!,*$;0#*$'0+(44 / 012L. /0+D0!'M*, "#**+N! #*65 "*, # 0'$"#$*08O

Q!"#0++0#' !E0"#*!*$C9$**, *"'/!G 50!*+*, 9+ $ < !,*, # #3* %!'#<0"* H'#30 "#$%&#%$%3*"'D*

@*0+"(@*08" 9!"'3*, H'#30! 0,3*"'D* "*0+0!# 5$ D','!/ 0 H0#*$C#'/39+ $

=$0'!"(- '!1 ; FR 9+ $,$0'! &!!*&#' ! 5$ D',*, '!)@SF D*"#'<%+**&#' !

F*!*#$0#' !"(- '!1 +'50$ %!, 0+9+ $5*!*#$0#' !"

=%&#5*'!1/"( )0+BC ! / $0#'!/ D*$ 0+9&&*"'<+* 9+ $C 8 %!#* ,%&#'&0#' !

Ā$$ Ā&' ()*$*&+ , Ā&)$

À !"# $%&"'( )!* +,)-. /012#"34 ##)!5"-+"/ 6)0 7

8!91# +)0!'( )!* +,)-. &0#%1:"+, !")!5"-+"/ 60 7; <3= #1" >)!91# +)0!0!#%?06@*A3B&C:)!*; 4 ##9;-")#)!D; 6#00:9

EF+":)0:G +":) #' ((D * HIJ D #= !)K"/ 9+""#

8!+":)0: G +":) #' ((D * HIJ D#= !)K"/ 9+""#

$,":7 # L:" .' $,":7 ##%32:0."! - 9)!D !/ 6: 7")! --0:/ !-" 4)+, MN<8 CAOJPL3C

Ā(()-- '../-

P0!9+:1-+)0!' Q0 73)!5"-+"/ /012#"34 ##/00:9 4)+,)!91# +)0! &:0&":+)"9 !/ 7 +":) #9 7 +-,)!D +;")!!":R01+": & !"#9; #17)!17 6: 7"; 61##3,")D,9+)!#"99 9+""#,)!D"9

N :/4 :"' L)3/):"-+)0! # -07&:"99)0! #+-,"9 4)+,)!+"D: # :0##":- 7

S" #9' EÀTG +%&"/00: D9."+; MS$G T(JJJ

~~8!+"D: +)0! <)! D1++":8&:0=)/"/ 0=": --"99 /00:9 +, + :" !0+ +." 61##;")D,+ 06+," 1!)+ - 9)!D 0! 01+/00: 1!)+9~~

U0-.)!D G"-, !)97' N"F ."% +00#"/ --"99

T00: N !/#" 8+":#0-.' 8-#1/"/ 0! ##/00:9 >"F-"&+ 9)/" --"99 6)#+"/00:9?

+Ā)4Ā.%5 &%-&'.%&Ā / '#0

#$%&$'%(

À !"#$%&'!()* + ,+"# +-(")$! .!(* /)*0+"! 1),)$)+ *)+ "$1 0 $1 $(/"+/"'(! /)*02 (3"(4 5-0)+-()+ /)"26,2"'1 () +,+"# +-$(/)"26/)*0+ !!)+!6 - $1 70-$!")$ 1 5"/ !

8 !("$#%9 ,+"# +-(")$! .!(* / 4-+# 1 3"(4 + ,+"# +-$(-$1 ,'22. +'$ (! (1 - ((4 ,-/()+. 0+")+() !4"0* $(

)#*+&%,,#&,

&"+/"'(: &)*0+ !!)+ 8.0 % &)0 2-$1 À"#"(-2!/+)22(-$1 * ! (6 ;<=:<<> ('+$1)3$ 3 "(4 ,-/()+.=3"+ 1 *)1'2-(")$ /)$(+)22 +6+ 5 +! +)(-(")$ 0+)(/(")$6 !"#4(#2-!! 3 "(4*)"!('+ "$1"/-()+6 /+-$?/-! 4 -(+6 +@@ +"!)2-()+!

&"+/"'(; &)*0+ !!)+ 8.0 % &)0 2-$1 À"#"(-2!/+)22(-$1 * ! (6 ;<=:<<> ('+$1)3$ 3 "(4 ,-/()+.=3"+ 1 *)1'2-(")$ /)$(+)22 +6+ 5 +! +)(-(")$ 0+)(/(")$6 !"#4(#2-!! 3 "(4*)"!('+ "$1"/-()+6 /+-$?/-! 4 -(+6 +@@ +"!)2-()+!

&%-&'.%&Ā /'#0 ,+%)'Ā2 / '%,

&"+/"'(: A70-$!")$ À 5"/ % 84 +*-2 70-$!")$ 5-25 BCDE

&"+/"'(; A70-$!")$ À 5"/ % 84 +*-2 70-$!")$ 5-25 BCDE

F+ !!'+ G3"(/4 !% H-$'-2 +! (4"#4 0+ !!'+ !3"(/46 - '() +! (2)3 0+ ! !'+ !3"(/4

G)2 $)"1 5-25 !%I$/2'1 1)$ 2"J'"1 2$ B)+ DKÀ /"+/"'(!6 (4 AAD 3 "22/ (- ! (4 !)2 $)"1 5-25 E

F+ !!'+ 8+-$!1'/ +!% I$/2'1 1)$!'/(")$6 1"!/4-+# 6 -$1 2"J'"1 2"$!

8 *0 +-('+ G $!)+!% I$/2'1 1)$!'/(")$ -$1 1"!/4-+# 2"$!

G/4+-1 + D-25 %I$/2'1 1)$!'/(")$L1"!/4-+# L2"J'"1 2$!

K"2(+À+" +%I$/2'1 1)$ 2"J'"1 2$

#$ %& () *+#*%,+*Ā-(.)%$

Ä !"#$%&'()"(* +',-* .(** /,- 0'"*

1(0/'23 .(/ 2 4"4"$#%&$$'6 $/ ."** 42'6"+ ($ "$* / !/2("$ 27 8'. ! ."/0 9 ($+ :;< 4'2/! (//(09 + /' (09 8*,"+/' 282"# 2($/ 0'"* =$ 42'6"+ + 82 (09 0"20,"/>?@' (++"/'"$(* .(/ 2 4"4"$#"! 4 28'2A + (/ /9 8(0/'23?

1" *+ . (/ 2 4"4"$#%9 "$!/(**"$#0'$/2(0/'2 ."** $ + /' 42'6"+ ($+ "$!/(** /9 A("$ 9 (+ 27 0"20,"/4"4"$#7($+ (**.(/ 2 4"4"$#! 4 0"(*/" ! 2B,"2 + 8'2 8,$0/'"$(* '4 2(/'"$? C$3 8' *+ "$!/(** + . (/ 2 4"4"$#A,!/ - "$!,*(/ + "$ /9 8" *+- 3 /9 "$!/(**"$#0'$/2(0/'2 (8/ 2 8'$(* .(/ 2 -(*($0"$# ($+ / !/ ', /?

1" *+ &'$$ 0/'"$ <34 %D 8 2 /' E(/ 2 : "4"$#F09 A(/"0 8'2 0"20,"/*"$! "G 42'6"+ + -3 5$$'6 $/ 8'2 0'A4* /'"$ ' 88' *+ 4"4"$#-3 '/9 2!?

H3+2'$"0 F3!/ A 5$/ #2(/'"$% IJ.(3 . (/ 2 2 #,*(/"$# 6(*6 8'2 9 (+ 42 !! ,2 0'$/2'* 82 (09 282"# 2($/ 0"20,"/42'6"+ + -3 5$$'6 $/ ($+ 8' *+ "$!/(** + - 3 '/9 2!?

+/ Ā0)*Ā ( )* .)%$

& 2/"8"0(/'"$%< !/ + "$ (00'2+($0 ."/9 CHD5KLM

<,- Ä"(A / 2% L;I "$?0'44 2

<,- <9"0N$!!%M?MIN'$?

1"$ O(/ 2"(*%C*,A"$,A

1"$ <9"0N$!!%M?MMN$?

&'"* &(!"$#%LQ#(? #(*6($"G + !/ *

&'"* &'(/"$#% @'$

Ä2("$: ($ &'$!/2,0/'"$% RMK /("$* !! !/ * +',-* J!*'4 + +2("$ 4($)/ $+"$# (A "$"A,A '8 LI "$?4(!/ /9 0'"* 8(0 ."/9 .(*NJ'$! /3* !,44'2/!7 I "$? 8! 42(3 8'(A "$!,*(/'"$ '$ /9 ,$+ 2!"+ '8 /9 +2("$ 4($7 0',$/ 2!,$N +2("$. "/9 8(0/'23 4"4"$#/92',#9 /9 ,$"/ -(!

+ 442 5 3Ā*

#$%&$'%(

Ā !"# $%"&'&( )&"!*'$+

Ā,-'.(/01

2'&%3#3$ %3,!(55'67.8 / Ā2/ $'&%3#3#,& 3&9'&#,&6 !$' :;<=> !- 5,"!- 9'&#,&6 !$' :?==>

0'&#,&6 !$'(4 ! @'".5 5% %3$ ..8- -8! 63$ ..8 7 . !$'- %) AB?9'& / CDE D;B<F

)#*+,&),'#*

1'53G!(H!*,"5'-I -3&'$%J-&3&"!"6 # !

L*".(D%3%$*J@'.-'5'K'!J7. -'I 7 $+@ &-J3!$.3!'- 5%". @'". @3%* 9&,%'$%3K' %3!G

4& 6'( ) .K !3M'-I 7,.%'- $,!5%&"$%3,!

-#,#& Ā*/ /&'$%

Ā,%,&(N10I COĀ/ PJ#& 6'I 2. 55 4 35". %'-I Q41J$,69 %37.' 6 ,%,&@3%* 5'&K3$'#$%,& #<B<R

1&3K'(/ 53!G.' K&3 7.' 59"- -&3K'5 3$."-'- 9'& 3!-3K3-" . # ! 6 ,%,&

', ',%0&Ā ,'#*

E5,. %3,!(S.,@'& !- 6,%,& 55'67.8 6 ,"!%'- ,! "!3% &&35,. %3,!7 5' @3%*< 3!B59&3!G5,. %,&5

E!%'&3,&.. 2,!!'$%3,!(2 !K 5 #.'T $,!!'$%'- % #! 7.,$+ , ##@ ..

,-##& Ā'& - Ā./%&

#$%&$'%(

À !"# $%"&'&( )&"!*'$+
À,-'.(/ 01234
5'&#,&6 !$'(7À07 $'&%8#8#& 8&' + 9' !- 8&:'&#,&6 !$' 8 $$,&- !$' ;8%*7À07 <==

)#*+,&),'#*

>& 6'(>,&6'- 9 .? !8@'- A%".
B. -'A(>,&6'- 9 .? !8@'- A%". 4/2A%C.'
D' .A(D% 8!.'AA%". E 6F A' .AGH5I F. -' A' .A
J8!+ 9'(0,!$' .'- 8 E6F
B. -' K&8'!% %8,!K::,A'-
7$%" %,&À ,-". %8!9G8!$."-'-

&%, &* Ā'& -Ā./%&

#$%&$'%(

À !"# $%"&'&( )&"!*'$+
À,-'.(/ 01234
5'&#,&6 !$'(7À07 $'&%8#8#& 8&' + 9' !- 8&:'&#,&6 !$' 8 $$,&- !$' ;8%*7À07 <==

)#*+,&),'#*

>& 6'(>,&6'- 9 .? !8@'- A%".
B. -'A(>,&6'- 9 .? !8@'- A%". 4/2A%C.'
D' .A(D% 8!.'AA%". E 6F A' .AGH5I F. -' A' .A
J8!+ 9'(0,!$' .'- 8 E6F
B. -' K&8'!% %8,!K::,A'-
7$%" %,&À ,-". %8!9G8!$."-'-

& ,,+ - Ā)(,(/*)+ '/(

#$%&'(#')$%

Ä !"#$ %"&' Ä()* +
,-- ..$ /"! 0 1#-2 "&-34! . 5 16"-#37 8.9#: ! .4:;;16. <1 .61 &=69
>"36 ?1 ..41 @1#&.!4- 1.$ A&-34! !
Ä#=& 9 3"- B#4= .$ A&-34! !

#$%&$'%(

Ä !"#$#%&"#'()*
+,-- .&/'! %0'((") -#)" 1 23 & 4&"#'(&--3 5 %'6(#7 1 8)"#(6 9&2'!&"' !3
+:89 9#)"#(6*;9 <==> '! ?@AA>+B+C@

D'E ! Ä'((%"#'(* F#(6- 0'#(" 0'E !

9#(G'-"&6 * C?@HAH?@

FÀÀ5* > I ,

)#*+,&),'#*

J&#(:- %"!#%&D&(-* Ä'("!'-- !)K L0&()#'(2'&!1)K "!&()$'!. !)K $M)#(6K
) !N#%) E#"%O)K&(1 " !.#(&- 2-'%I) .'M(" 1 '(& 2&%I0-&" #()#1 4:J, A5
(%-')M!

P#)%'((%"* QM) 1

R#!#(6*
+,-- E#!#(6#%-M1) (M.2 !#(6 '(2'"O " !.#(&"#'((1) "O&"%!!)0'(1) "' "O
&)+2M#-%K!+%'1 1 E#!#(61#&6!&.
+,-- E#!) &! %-'! %'1 1 0 ! N'-"&6 #("O - %"!#%&0&(-
+,-- E#!) &! %-'! %'1 1 0 ! $M(%"#'$!'. "O " !.#(&- 2-'%I) "' "O (1
1 N#%)
+D'E ! E#!#(6 (%-') 1 #(%(1M#"
+S!'.. ") &(1) &-&(" 0!'N#1 1 &"&--0&(- &(1 2-'%I+'$$0 ("!&"#'() "
0! N (" E#! 1&.&6 &(1 &#!- &I&6

J'"'! D!'" %"#'(* ,-- ('(+GQP %'("!'-- 1 "O! 0O&) .'"'!) #(%-M1) "&!" !
0!'" %"'!) &(1 %'("&%"'!)

$Ā&'Ā-.% 0&%1 %*)2 3&'$%+

GQPJ 'M("#(6* GQP) . 'M(" 1 "' M(#'%&)#(6

FM00-3Q&(GQP*,TT 1!#N 0!'N#1 1K'(0 ! .'"'!

#$%&$'%(

Ä !"#$%&'()*+,-.+*/"0 0 0"#")'1(*$)+*1 ! ,!) 2 "$(130 0 4+ !)'$0-'1* $ *. +')"*$

567 8*223$"(')"*$% 5'($) 9 7:;<

ÀĀ&)(Ā&%

8*$)+*11 +%
-8'+ 1 (=.8> (*$)+*11 +$0 ?.'$!"*$ @*'+0! $ 0 0)* !3..*+) !)'$0-'1* $ *. +')"*$
-A8Ä "$) +4'(('.'@1 * 42 *$")*+"$#' $0 (B'$#"$# !).*"$)!)B+*3#B'$ "$) #+'1 C ,.'0

7 $!*+!%
-611) 2. +')3+ ! $!*+! + D3"+ 04*+!)'$0-'1*$ *. +')"*$ ' + .+*/"0 0 @ 4'()*+,
-7.'('$0 03()-2*3$) 0 ! $!*+! ! B". 1*! 4*+4' 10"$!)'11')"*$ '$0 E"+'$#

%+ %,-%

8*$)+*1!%< +*/"0 0 @ F$*/ $) G "$!)'11 0 @ F$*/ $)

8*$4"#3+')"*$%<'+)"'1 H ("+(

6"+41*B *$)+*1%B *$!)'$) I*132

J(*$*2"K +% &311 (*$*2"K +

L"#B) 7)@'(C%L*$

73..1, &'$ 8*$)+*1%'$3'1 @'1'$(

; 2. +')3+ 8 *$)+*1%3..1, Ä"!(B'+# E:7.'(H !)

J(*$*2"K + F$")"')"*$%3)!"0 0+, @31@! .'(0+, @31@

9"$"232 > 6 8 *$)+*1%*$

N$*((3." 0 9*0 8*$)+*1%L*$

ĀÀ !" #" %&À'#(#)! À+À,!- &'./0*À*" 1*%'#* +2,/.*!À 3&'!+)0À% &À'#%'# .'#* "*À ,0+4

5006!'7*!À 8 ## !À,*+ 1*-,! À* 9),/.*!À +À #À/ ' #: .'!À2+ %#'. +2,/.* !À; 82,&2*7*# '&&)#+ %,#+ À%À2*8 ## !À,*+ ! **" À' 1* *=À*!"*" %#'. 82 À ,+ +2'8!; /0* +* &!À &À À2*%&À'#(%'# #,&,!-

> (* # ?5@AĀBCDE)!,À 8 ## !À(,+ / #'7,"*"

F (* # ?5@AĀBCDE 8 ## !À(,+ / #'7,"*" %# 00&'./#*++'#+

APPENDIX 5C

LIFE CYCLE COST ESTIMATES

Projected Flows & Loads & Unit Costs

Inputs in Blue
Calculations in Black

Projected Unit Costs

Year	2020	2021	2022	2023	2024	2025	2026	2027	2028	2029	2030	2031	2032	2033	2034	2035	2036	2037	2038	2039	2040	2041	2042	2043	2044	2045	2046	2047	2048
Average Electricity Rate ($/kWh)					$0.111	$0.115	$0.119	$0.123	$0.127	$0.132	$0.136	$0.141	$0.146	$0.151	$0.157	$0.162	$0.168	$0.174	$0.180	$0.186	$0.192	$0.199	$0.206	$0.213	$0.221	$0.229	$0.237	$0.245	$0.253
Natural gas ($/million Btu HHV)					$5.46	$5.65	$5.85	$6.05	$6.27	$6.48	$6.71	$6.95	$7.19	$7.44	$7.70	$7.97	$8.25	$8.54	$8.84	$9.15	$9.47	$9.80	$10.14	$10.50	$10.86	$11.24	$11.64	$12.05	$12.47
Heating Hot Water System O&M cost, $/yr						$27,500	$28,463	$29,459	$30,490	$31,557	$32,661	$33,805	$34,988	$36,212	$37,480	$38,791	$40,149	$41,554	$43,009	$44,514	$46,072	$47,685	$49,354	$51,081	$52,869	$54,719	$56,634	$58,617	$60,668

Financial Assumptions

	Value	Range?	Source
Escalation rate (%)	3.5%		Per Ana, MMSD
Interest Rate (%)	2.500%		Per Ana, MMSD- Discount rate = 2.5%
Alliant Energy - averaged rate ($/kWh)	$0.111		Total monthly bill divided by the kWh in that month for 2024
Natural gas ($/million Btu HHV)	$5.460		Total monthly bill divided by the therms used in that month for 2024

NULL HEATING HOT WATER SYSTEM O&M

Performance Inputs	
1 kWh to Btu conversion	3,412.14
Boiler efficiency	80%
Steam Boiler efficiency	80%

O&M/Revenue & Life-cycle Cost Inputs	
Life-cycle cost inputs	
2025 Project Cost	$3,259,000
Escalation rate	3.5%
Interest rate	2.5%
Present Value (PV) year	2028

Annual Performance, O&M Costs, Revenue, and Life-Cycle Costs

Year	Average/Sum		2026	2027	2028	2029	2030	2031	2032	2033	2034	2035	2036	2037	2038	2039	2040	2041	2042	2043	2044	2045	2046	2047	2048
Operation Data, Instantaneous																									
Pumps electrical output (kW)					56	56	56	56	56	56	56	56	56	56	56	56	56	56	56	56	56	56	56	56	56
Operation Data, Accounting for System Uptime																									
Pumps operating hours (hrs/yr)					3,081	3,081	3,081	3,081	3,081	3,081	3,081	3,081	3,081	3,081	3,081	3,081	3,081	3,081	3,081	3,081	3,081	3,081	3,081	3,081	3,081
Pump electrical input (kW/yr)					172,536	172,536	172,536	172,536	172,536	172,536	172,536	172,536	172,536	172,536	172,536	172,536	172,536	172,536	172,536	172,536	172,536	172,536	172,536	172,536	172,536
Natural Gas Consumption																									
Average natural gas use (million Btu/yr)					58,400	58,400	58,400	58,400	58,400	58,400	58,400	58,400	58,400	58,400	58,400	58,400	58,400	58,400	58,400	58,400	58,400	58,400	58,400	58,400	58,400
Annual O&M Costs/(Revenue)																									
Annual O&M Costs																									
Natural gas cost ($/year)	$536,000					$378,780	$392,037	$405,758	$419,960	$434,658	$449,872	$465,617	$481,914	$498,781	$516,238	$534,306	$553,007	$572,362	$592,395	$613,129	$634,588	$656,799	$679,787	$703,579	$728,205
Electric Cost ($/year)	$32,000					$22,746	$23,542	$24,366	$25,219	$26,102	$27,015	$27,961	$28,939	$29,952	$31,000	$32,085	$33,208	$34,371	$35,574	$36,819	$38,107	$39,441	$40,822	$42,250	$43,729
Heating hot water system O&M cost ($/year)	$45,000					$31,557	$32,661	$33,805	$34,988	$36,212	$37,480	$38,791	$40,149	$41,554	$43,009	$44,514	$46,072	$47,685	$49,354	$51,081	$52,869	$54,719	$56,634	$58,617	$60,668
Total O&M Costs ($/yr)	**$613,000**					**$433,083**	**$448,241**	**$463,929**	**$480,166**	**$496,972**	**$514,366**	**$532,369**	**$551,002**	**$570,287**	**$590,247**	**$610,906**	**$632,288**	**$654,418**	**$677,322**	**$701,028**	**$725,564**	**$750,959**	**$777,243**	**$804,446**	**$832,602**
Life Cycle Costs	**$15,506,439**																								
Present Value of O&M Cost and Revenue (2028 $)	*Costs shown as positive values. Revenue or savings shown as negative values.*																								
Annual O&M Costs																									
Annual natural gas cost ($/year)	$406,000					$369,541	$373,147	$376,787	$380,463	$384,175	$387,923	$391,707	$395,529	$399,388	$403,284	$407,219	$411,192	$415,203	$419,254	$423,344	$427,474	$431,645	$435,856	$440,108	$444,402
Electric Cost ($/year)	$24,000					$22,191	$22,408	$22,626	$22,847	$23,070	$23,295	$23,522	$23,752	$23,983	$24,217	$24,454	$24,692	$24,933	$25,176	$25,422	$25,670	$25,921	$26,173	$26,429	$26,687
Annual OM ($/yr)	$34,000					$30,787	$31,088	$31,391	$31,697	$32,006	$32,319	$32,634	$32,952	$33,274	$33,598	$33,926	$34,257	$34,591	$34,929	$35,270	$35,614	$35,961	$36,312	$36,666	$37,024
Total O&M Costs ($/yr)	**$464,000**					**$422,520**	**$426,642**	**$430,804**	**$435,007**	**$439,251**	**$443,536**	**$447,864**	**$452,233**	**$456,645**	**$461,100**	**$465,599**	**$470,141**	**$474,728**	**$479,359**	**$484,036**	**$488,758**	**$493,527**	**$498,342**	**$503,203**	**$508,113**
Net Present Value (NPV)(2028 $)																									
PV of Project Cost					$3,614,000																				
PV of Net O&M Costs	$465,000				$0	$423,000	$427,000	$431,000	$436,000	$440,000	$444,000	$448,000	$453,000	$457,000	$462,000	$466,000	$471,000	$475,000	$480,000	$485,000	$489,000	$494,000	$499,000	$504,000	$509,000
Total NPV					$3,614,000	$4,037,000	$4,464,000	$4,895,000	$5,331,000	$5,771,000	$6,215,000	$6,663,000	$7,116,000	$7,573,000	$8,035,000	$8,501,000	$8,972,000	$9,447,000	$9,927,000	$10,412,000	$10,901,000	$11,395,000	$11,894,000	$12,398,000	$12,907,000
Total NPV (2028 $)	**$12,907,000**																								

PATHWAY 1 CENTRALIZED HEATING HOT WATER SYSTEM O&M

Performance Inputs	
1 kWh to Btu conversion	3,412.14
Boiler efficiency	82%

O&M/Revenue & Life-cycle Cost Inputs	
Life-cycle cost inputs	
2025 Project Cost	$19,748,000
Escalation rate	3.5%
Interest rate	2.5%
Present Value (PV) year	2028

Annual Performance, O&M Costs, Revenue, and Life-Cycle Costs

Year	Average/Sum	2026	2027	2028	2029	2030	2031	2032	2033	2034	2035	2036	2037	2038	2039	2040	2041	2042	2043	2044	2045	2046	2047	2048
Operation Data, Instantaneous																								
Pumps electrical output (kW)				111	111	111	111	111	111	111	111	111	111	111	111	111	111	111	111	111	111	111	111	111
Operation Data, Accounting for System Uptime																								
Pumps operating hours (hrs/yr)				3,081	3,081	3,081	3,081	3,081	3,081	3,081	3,081	3,081	3,081	3,081	3,081	3,081	3,081	3,081	3,081	3,081	3,081	3,081	3,081	3,081
Pump electrical input (kW/yr)				341,313	341,313	341,313	341,313	341,313	341,313	341,313	341,313	341,313	341,313	341,313	341,313	341,313	341,313	341,313	341,313	341,313	341,313	341,313	341,313	341,313
Natural Gas Consumption																								
Average natural gas use Hot Water System (million Btu/yr)				22,200	22,200	22,200	22,200	22,200	22,200	22,200	22,200	22,200	22,200	22,200	22,200	22,200	22,200	22,200	22,200	22,200	22,200	22,200	22,200	22,200
Average natural gas use Acid Digesters (million Btu/yr)				38,800	38,800	38,800	38,800	38,800	38,800	38,800	38,800	38,800	38,800	38,800	38,800	38,800	38,800	38,800	38,800	38,800	38,800	38,800	38,800	38,800
Annual O&M Costs/(Revenue)																								
Annual O&M Costs																								
Natural Gas Cost Hot Water System ($/yr)	$204,000				$143,962	$149,000	$154,216	$159,613	$165,200	$170,981	$176,966	$183,160	$189,570	$196,205	$203,072	$210,180	$217,536	$225,150	$233,030	$241,186	$249,628	$258,365	$267,408	$276,767
Natural Gas Cost Acid Digesters ($/yr)	$356,000				$251,609	$260,415	$269,530	$278,963	$288,727	$298,833	$309,292	$320,117	$331,321	$342,917	$354,919	$367,341	$380,198	$393,505	$407,278	$421,533	$436,286	$451,556	$467,361	$483,719
Electrical Cost ($/yr)	$64,000				$44,996	$46,571	$48,201	$49,888	$51,634	$53,442	$55,312	$57,248	$59,252	$61,325	$63,472	$65,693	$67,993	$70,372	$72,835	$75,385	$78,023	$80,754	$83,580	$86,506
Heating Hot Water System O&M cost, ($/yr)	$45,000				$31,557	$32,661	$33,805	$34,988	$36,212	$37,480	$38,791	$40,149	$41,554	$43,009	$44,514	$46,072	$47,685	$49,354	$51,081	$52,869	$54,719	$56,634	$58,617	$60,668
Total O&M Costs ($/yr)	**$669,000**				**$472,124**	**$488,648**	**$505,751**	**$523,452**	**$541,773**	**$560,735**	**$580,361**	**$600,674**	**$621,697**	**$643,457**	**$665,978**	**$689,287**	**$713,412**	**$738,381**	**$764,225**	**$790,973**	**$818,657**	**$847,310**	**$876,965**	**$907,659**
Present Value of O&M Cost and Revenue (2029 $)	*Costs shown as positive values. Revenue or savings shown as negative values.*																							
Annual O&M Costs																								
Natural gas cost Hot Water System ($/yr)	$154,000				$140,451	$141,821	$143,204	$144,602	$146,012	$147,437	$148,875	$150,328	$151,794	$153,275	$154,771	$156,281	$157,805	$159,345	$160,899	$162,469	$164,054	$165,655	$167,271	$168,903
Natural gas cost Acid Digesters ($/yr)	$270,000				$245,472	$247,867	$250,285	$252,727	$255,193	$257,682	$260,196	$262,735	$265,298	$267,886	$270,500	$273,139	$275,804	$278,494	$281,211	$283,955	$286,725	$289,523	$292,347	$295,199
Electrical Cost ($/yr)	$48,000				$43,899	$44,327	$44,760	$45,196	$45,637	$46,083	$46,532	$46,986	$47,444	$47,907	$48,375	$48,847	$49,323	$49,804	$50,290	$50,781	$51,276	$51,777	$52,282	$52,792
Heating Hot Water System O&M cost, ($/yr)	$34,000				$30,787	$31,088	$31,391	$31,697	$32,006	$32,319	$32,634	$32,952	$33,274	$33,598	$33,926	$34,257	$34,591	$34,929	$35,270	$35,614	$35,961	$36,312	$36,666	$37,024
Total O&M Costs ($/yr)	**$506,000**				**$460,609**	**$465,103**	**$469,640**	**$474,222**	**$478,849**	**$483,520**	**$488,238**	**$493,001**	**$497,811**	**$502,667**	**$507,571**	**$512,523**	**$517,524**	**$522,573**	**$527,671**	**$532,819**	**$538,017**	**$543,266**	**$548,566**	**$553,918**
Net Present Value (NPV)(2028 $)																								
PV of Project Cost				$21,895,000																				
PV of Net O&M Costs	$506,000			$0	$460,609	$465,103	$469,640	$474,222	$478,849	$483,520	$488,238	$493,001	$497,811	$502,667	$507,571	$512,523	$517,524	$522,573	$527,671	$532,819	$538,017	$543,266	$548,566	$553,918
Total NPV				$21,895,000	$22,355,609	$22,820,711	$23,290,352	$23,764,574	$24,243,422	$24,726,943	$25,215,180	$25,708,181	$26,205,992	$26,708,659	$27,216,230	$27,728,754	$28,246,277	$28,768,850	$29,296,521	$29,829,339	$30,367,356	$30,910,622	$31,459,189	$32,013,107
Total NPV (2028 $)	**$32,013,000**																							

PATHWAY 1 DECENTRALIZED HEATING HOT WATER SYSTEM O&M

Performance Inputs	
1 kWh to Btu conversion	3,412.14
Boiler efficiency	82%
Gas-fired HVAC equipment efficiency	92%

O&M/Revenue & Life-cycle Cost Inputs		
Life-cycle cost inputs		
2025 Project Cost		$15,223,000
Escalation rate		3.5%
Interest rate		2.5%
Present Value (PV) year		2028

Annual Performance, O&M Costs, Revenue, and Life-Cycle Costs

Year	Average/Sum	2026	2027	2028	2029	2030	2031	2032	2033	2034	2035	2036	2037	2038	2039	2040	2041	2042	2043	2044	2045	2046	2047	2048
Operation Data, Instantaneous																								
Pumps electrical output (kW)				51	51	51	51	51	51	51	51	51	51	51	51	51	51	51	51	51	51	51	51	51
Operation Data, Accounting for System Uptime																								
Pumps operating hours (hrs/yr)				3,081	3,081	3,081	3,081	3,081	3,081	3,081	3,081	3,081	3,081	3,081	3,081	3,081	3,081	3,081	3,081	3,081	3,081	3,081	3,081	3,081
Pump electrical input (kW/yr)				158,055	158,055	158,055	158,055	158,055	158,055	158,055	158,055	158,055	158,055	158,055	158,055	158,055	158,055	158,055	158,055	158,055	158,055	158,055	158,055	158,055
Natural Gas Consumption																								
Average natural gas use Hot Water System (million Btu/yr)				5,900	5,900	5,900	5,900	5,900	5,900	5,900	5,900	5,900	5,900	5,900	5,900	5,900	5,900	5,900	5,900	5,900	5,900	5,900	5,900	5,900
Average natural gas use Gas-Fired Heating Equipment(million Btu/yr)				20,200	20,200	20,200	20,200	20,200	20,200	20,200	20,200	20,200	20,200	20,200	20,200	20,200	20,200	20,200	20,200	20,200	20,200	20,200	20,200	20,200
Average natural gas use Acid Digesters (million Btu/yr)				38,800	38,800	38,800	38,800	38,800	38,800	38,800	38,800	38,800	38,800	38,800	38,800	38,800	38,800	38,800	38,800	38,800	38,800	38,800	38,800	38,800
Annual O&M Costs/(Revenue)																								
Annual O&M Costs																								
Natural gas cost Hot Water System ($/yr)	$54,000				$38,260	$39,599	$40,985	$42,420	$43,904	$45,441	$47,031	$48,678	$50,381	$52,145	$53,970	$55,859	$57,814	$59,837	$61,931	$64,099	$66,343	$68,665	$71,068	$73,555
Natural gas cost Gas-Fired Heating Equipment ($/yr)	$185,000				$130,992	$135,577	$140,322	$145,234	$150,317	$155,578	$161,023	$166,659	$172,492	$178,529	$184,778	$191,245	$197,938	$204,866	$212,037	$219,458	$227,139	$235,089	$243,317	$251,833
Natural gas cost Acid Digesters ($/yr)	$356,000				$251,609	$260,415	$269,530	$278,963	$288,727	$298,833	$309,292	$320,117	$331,321	$342,917	$354,919	$367,341	$380,198	$393,505	$407,278	$421,533	$436,286	$451,556	$467,361	$483,719
Electric Cost ($/yr)	$29,000				$20,837	$21,566	$22,321	$23,102	$23,911	$24,748	$25,614	$26,510	$27,438	$28,399	$29,393	$30,421	$31,486	$32,588	$33,729	$34,909	$36,131	$37,396	$38,704	$40,059
Heating hot water system O&M cost, ($/yr)	$45,000				$31,557	$32,661	$33,805	$34,988	$36,212	$37,480	$38,791	$40,149	$41,554	$43,009	$44,514	$46,072	$47,685	$49,354	$51,081	$52,869	$54,719	$56,634	$58,617	$60,668
Total O&M Costs ($/yr)	**$669,000**				**$473,255**	**$489,819**	**$506,963**	**$524,707**	**$543,071**	**$562,079**	**$581,751**	**$602,113**	**$623,187**	**$644,998**	**$667,573**	**$690,938**	**$715,121**	**$740,150**	**$766,056**	**$792,868**	**$820,618**	**$849,340**	**$879,066**	**$909,834**
Life Cycle Costs	**$28,606,507**																							
Present Value of O&M Cost and Revenue (2029 $)	*Costs shown as positive values. Revenue or savings shown as negative values.*																							
Annual O&M Costs																								
Natural gas cost Hot Water System ($/yr)	$41,000				$37,327	$37,691	$38,059	$38,430	$38,805	$39,184	$39,566	$39,952	$40,342	$40,735	$41,133	$41,534	$41,939	$42,348	$42,762	$43,179	$43,600	$44,025	$44,455	$44,889
Natural gas cost Gas-Fired Heating Equipment ($/yr)	$140,000				$127,797	$129,044	$130,303	$131,574	$132,858	$134,154	$135,463	$136,785	$138,119	$139,467	$140,827	$142,201	$143,589	$144,989	$146,404	$147,832	$149,275	$150,731	$152,201	$153,686
Natural gas cost Acid Digesters ($/yr)	$270,000				$245,472	$247,867	$250,285	$252,727	$255,193	$257,682	$260,196	$262,735	$265,298	$267,886	$270,500	$273,139	$275,804	$278,494	$281,211	$283,955	$286,725	$289,523	$292,347	$295,199
Electric Cost ($/yr)	$22,000				$20,329	$20,527	$20,727	$20,930	$21,134	$21,340	$21,548	$21,758	$21,971	$22,185	$22,401	$22,620	$22,841	$23,063	$23,288	$23,516	$23,745	$23,977	$24,211	$24,447
Annual OM, $/yr	$34,000				$30,787	$31,088	$31,391	$31,697	$32,006	$32,319	$32,634	$32,952	$33,274	$33,598	$33,926	$34,257	$34,591	$34,929	$35,270	$35,614	$35,961	$36,312	$36,666	$37,024
Total O&M Costs ($/yr)	**$507,000**				**$461,712**	**$466,217**	**$470,765**	**$475,358**	**$479,996**	**$484,679**	**$489,407**	**$494,182**	**$499,003**	**$503,872**	**$508,787**	**$513,751**	**$518,763**	**$523,825**	**$528,935**	**$534,095**	**$539,306**	**$544,568**	**$549,880**	**$555,245**
Net Present Value (NPV)(2028 $)																								
PV of Project Cost				$16,878,000																				
PV of Net O&M Costs	$507,000			$0	$461,712	$466,217	$470,765	$475,358	$479,996	$484,679	$489,407	$494,182	$499,003	$503,872	$508,787	$513,751	$518,763	$523,825	$528,935	$534,095	$539,306	$544,568	$549,880	$555,245
Total NPV				$16,878,000	$17,339,712	$17,805,929	$18,276,695	$18,752,053	$19,232,049	$19,716,727	$20,206,135	$20,700,317	$21,199,320	$21,703,192	$22,211,979	$22,725,730	$23,244,494	$23,768,318	$24,297,253	$24,831,349	$25,370,655	$25,915,222	$26,465,103	$27,020,348
Total NPV (2028 $)	**$27,020,000**																							

PATHWAY 2 CENTRALIZED HEATING HOT WATER SYSTEM O&M

Performance Inputs	
1 kWh to Btu conversion	3,412.14
Boiler efficiency	82%

O&M/Revenue & Life-cycle Cost Inputs	
Life-cycle cost inputs	
2025 Project Cost	$19,748,000
Escalation rate	3.5%
Interest rate	2.5%
Present Value (PV) year	2028

Annual Performance, O&M Costs, Revenue, and Life-Cycle Costs

Year	Average/Sum		2026	2027	2028	2029	2030	2031	2032	2033	2034	2035	2036	2037	2038	2039	2040	2041	2042	2043	2044	2045	2046	2047	2048
Operation Data, Instantaneous																									
Pumps electrical output (kW)					111	111	111	111	111	111	111	111	111	111	111	111	111	111	111	111	111	111	111	111	111
Operation Data, Accounting for Engine Uptime																									
Pumps operating hours (hrs/yr)					3,081	3,081	3,081	3,081	3,081	3,081	3,081	3,081	3,081	3,081	3,081	3,081	3,081	3,081	3,081	3,081	3,081	3,081	3,081	3,081	3,081
Pump electrical input (kW/yr)					341,313	341,313	341,313	341,313	341,313	341,313	341,313	341,313	341,313	341,313	341,313	341,313	341,313	341,313	341,313	341,313	341,313	341,313	341,313	341,313	341,313
Natural Gas Consumption																									
Average natural gas use Hot Water System (million Btu/yr)					80,000	80,000	80,000	80,000	80,000	80,000	80,000	80,000	80,000	80,000	80,000	80,000	80,000	80,000	80,000	80,000	80,000	80,000	80,000	80,000	80,000
Average natural gas use Acid Digesters (million Btu/yr)					38,800	38,800	38,800	38,800	38,800	38,800	38,800	38,800	38,800	38,800	38,800	38,800	38,800	38,800	38,800	38,800	38,800	38,800	38,800	38,800	38,800
Annual O&M Costs/(Revenue)																									
Annual O&M Costs																									
Natural gas cost Hot Water System ($/yr)	$734,000					$518,781	$536,939	$555,732	$575,182	$595,314	$616,150	$637,715	$660,035	$683,136	$707,046	$731,792	$757,405	$783,914	$811,351	$839,749	$869,140	$899,560	$931,044	$963,631	$997,358
Natural gas cost Acid Digesters ($/yr)	$356,000					$251,609	$260,415	$269,530	$278,963	$288,727	$298,833	$309,292	$320,117	$331,321	$342,917	$354,919	$367,341	$380,198	$393,505	$407,278	$421,533	$436,286	$451,556	$467,361	$483,719
Electric Cost ($/yr)	$64,000					$44,996	$46,571	$48,201	$49,888	$51,634	$53,442	$55,312	$57,248	$59,252	$61,325	$63,472	$65,693	$67,993	$70,372	$72,835	$75,385	$78,023	$80,754	$83,580	$86,506
Heating hot water system O&M cost, ($/yr)	$45,000					$31,557	$32,661	$33,805	$34,988	$36,212	$37,480	$38,791	$40,149	$41,554	$43,009	$44,514	$46,072	$47,685	$49,354	$51,081	$52,869	$54,719	$56,634	$58,617	$60,668
Total O&M Costs ($/yr)	**$1,199,000**					**$846,944**	**$876,587**	**$907,267**	**$939,022**	**$971,887**	**$1,005,903**	**$1,041,110**	**$1,077,549**	**$1,115,263**	**$1,154,297**	**$1,194,698**	**$1,236,512**	**$1,279,790**	**$1,324,583**	**$1,370,943**	**$1,418,926**	**$1,468,588**	**$1,519,989**	**$1,573,189**	**$1,628,250**
Life Cycle Costs	**$43,699,296**																								
Present Value of O&M Cost and Revenue (2029 $)	*Costs shown as positive values. Revenue or savings shown as negative values.*																								
Annual O&M Costs																									
Natural gas cost Hot Water System ($/yr)	$556,000					$506,128	$511,066	$516,052	$521,087	$526,170	$531,304	$536,487	$541,721	$547,006	$552,343	$557,732	$563,173	$568,667	$574,215	$579,817	$585,474	$591,186	$596,954	$602,778	$608,659
Natural gas cost Acid Digesters ($/yr)	$270,000					$245,472	$247,867	$250,285	$252,727	$255,193	$257,682	$260,196	$262,735	$265,298	$267,886	$270,500	$273,139	$275,804	$278,494	$281,211	$283,955	$286,725	$289,523	$292,347	$295,199
Electric Cost ($/yr)	$48,000					$43,899	$44,327	$44,760	$45,196	$45,637	$46,083	$46,532	$46,986	$47,444	$47,907	$48,375	$48,847	$49,323	$49,804	$50,290	$50,781	$51,276	$51,777	$52,282	$52,792
Annual OM, $/yr	$34,000					$30,787	$31,088	$31,391	$31,697	$32,006	$32,319	$32,634	$32,952	$33,274	$33,598	$33,926	$34,257	$34,591	$34,929	$35,270	$35,614	$35,961	$36,312	$36,666	$37,024
Total O&M Costs ($/yr)	**$908,000**					**$826,286**	**$834,348**	**$842,488**	**$850,707**	**$859,007**	**$867,387**	**$875,850**	**$884,394**	**$893,023**	**$901,735**	**$910,533**	**$919,416**	**$928,386**	**$937,443**	**$946,589**	**$955,824**	**$965,149**	**$974,565**	**$984,073**	**$993,674**
Net Present Value (NPV)(2028 $)																									
PV of Project Cost					$21,895,000																				
PV of Net O&M Costs	$908,000				$0	$826,286	$834,348	$842,488	$850,707	$859,007	$867,387	$875,850	$884,394	$893,023	$901,735	$910,533	$919,416	$928,386	$937,443	$946,589	$955,824	$965,149	$974,565	$984,073	$993,674
Total NPV					$21,895,000	$22,721,286	$23,555,634	$24,398,122	$25,248,829	$26,107,836	$26,975,223	$27,851,073	$28,735,467	$29,628,490	$30,530,225	$31,440,758	$32,360,174	$33,288,559	$34,226,003	$35,172,591	$36,128,415	$37,093,564	$38,068,130	$39,052,203	$40,045,877
Total NPV (2028 $)	**$40,046,000**																								

PATHWAY 2 DECENTRALIZED HEATING HOT WATER SYSTEM O&M

Performance Inputs	
1 kWh to Btu conversion	3,412.14
Boiler efficiency	82%
Gas-fired HVAC equipment efficiency	92%

O&M/Revenue & Life-cycle Cost Inputs		
Life-cycle cost inputs		
2025 Project Cost		$11,711,000
Escalation rate		3.5%
Interest rate		2.5%
Present Value (PV) year		2028

Annual Performance, O&M Costs, Revenue, and Life-Cycle Costs

Year	Average/Sum	2026	2027	2028	2029	2030	2031	2032	2033	2034	2035	2036	2037	2038	2039	2040	2041	2042	2043	2044	2045	2046	2047	2048
Operation Data, Instantaneous																								
Pumps electrical output (kW)				51	51	51	51	51	51	51	51	51	51	51	51	51	51	51	51	51	51	51	51	51
Operation Data, Accounting for Engine Uptime																								
Pumps operating hours (hrs/yr)				3,081	3,081	3,081	3,081	3,081	3,081	3,081	3,081	3,081	3,081	3,081	3,081	3,081	3,081	3,081	3,081	3,081	3,081	3,081	3,081	3,081
Pump electrical input (kW/yr)				158,055	158,055	158,055	158,055	158,055	158,055	158,055	158,055	158,055	158,055	158,055	158,055	158,055	158,055	158,055	158,055	158,055	158,055	158,055	158,055	158,055
Natural Gas Consumption																								
Average natural gas use Hot Water System (million Btu/yr)				35,700	35,700	35,700	35,700	35,700	35,700	35,700	35,700	35,700	35,700	35,700	35,700	35,700	35,700	35,700	35,700	35,700	35,700	35,700	35,700	35,700
Average natural gas use Gas-Fired Heating Equipment(million Btu/yr)				41,900	41,900	41,900	41,900	41,900	41,900	41,900	41,900	41,900	41,900	41,900	41,900	41,900	41,900	41,900	41,900	41,900	41,900	41,900	41,900	41,900
Average natural gas use Acid Digesters (million Btu/yr)				38,800	38,800	38,800	38,800	38,800	38,800	38,800	38,800	38,800	38,800	38,800	38,800	38,800	38,800	38,800	38,800	38,800	38,800	38,800	38,800	38,800
Annual O&M Costs/(Revenue)	*Costs shown as positive values. Revenue or savings shown as negative values.*																							
Annual O&M Costs																								
Natural gas cost Hot Water System ($/yr)	$327,000				$231,506	$239,609	$247,995	$256,675	$265,659	$274,957	$284,580	$294,541	$304,849	$315,519	$326,562	$337,992	$349,822	$362,066	$374,738	$387,854	$401,429	$415,478	$430,020	$445,071
Natural gas cost Gas-Fired Heating Equipment ($/yr)	$384,000				$271,712	$281,222	$291,064	$301,252	$311,795	$322,708	$334,003	$345,693	$357,792	$370,315	$383,276	$396,691	$410,575	$424,945	$439,818	$455,212	$471,144	$487,634	$504,702	$522,366
Natural gas cost Acid Digesters ($/yr)	$356,000				$251,609	$260,415	$269,530	$278,963	$288,727	$298,833	$309,292	$320,117	$331,321	$342,917	$354,919	$367,341	$380,198	$393,505	$407,278	$421,533	$436,286	$451,556	$467,361	$483,719
Electric Cost ($/yr)	$29,000				$20,837	$21,566	$22,321	$23,102	$23,911	$24,748	$25,614	$26,510	$27,438	$28,399	$29,393	$30,421	$31,486	$32,588	$33,729	$34,909	$36,131	$37,396	$38,704	$40,059
Heating hot water system O&M cost, ($/yr)	$45,000				$31,557	$32,661	$33,805	$34,988	$36,212	$37,480	$38,791	$40,149	$41,554	$43,009	$44,514	$46,072	$47,685	$49,354	$51,081	$52,869	$54,719	$56,634	$58,617	$60,668
Total O&M Costs ($/yr)	**$1,141,000**				**$807,221**	**$835,473**	**$864,715**	**$894,980**	**$926,304**	**$958,725**	**$992,280**	**$1,027,010**	**$1,062,956**	**$1,100,159**	**$1,138,665**	**$1,178,518**	**$1,219,766**	**$1,262,458**	**$1,306,644**	**$1,352,376**	**$1,399,709**	**$1,448,699**	**$1,499,404**	**$1,551,883**
Life Cycle Costs	**$34,538,945**																							
Present Value of O&M Cost and Revenue (2029 $)	*Costs shown as positive values. Revenue or savings shown as negative values.*																							
Annual O&M Costs																								
Natural gas cost Hot Water System ($/yr)	$248,000				$225,860	$228,063	$230,288	$232,535	$234,804	$237,094	$239,407	$241,743	$244,102	$246,483	$248,888	$251,316	$253,768	$256,244	$258,744	$261,268	$263,817	$266,391	$268,990	$271,614
Natural gas cost Gas-Fired Heating Equipment ($/yr)	$291,000				$265,085	$267,671	$270,282	$272,919	$275,582	$278,270	$280,985	$283,727	$286,495	$289,290	$292,112	$294,962	$297,840	$300,745	$303,679	$306,642	$309,634	$312,655	$315,705	$318,785
Natural gas cost Acid Digesters ($/yr)	$270,000				$245,472	$247,867	$250,285	$252,727	$255,193	$257,682	$260,196	$262,735	$265,298	$267,886	$270,500	$273,139	$275,804	$278,494	$281,211	$283,955	$286,725	$289,523	$292,347	$295,199
Electric Cost ($/yr)	$22,000				$20,329	$20,527	$20,727	$20,930	$21,134	$21,340	$21,548	$21,758	$21,971	$22,185	$22,401	$22,620	$22,841	$23,063	$23,288	$23,516	$23,745	$23,977	$24,211	$24,447
Annual OM, $/yr	$34,000				$30,787	$31,088	$31,391	$31,697	$32,006	$32,319	$32,634	$32,952	$33,274	$33,598	$33,926	$34,257	$34,591	$34,929	$35,270	$35,614	$35,961	$36,312	$36,666	$37,024
Total O&M Costs ($/yr)	**$865,000**				**$787,532**	**$795,216**	**$802,974**	**$810,808**	**$818,718**	**$826,706**	**$834,771**	**$842,915**	**$851,139**	**$859,442**	**$867,827**	**$876,294**	**$884,843**	**$893,476**	**$902,193**	**$910,994**	**$919,882**	**$928,857**	**$937,919**	**$947,069**
Net Present Value (NPV)(2028 $)																								
PV of Project Cost				$12,984,000																				
PV of Net O&M Costs	$865,000			$0	$787,532	$795,216	$802,974	$810,808	$818,718	$826,706	$834,771	$842,915	$851,139	$859,442	$867,827	$876,294	$884,843	$893,476	$902,193	$910,994	$919,882	$928,857	$937,919	$947,069
Total NPV				$12,984,000	$13,771,532	$14,566,748	$15,369,722	$16,180,530	$16,999,248	$17,825,953	$18,660,724	$19,503,639	$20,354,778	$21,214,220	$22,082,048	$22,958,342	$23,843,185	$24,736,660	$25,638,853	$26,549,847	$27,469,729	$28,398,586	$29,336,505	$30,283,574
Total NPV (2028 $)	**$30,284,000**																							

APPENDIX 5D

SITE DIAGRAM COMPARING EXISTING AND ESTIMATED FUTURE FLOWRATES

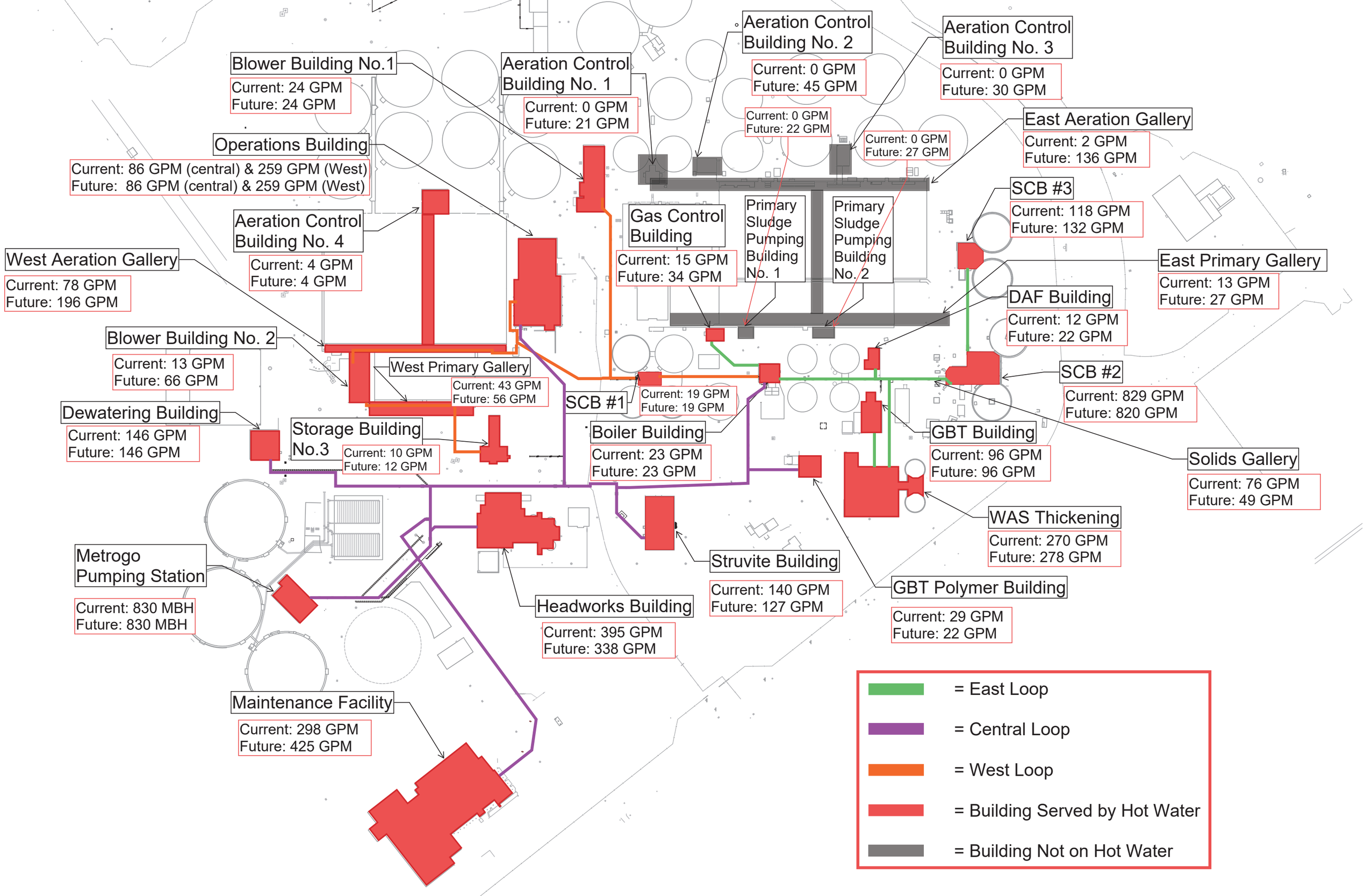
Blower Building No.1
Current: 24 GPM
Future: 24 GPM
Aeration Control Building No. 1
Current: 0 GPM
Future: 21 GPM
Aeration Control Building No. 2
Current: 0 GPM
Future: 45 GPM
Aeration Control Building No. 3
Current: 0 GPM
Future: 30 GPM
Current: 0 GPM
Future: 22 GPM
Current: 0 GPM
Future: 27 GPM
East Aeration Gallery
Current: 2 GPM
Future: 136 GPM
Operations Building
Current: 86 GPM (central) & 259 GPM (West)
Future: 86 GPM (central) & 259 GPM (West)
SCB #3
Current: 118 GPM
Future: 132 GPM
Aeration Control Building No. 4
Current: 4 GPM
Future: 4 GPM
Gas Control Building
Current: 15 GPM
Future: 34 GPM
Primary Sludge Pumping Building No. 1
Primary Sludge Pumping Building No. 2
West Aeration Gallery
Current: 78 GPM
Future: 196 GPM
East Primary Gallery
Current: 13 GPM
Future: 27 GPM
DAF Building
Current: 12 GPM
Future: 22 GPM
Blower Building No. 2
Current: 13 GPM
Future: 66 GPM
West Primary Gallery
Current: 43 GPM
Future: 56 GPM
SCB #1
Current: 19 GPM
Future: 19 GPM
SCB #2
Current: 829 GPM
Future: 820 GPM
Dewatering Building
Current: 146 GPM
Future: 146 GPM
Storage Building No.3
Current: 10 GPM
Future: 12 GPM
Boiler Building
Current: 23 GPM
Future: 23 GPM
GBT Building
Current: 96 GPM
Future: 96 GPM
Solids Gallery
Current: 76 GPM
Future: 49 GPM
WAS Thickening
Current: 270 GPM
Future: 278 GPM
Metrogo Pumping Station
Current: 830 MBH
Future: 830 MBH
Struvite Building
Current: 140 GPM
Future: 127 GPM
GBT Polymer Building
Current: 29 GPM
Future: 22 GPM
Headworks Building
Current: 395 GPM
Future: 338 GPM
Maintenance Facility
Current: 298 GPM
Future: 425 GPM
= East Loop
= Central Loop
= West Loop
= Building Served by Hot Water
= Building Not on Hot Water

APPENDIX 5E

2021 FACILITY HEATING, VENTILATION, AND AIR CONDITIONING STUDY

Strand Associates, Inc.®
910 West Wingra Drive
Madison, WI 53715
(P) 608.251.4843

May 20, 2021

Mr. Erik Rehr, P.E.
Madison Metropolitan Sewerage District
1610 Moorland Road
Madison, WI 53713

Re: Facility Heating, Ventilation, and Air Conditioning Study

Dear Mr. Rehr:

Enclosed is the Facility Heating, Ventilation, and Air Conditioning Study.

Please call me with questions at 608-251-4843.

Sincerely,

STRAND ASSOCIATES, INC.®

Adam Gander, P.E.

Enclosure: Report

Report for
Madison Metropolitan Sewerage District, Madison, Wisconsin

Facility Heating, Ventilation, and Air Conditioning Study

WISCONSIN
ADAM D.
GANDER
E-42694
MADISON,
WI
PROFESSIONAL ENGINEER

Prepared by:

STRAND ASSOCIATES, INC.®
910 West Wingra Drive
Madison, WI 53715
www.strand.com

May 2021

STRAND
ASSOCIATES®

TABLE OF CONTENTS

Page No.
or Following

EXECUTIVE SUMMARY

SECTION 1–INTRODUCTION

1.01 Background 1-1
1.02 Methodology 1-1
1.03 Code Review 1-1
1.04 American Society of Heating, Refrigeration, and Air Conditioning Engineers (ASHRAE) Equipment Service Life 1-2
1.05 Basis of Cost Opinions 1-2
1.06 Prioritization 1-3
1.07 Abbreviations 1-4

SECTION 2–MMSD SITE BUILDINGS

2.01 Aeration Control Building No. 1 2-3
2.02 Aeration Control Building No. 2 2-5
2.03 Aeration Control Building No. 3 2-8
2.04 Aeration Control Building No. 4 2-11
2.05 Blower Building No. 1 2-14
2.06 Blower Building No. 2 2-18
2.07 Boiler Building 2-22
2.08 Dissolved Air Floatation (DAF) Building 2-24
2.09 DAF Thickener 2-26
2.10 East Aeration Gallery 2-29
2.11 East Primary Gallery 2-31
2.12 Effluent Building 2-33
2-13 Gas Control Building 2-38
2.14 Gravity Belt Thickener (GBT) Building 2-41
2.15 GBT Polymer Building 2-44
2.16 Headworks Building 2-47
2.17 Metrogro Pumping Station 2-53
2.18 Primary Sludge Pumping Building No. 1 2-56
2.19 Primary Sludge Pumping Building No. 2 2-59
2.20 Service Building 2-62
2.21 Shop Building No. 1 2-65
2.22 Shop Building No. 2 2-70
2.23 Sludge Control Building No. 2 2-73
2.24 Sludge Dewatering 2-81
2.25 Solids Gallery 2-84
2.26 Storage Building No. 2 2-87
2.27 Storage Building No. 3 2-89
2.28 Substation Electrical Building U1 2-91
2.29 Substation Electrical Building U15 2-93
2.30 Vehicle Loading Building 2-95
2.31 West Aeration Gallery 2-100
2.32 West Primary Gallery 2-103

Page No.
or Following

2.33 Improvements and OPCC Summary Table 2-105
2.34 Improvements and OPCC Priority Table 2-107
2.35 Improvements Energy Review 2-109

TABLES

2.01-1 Aeration Control Building No. 1 Current Applicable Code Review 2-3
2.01-2 Aeration Control Building No. 1 System Airflow Review 2-4
2.01-3 Aeration Control Building No. 1 OPCC 2-4
2.02-1 Aeration Control Building No. 2 Current Applicable Code Review 2-5
2.02-2 Aeration Control Building No. 2 System Airflow Review 2-6
2.02-3 Aeration Control Building No. 2 OPCC 2-7
2.03-1 Aeration Control Building No. 3 Current Applicable Code Review 2-8
2.03-2 Aeration Control Building No. 3 System Airflow Review 2-9
2.03-3 Aeration Control Building No. 3 OPCC 2-10
2.04-1 Aeration Control Building No. 4 Current Applicable Code Review 2-11
2.04-2 Aeration Control Building No. 4 System Airflow Review 2-12
2.04-3 Aeration Control Building No. 4 OPCC 2-13
2.05-1 Blower Building No. 1 System Airflow Review 2-15
2.05-2 Blower Building No. 1 OPCC–Option 1 2-16
2.05-3 Blower Building No. 1 OPCC–Option 2 2-17
2.06-1 Blower Building No. 2 Current Applicable Code Review 2-19
2.06-2 Blower Building No. 2 System Airflow Review 2-20
2.06-3 Blower Building No. 2 OPCC 2-21
2.07-1 Boiler Building Current Applicable Code Review 2-22
2.07-2 Boiler Building System Airflow Review 2-22
2.07-3 Boiler Building OPCC 2-23
2.08-1 DAF Building Current Applicable Code Review 2-24
2.08-2 DAF Building System Airflow Review 2-24
2.08-3 DAF Building OPCC 2-25
2.09-1 DAF Thickener Current Applicable Code and Standards 2-26
2.09-2 DAF Thickener System Airflow Review 2-27
2.09-3 DAF Thickener OPCC 2-28
2.10-1 East Aeration Gallery Applicable Code and Standards 2-29
2.10-2 East Aeration Gallery Airflow Review 2-30
2.10-3 East Aeration Gallery OPCC 2-30
2.11-1 East Primary Gallery Applicable Code and Standards 2-31
2.11-2 East Primary Gallery Airflow Review 2-32
2.11-3 East Primary Gallery OPCC 2-32
2.12-1 Effluent Building Current Applicable Code Review 2-33
2.12-2 Effluent Building System Airflow Review 2-34
2.12-3 Effluent Building OPCC–Option 1 2-35
2.12-4 Effluent Building OPCC–Option 2 2-36
2.12-5 Effluent Building OPCC–Option 3 2-37
2.13-1 Gas Control Building Current Applicable Code Review 2-38
2.13-2 Gas Control Building System Airflow Review 2-39
2.13-3 Gas Control Building OPCC 2-40
2.14-1 GBT Building Current Applicable Code Review 2-42
2.14-2 GBT Building System Airflow Review 2-42
2.14-3 GBT Building OPCC 2-43
2.15-1 GBT Polymer Building Current Applicable Code Review 2-45

TABLE OF CONTENTS Continued

		Page No. or Following
2.15-2	GBT Polymer Building System Airflow Review	2-45
2.15-3	GBT Polymer Building OPCC	2-46
2.16-1	Headworks Building Current Applicable Codes and Standards	2-48
2.16-2	Headworks Building System Airflow Review	2-49
2.16-3	Headworks Building OPCC–Option 1	2-50
2.16-4	Headworks Building OPCC–Option 2	2-51
2.16-5	Headworks Building OPCC–Option 3	2-52
2.17-1	Metrogro Pumping Station Current Applicable Codes and Standards	2-54
2.17-2	Metrogro Pumping Station System Airflow Review	2-54
2.17-3	Metrogro Pumping Station OPCC	2-55
2.18-1	Primary Sludge Pumping Building No. 1 Current Applicable Code Review	2-56
2.18-2	Primary Sludge Pumping Building No. 1 System Airflow Review	2-57
2.18-3	Primary Sludge Pumping Building No. 1 OPCC	2-58
2.19-1	Primary Sludge Pumping Building No. 2 Current Applicable Code Review	2-59
2.19-2	Primary Sludge Pumping Building No. 2 System Airflow Review	2-60
2.19-3	Primary Sludge Pumping Building No. 2 OPCC	2-61
2.20-1	Service Building Current Applicable Code Review	2-63
2.20-2	Service Building System Airflow Review	2-63
2.21-1	Shop Building No. 1 Current Applicable Code Review	2-66
2.21-2	Shop Building No. 1 System Airflow Review	2-67
2.21-3	Shop Building No. 1 OPCC–Alternative 1	2-68
2.21-4	Shop Building No. 1 OPCC–Alternative 2	2-68
2.21-5	Shop Building No. 1 OPCC–Alternative 3	2-69
2.22-1	Shop Building No. 2 Current Applicable Code Review	2-71
2.22-2	Shop Building No. 2 System Airflow Review	2-71
2.22-3	Shop Building No. 2 OPCC	2-72
2.23-1	Sludge Control Building No. 2 Current Applicable Code Review	2-74
2.23-2	Sludge Control Building No. 2 Equipment Airflow Review	2-75
2.23-3	Sludge Control Building No. 2 Space Airflow Review	2-76
2.23-4	Sludge Control Building No. 2 OPCC–Option 1	2-77
2.23-5	Sludge Control Building No. 2 OPCC–Option 2	2-78
2.23-6	Sludge Control Building No. 2 OPCC–Option 3	2-79
2.23-7	Sludge Control Building No. 2 OPCC–Option 4	2-80
2.24-1	Sludge Dewatering Building Current Applicable Code Review	2-81
2.24-2	Sludge Dewatering Building System Airflow Review	2-82
2.24-3	Sludge Dewatering Building OPCC	2-83
2.25-1	Solids Gallery Current Applicable Code and Standards	2-84
2.25-2	Solids Gallery Airflow Review	2-85
2.25-3	Solids Gallery OPCC	2-86
2.26-1	Storage Building No. 2 Current Applicable Code Review	2-87
2.26-2	Storage Building No. 2 System Airflow Review	2-87
2.26-3	Storage Building No. 2 OPCC	2-88
2.27-1	Storage Building No. 3 Current Applicable Code Review	2-89
2.27-2	Storage Building No. 3 System Airflow Review	2-90
2.27-3	Storage Building No. 3 OPCC	2-90
2.28-1	Electrical Building U1 System Airflow Review	2-91
2.28-2	Electrical Building U1 OPCC	2-92
2.29-1	Electrical Building U15 System Airflow Review	2-93
2.29-2	Electrical Building U15 OPCC	2-94
2.30-1	Vehicle Storage Building Current Applicable Code Review	2-96
2.30-2	Vehicle Storage Building System Airflow Review	2-96
2.30-3	Vehicle Storage Building OPCC–Option 1	2-97

TABLE OF CONTENTS Continued

		Page No. or Following
2.30-4	Vehicle Storage Building OPCC–Option 2	2-98
2.30-5	Vehicle Storage Building OPCC–Option 3	2-99
2.31-1	West Aeration Gallery Current Applicable Code and Standards	2-100
2.31-2	West Aeration Gallery Airflow Review	2-101
2.31-3	West Aeration Gallery OPCC	2-102
2.32-1	West Primary Gallery Current Applicable Code and Standards	2-103
2.32-2	West Primary Gallery System Airflow Review	2-103
2.32-3	West Primary Gallery OPCC	2-104
2.33-1	Improvements and OPCC Summary Table	2-106
2.34-1	Improvements and OPCC Priority Table	2-108
2.35-1	Improvements Energy Consumption Review	2-110
2.35-2	Energy Review Summary	2-113

FIGURES

1.05-1	Cost Estimate Classification Matrix for Process Industries	1-3
2.00-1	Nine Springs Site Plan–North	2-1
2.00-2	Nine Springs Site Plan–South	2-2
2.13-1	Example Airlock	2-40

EXECUTIVE SUMMARY

EXECUTIVE SUMMARY

The Madison Metropolitan Sewerage District (MMSD) Heating, Ventilation, and Air Conditioning (HVAC) Study is an evaluation of existing HVAC systems and equipment for 32 buildings at the Nine Springs Treatment Plant. The study is intended to provide MMSD with an overview of existing HVAC system conditions, understanding of compliance with current applicable codes and standards with respect to ventilation, and recommendations for HVAC system improvements.

The structures included in the study are from various eras of construction. More issues were identified with the earliest eras of construction because at the time many of the current codes and standards were not in effect. The study reviews each building to identify where improvements can be made to aid ventilation performance and comply with current codes and standards. In some instances, the recommended improvements involve relocating equipment or partitioning spaces. The study includes an explanation of the methodology used, the codes considered, recommended improvements, cost opinions, and prioritization of improvements.

The following table summarizes the cost opinions of those improvements by priority.

	Total of Cost Opinion
Priority I Improvements	$3,876,000
Priority II Improvements	$3,697,000
Priority III Improvements	$3,482,000
Total	**$11,055,000**

Table ES.00-1 Cost Opinions by Priority

All costs are based on 2020 dollars. A complete breakdown of the recommended improvements and the order of priority can be found at the back of the report in Tables 2.33-1 and 2.34-1

SECTION 1
INTRODUCTION

1.01 BACKGROUND

Strand Associates, Inc.® (Strand) was hired by Madison Metropolitan Sewerage District (MMSD) to evaluate existing heating, ventilation, and air conditioning (HVAC) systems for a majority of the buildings at the Nine Springs Treatment Plant. This report does not include an evaluation of pumping stations or buildings that are not part of the Nine Springs Treatment Plant. This report consists of documenting existing equipment conditions, review of current HVAC systems for appropriate design intent, and review of HVAC existing ventilation rates. This study will assist MMSD with identifying deficiencies in the current ventilation systems and provide potential alternatives to improve system performance. The study will also assist with the development of a plan to prioritize future HVAC system upgrades.

1.02 METHODOLOGY

Strand completed an on-site conditions and operations assessment of the HVAC equipment and facilities at the site in October and December 2020. These site visits consisted of building-by-building assessments. All spaces within the applicable buildings were investigated to gather information on existing ventilation equipment and an understanding of the current space layout and HVAC system layout. At the time of the assessment, where possible, equipment nameplate information and condition was documented. Because of the age of the equipment, the nameplate information was often missing or illegible. During the on-site assessment, there were discussions with MMSD staff regarding ongoing issues and concerns with the HVAC and utility systems. Information obtained during the on-site assessment was compared with existing drawings and documentation provided by MMSD. This information is the basis for the items in this study.

The systems were reviewed for compliance with current applicable codes. The systems were also reviewed for opportunities to improve HVAC system layout and function. Where a deficiency or concern was identified, an improvement is recommended.

The proposed improvements were reviewed and discussed with the facility engineering and maintenance staff. Strand incorporated comments from and worked with MMSD to prioritize the proposed improvements.

This evaluation did not include a quantitative measurement of the existing equipment operating parameters. In many instances, the proposed improvements discussed in the following will benefit from additional testing or preliminary design before proceeding with a detailed design to confirm and quantify any assumptions.

1.03 CODE REVIEW

In many cases where the HVAC systems and equipment were initially installed, there were few codes or standards that governed ventilation systems and design. It is assumed the existing HVAC systems were designed and installed to meet the applicable codes at the time of installation. Today, there are often multiple codes and standards that govern the ventilation rates, ancillary sensing equipment, and ventilation strategies. The study will provide a review of how the existing systems compare with the current codes and standards.

For buildings that contain process equipment, the governing code in the State of Wisconsin is NR 110–Sewerage Systems. A common industry standard used to define ventilation and electrical classification ratings (i.e. Class 1 Division 1, Corrosive, etc.) for process spaces is National Fire Protection Association (NFPA) 820–Standard for Fire Protection in Wastewater Treatment and Collection Facilities. Where applicable, both of these will be referenced in the following review. Process spaces are required to meet appropriate air change rates to obtain certain electrical hazard ratings.

If the building does not have process equipment, it is subject to the applicable sections of the Wisconsin Commercial Building Code. Non-process spaces are often required to meet ventilation metrics other than air change rates such as cfm per square foot or cfm per a fixture, etc.

Existing drawings and field measurements were used to calculate areas and volumes of spaces. Where applicable, these areas and volumes were used to determine the code-required airflow rates.

1.04 AMERICAN SOCIETY OF HEATING, REFRIGERATION, AND AIR CONDITIONING ENGINEERS (ASHRAE) EQUIPMENT SERVICE LIFE

During review of the existing equipment, the following service life estimates are used as part of the discussion for replacement of equipment and systems:

- Air handling units (AHUs)–15 years
- Air cooled condensers–20 years
- Air cooled chillers–20 years
- Burners–21 years
- Ductwork–30 years
- Exhaust fans (centrifugal)–25 years
- Exhaust fans (axial)–20 years
- Exhaust fans (propeller)–15 years
- Exhaust fans (roof-mounted)–20 years
- Unit heaters (gas or electric)–13 years
- Unit heaters (hot water)–20 years

The above life expectancies are published by ASHRAE and are considered standards of the industry for equipment assessments.

1.05 BASIS OF COST OPINIONS

The opinion of costs included within the study are based on information obtained in late 2020 and early 2021. Any projects budgeted from this study will need to consider current market influences and inflation based on the intended time the project will be designed and installed.

To develop budgetary costs, Strand used equipment vendors to obtain budgetary quotations based on preliminarily selected ventilation equipment. Demolition and installation costs are based on system type installation factors and historical data of similar projects. Each proposed improvement was reviewed individually to understand the construction elements associated with the proposed improvement. In some instances, installation factors were adjusted to best align with the construction elements involved. The

budgetary costs reflect the piping, electrical, controls, etc. we understand to be required to deliver a complete installation. The opinion of probable construction cost (OPCC) is defined in each of the individual building sections of this study.

These OPCCs provided are based on basic feasibility concepts and have a low expected accuracy range. These OPCCs would be considered Class 4 cost opinions based on the recommended practices developed by the American Association of Cost Engineers (AACE). Based on the guideline produced by AACE, a Class 4 cost opinion is a 1 to 15 percent level of project definition typically used in the development of feasibility studies and has an expected accuracy range of -30 percent to 50 percent. See Figure 1.05-1 for further information on cost classifications as defined by AACE.

	Primary Characteristic	*Secondary Characteristic*			
ESTIMATE CLASS	**LEVEL OF PROJECT DEFINITION** Expressed as % of complete definition	**END USAGE** Typical purpose of estimate	**METHODOLOGY** Typical estimating method	**EXPECTED ACCURACY RANGE** Typical variation in low and high ranges [a]	**PREPARATION EFFORT** Typical degree of effort relative to least cost index of 1 [b]
Class 5	0% to 2%	Concept Screening	Capacity Factored, Parametric Models, Judgment, or Analogy	L: -20% to -50% H: +30% to +100%	1
Class 4	1% to 15%	Study or Feasibility	Equipment Factored or Parametric Models	L: -15% to -30% H: +20% to +50%	2 to 4
Class 3	10% to 40%	Budget, Authorization, or Control	Semi-Detailed Unit Costs with Assembly Level Line Items	L: -10% to -20% H: +10% to +30%	3 to 10
Class 2	30% to 70%	Control or Bid/ Tender	Detailed Unit Cost with Forced Detailed Take-Off	L: -5% to -15% H: +5% to +20%	4 to 20
Class 1	50% to 100%	Check Estimate or Bid/Tender	Detailed Unit Cost with Detailed Take-Off	L: -3% to -10% H: +3% to +15%	5 to 100

Source: AACE International

Figure 1.05-1 Cost Estimate Classification Matrix for Process Industries

1.06 PRIORITIZATION

One of the objectives of this study is to assist with priority identification for implementing improvements. The proposed improvements were reviewed based on operational deficiencies and code deficiencies. Based on these elements, the proposed improvements were filtered into three different priority levels.

1. Priority I–This designation is given to critical items that need to be addressed to satisfy current code requirements, improve personnel safety, or creates conditions detrimental to existing equipment.

2. Priority II–This designation is given to identified operational deficiencies. Priority II items represent an improvement that is recommended for operational efficiency, but may not be required by code.

3. Priority III–This designation is given to non-critical systems. Priority III items represent an improvement that may be beneficial to MMSD, but is not required by a code.

1.07 ABBREVIATIONS

AACE	Association of Cost Engineers
ACH	air changes per hour
AHU	air handling unit
ASHRAE	American Society of Heating, Refrigeration, and Air-Conditioning Engineers
cfm	cubic feet per minute
cfm/sf	cubic feet per minute per square foot
CO	carbon dioxide
DAF	dissolved air floatation
EUH	electric unit heater
GBT	gravity belt thickener
HMI	Human Machine Interface
HVAC	heating, ventilation, and air conditioning
IFC	International Fire Code
MAU	make-up air unit
MCC	motor control center
MMSD	Madison Metropolitan Sewerage District
NA	not applicable
NFPA	National Fire Protection Association
NO_2	nitrogen dioxide
NR	not required
OPCC	opinion of probable construction cost
SPS	Wisconsin Department of Safety and Professional Services
Strand	Strand Associates, Inc.®
UH	Unit Heater
UV	ultraviolet
VFD	variable frequency drive
WAS	waste activated sludge

SECTION 2
MMSD SITE BUILDINGS

Figure 2.00-1 Nine Springs Site Plan–North

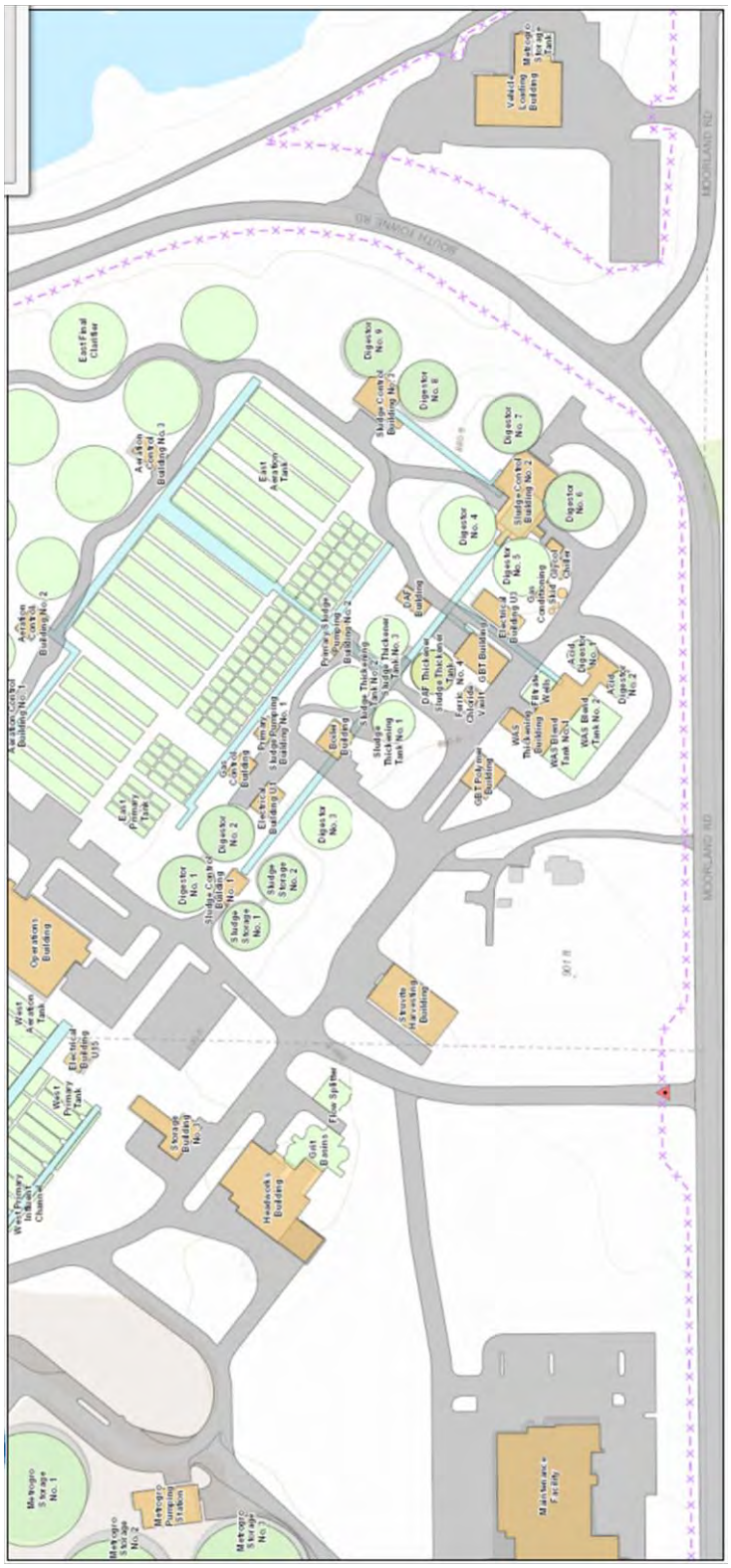

Figure 2.00-2 Nine Springs Site Plan–South

2.01 AERATION CONTROL BUILDING NO. 1

A. Existing Equipment and Observations

The building has at-grade and belowgrade levels, which are open to one another. The ground level has electrical equipment and control panels, as well as a backflow preventer and sink. The lower level has sludge pumps and conveyance piping. The equipment and piping within the building appeared to be in fair condition with no major signs of corrosion or degradation.

The building has no heating equipment other than a small portable electric unit heater (EUH).

There are two gravity roof ventilators with manually operated dampers.

B. Current Applicable Code and Standards

Table 2.01-1 provides a summary of the spaces and the applicable code and/or standard that govern the system design.

Space	Ventilation Requirements	Code/Standard Reference	Remarks
Lower Level	6 ACH continuous	NFPA 820 Table 9.1.1.1.1 Row 2c/ NR 110.14 (3)(c)(6)	Ventilation at this rate results in the space being unclassified (assumes NFPA guidelines are followed). This space is considered a belowgrade dry well, which is what drives the ventilation requirement.
Ground Level	6 ACH continuous	NFPA 820 Table 9.1.1.1.1 Row 2c/ NR 110.14 (3)(c)(6)	Because the ground level is open to the lower level, these spaces are treated as having the same classification.

ACH=air changes per hour

Table 2.01-1 Aeration Control Building No. 1 Current Applicable Code Review

C. System Airflow Review

Table 2.01-2 shows discrepancies between the current applicable code and the current airflow and ventilation rates.

Space	Existing Ventilation Rate (cfm)	Ventilation Requirements (cfm)	Remarks
Lower Level	0	930	Space does not meet requirements.
Ground Level	0	900	Space does not meet requirements.

cfm=cubic feet per minute

Table 2.01-2 Aeration Control Building No. 1 System Airflow Review

D. Proposed System Improvements

1. Providing Required Ventilation, Summer Cooling, and Winter Heating

Strand recommends providing a new natural gas-fired or hot water make-up air unit (MAU) that supplies air to the upper level and a new exhaust fan that draws air from the upper and lower level. The increased airflow will also assist with removing heat from the upper level during the summer and providing heat in the winter to aid in preventing water pipes from freezing. Additionally, Strand recommends replacing the existing windows with more thermally efficient and better sealing windows. Lastly, Strand recommends all new equipment be provided with the ability to be remotely monitored.

The opinion of cost for this improvement is detailed in Table 2.01-3.

Equipment and Materials		
MAU (Quantity–1)	$	10,000
Exhaust Fans (Quantity–1)	$	2,000
Ductwork and Accessories	$	7,500
Subtotal Equipment	$	20,000
Mechanical Installation	$	60,000
Belowgrade Natural Gas Piping	$	20,000
Temperature Controls	$	5,000
Electrical	$	30,000
Miscellaneous (Building Modifications)	$	5,000
Subtotal Base Construction	**$**	**140,000**
Contractor General Conditions	$	21,000
Engineering	$	28,000
Contingencies (25%)	$	35,000
OPCC	**$**	**224,000**

Table 2.01-3 Aeration Control Building No. 1 OPCC

2.02 AERATION CONTROL BUILDING NO. 2

A. Existing Equipment and Observations

The building has at-grade and belowgrade levels, which are open to one another. Windows in the space are past their useful life. The ground level has electrical equipment (including variable frequency drives [VFDs]), a sampler, and a sink. The lower level has sludge pumps and conveyance piping. The lower level is connected to the East Aeration Gallery. There is no door or partition separating the lower level of the building from the gallery. The equipment and piping within the building appears to be in fair condition with no major signs of corrosion or degradation.

The building has no heating equipment other than a small portable EUH.

The grade level has two gravity roof ventilators with manually operated dampers.

B. Current Applicable Code and Standards

Table 2.02-1 provides a summary of the spaces and the applicable code and/or standard that govern the system design.

Space	Ventilation Requirements	Code/Standard Reference	Remarks
Lower Level	6 ACH continuous	NFPA 820 Table 9.1.1.1.1 Row 2c/ NR 110.14 (3)(c)(6)	Ventilation at this rate results in the space being unclassified (assumes NFPA guidelines are followed). This space is considered a belowgrade dry well, which is what drives the ventilation requirement.
Ground Level	6 ACH continuous	NFPA 820 Table 9.1.1.1.1 Row 2c/ NR 110.14 (3)(c)(6)	Because the ground level is open to the lower level, these spaces are treated as having the same classification.

Table 2.02-1 Aeration Control Building No. 2 Current Applicable Code Review

C. System Airflow Review

Table 2.02-2 shows discrepancies between the current applicable code and the current airflow and ventilation rates.

Space	Existing Ventilation Rate (cfm)	Ventilation Requirements (cfm)	Remarks
Lower Level	0	2,320	Space does not meet requirements.
Ground Level	0	2,000	Space does not meet requirements.

Table 2.02-2 Aeration Control Building No. 2 System Airflow Review

D. Proposed System Improvements

One item to acknowledge is the connection of this structure to the East Aeration Gallery. Based on Strand's interpretation of NFPA 820, Strand does not think it is necessary to provide doors to separate this building from the gallery. Therefore, this was not suggested as an improvement.

1. Providing Required Ventilation, Summer Cooling, and Winter Heating

Similar to Aeration Control Building No. 1, this area is not provided ventilation in line with requirements. To meet those requirements, Strand recommends providing a new natural gas-fired or hot water MAU that supplies air to the upper level and a new exhaust fan that draws air from the upper and lower levels. The increased airflow will also assist with removing heat from the upper level during the summer and providing heat in the winter to aid in preventing water pipes from freezing. Additionally, Strand recommends replacing the existing windows with more thermally efficient and better sealing windows. Lastly, Strand recommends all new equipment be provided with the ability to be remotely monitored.

The opinion of cost for this improvement is detailed in Table 2.02-3.

Equipment and Materials		
MAU (Quantity–1)	$	10,000
Exhaust Fans (Quantity–1)	$	2,000
Ductwork and Accessories	$	7,500
Subtotal Equipment	$	20,000
Mechanical Installation	$	60,000
Belowgrade Natural Gas Piping	$	20,000
Temperature Controls	$	5,000
Electrical	$	30,000
Miscellaneous (building modifications)	$	5,000
Subtotal Base Construction	**$**	**140,000**
Contractor General Conditions	$	21,000
Engineering	$	28,000
Contingencies (25%)	$	35,000
OPCC	**$**	**224,000**

Table 2.02-3 Aeration Control Building No. 2 OPCC

2.03 AERATION CONTROL BUILDING NO. 3

A. Existing Equipment and Observations

The building has at-grade and belowgrade levels, which are open to one another. The ground level has electrical equipment and control panels (including VFDs), samplers, and a utility sink. The lower level has sludge pumps and conveyance piping. Similar to Aeration Control Building No. 2, the lower level is connected to the East Aeration Gallery . There is no door or partition separating the lower level of the building from the gallery. The equipment and piping within the space appears to be in fair condition with no major signs of corrosion or degradation.

On the ground level, there are two small louvers. The louvers are directly ducted to an EUH. In the ductwork between the EUH and the louver, there is a bypass damper in the bottom of the duct to recirculate air to the space. There is also a roof-mounted exhaust fan. The EUH is in good condition. The exhaust fan is operational, but in fair condition. The lower level has an additional pump room, which is ventilated by an exhaust fan mounted at-grade. The fan is operational, but serving past its typical service life.

Based on the quantity of pumps, motor control centers (MCC), VFDs, and transformers, there is likely a large heat gain from equipment in the space during the summer.

B. Current Applicable Code and Standards

Table 2.03-1 provides a summary of the spaces and the applicable code and/or standard that govern the system design.

Space	Ventilation Requirements	Code/Standard Reference	Remarks
Lower Level	6 ACH continuous	NFPA 820 Table 9.1.1.1.1 Row 2c/ NR 110.14 (3)(c)(6)	Ventilation at this rate results in the space being unclassified (assumes NFPA guidelines are followed). This space is considered a below grade dry well, which is what drives the ventilation requirement.
Ground Level	6 ACH continuous	NFPA 820 Table 9.1.1.1.1 Row 2c/ NR 110.14 (3)(c)(6)	Because the ground level is open to the lower level, these spaces are treated as having the same classification.

Table 2.03-1 Aeration Control Building No. 3 Current Applicable Code Review

C. System Airflow Review

Table 2.03-2 shows discrepancies between the current applicable code and the current airflow and ventilation rates.

Space	Existing Ventilation Rate (cfm)	Ventilation Requirements (cfm)	Remarks
Lower Level	321	1,700	Space does not meet requirements.
Ground Level	3,159	1,200	Space meets requirements.

Table 2.03-2 Aeration Control Building No. 3 System Airflow Review

D. Proposed System Improvements

One item to acknowledge is the connection of this structure to the East Aeration Gallery. Based on Strand's interpretation of NFPA 820, Strand does not think it is necessary to provide doors to separate this building from the gallery. Therefore, this was not suggested as an improvement.

1. Redistribute Airflow and Resize Ventilation Equipment

Strand suggests providing a new natural gas-fired or hot water MAU that supplies air to the upper level and a new exhaust fan that draws air from the upper and lower levels. The increased airflow will also assist with removing heat from the upper level during the summer and providing heat in the winter to aid in preventing water pipes from freezing. Lastly, Strand recommends all new equipment be provided with the ability to be remotely monitored.

The opinion of cost for this improvement is detailed in Table 2.03-3.

Equipment and Materials		
MAU (Quantity–1)	$	10,000
Exhaust Fans (Quantity–2)	$	4,000
Ductwork and Accessories	$	9,500
Subtotal Equipment	$	24,000
Mechanical Installation	$	72,000
Belowgrade Natural Gas Piping	$	25,000
Temperature Controls	$	5,000
Electrical	$	36,000
Miscellaneous (building modifications)	$	6,000
Subtotal Base Construction	**$**	**168,000**
Contractor General Conditions	$	26,000
Engineering	$	34,000
Contingencies (25%)	$	42,000
OPCC	**$**	**270,000**

Table 2.03-3 Aeration Control Building No. 3 OPCC

2.04. AERATION CONTROL BUILDING NO. 4

A. Existing Equipment and Observations

The building has at-grade and belowgrade levels, which are separated by an enclosed stairwell. The ground level consists of a control room and sample room. Heat is provided to the sample room by a hot water unit heater. There is no ventilation or cooling provided to the sample room. Within the control room there are MCCs, transformers, and control panels. The control room has an intake louver and roof mounted exhaust fan (EF-4-7) that provides ventilation. Heating is provided by two hot water unit heaters.

The Waste Activated Sludge (WAS) pump room is located below grade and connected to the West Aeration Gallery without any doors or dividers. It consists of WAS pumps, conveyance piping, and VFDs. A louver in the stairwell is interlocked with EF-4-6. EF-4-6 is controlled based on temperature. Air from the WAS pump room is exhausted by EF-4-1. The exhaust ductwork associated with EF-4-1 draws air from both near the floor and the ceiling. It appears EF-4-1 is part of the overall ventilation system that includes both the West Aeration Gallery and the WAS pump room. Further discussion about this system and recommendations are located within Section 2.31–West Aeration Gallery.

The units and associated ductwork serving these spaces appear to be in good working condition, but are nearing their typical service life.

B. Current Applicable Code and Standards

Table 2.04-1 provides a summary of the spaces and the applicable code and/or standard that govern the system design.

Space	Ventilation Requirements	Code/Standard Reference	Remarks
Sample Room	Not required	None	
Control Room	Based on cooling requirements	None	
WAS Pump Room (Lower Level)	6 ACH continuous	NFPA 820 Table 6.2.2 Row 9b/ NR 110.14 (3)(c)(6)	Ventilation at this rate results in the space being unclassified (assumes NFPA guidelines are followed). The lower level has sludge pumps and is considered a belowgrade dry well.

Table 2.04-1 Aeration Control Building No. 4 Current Applicable Code Review

C. System Airflow Review

Table 2.04-2 shows discrepancies between the current applicable code and the current airflow and ventilation rates.

Space	Existing Ventilation Rate (cfm)	Ventilation Requirements (cfm)	Remarks
Sample Room	None	N/A	-
Control Room	2,200	N/A	Ventilation requirements will be based on heat removal. Further information would need to be reviewed to confirm the existing ventilation adequately cools the space.
WAS Pump Room (Lower Level)	--	--	Refer to Section 2.31–West Aeration Gallery.

Table 2.04-2 Aeration Control Building No. 4 System Airflow Review

D. Proposed System Improvements

For improvements related to the WAS pump room, refer to Section 2.31–West Aeration Gallery. Other than the improvements listed below, the remaining equipment can be replaced in kind once it fails or requires excessive maintenance.

1. Improve Cooling for Control Room

The Control Room is currently cooled by ventilation only. An improvement would be to provide increased cooling by installing a split system with refrigerant. Any copper components would need to be coated and insulated with a vapor barrier to mitigate corrosion. This approach would have the added benefit of reducing the humidity within the space. Strand recommends all new equipment be provided with the ability to be remotely monitored.

The opinion of cost for this improvement is detailed in Table 2.04-3.

Equipment and Materials		
Fan Coil Unit and Condensing Unit (Quantity–1)	$	9,000
Ductwork and Accessories	$	5,000
Subtotal Equipment	$	14,000
Mechanical Installation	$	42,000
Temperature Controls	$	5,000
Electrical	$	21,000
Miscellaneous (building modifications)	$	4,000
Subtotal Base Construction	**$**	**86,000**
Contractor General Conditions	$	13,000
Engineering	$	18,000
Contingencies (25%)	$	22,000
OPCC	**$**	**139,000**

Table 2.04-3 Aeration Control Building No. 4 OPCC

2.05. BLOWER BUILDING NO. 1

A. Existing Equipment and Observations

The building has at-grade and belowgrade levels, both of which are open to one another. The upper level is comprised of electrical equipment, control panels, and blower and engine equipment. The lower level is divided into two areas. The newer area is connected to the East Aeration Gallery without any doors or dividers. The older area is not connected to the gallery.

In the upper level there are four air intake dampers with pneumatic actuators. There are four ceiling-mounted unit ventilators that can both intake and exhaust air from the upper level depending on the position of the dampers. There are unit heaters mounted near the ceiling. There are also air intake louvers on the exterior of the building that are for the blower air intakes and are not related to the heating and ventilating systems. Ductwork and an exhaust fan are directly connected to some of the electrical enclosures and exhausted to the exterior. There is temperature control panel for the exhaust fans and heat recovery system. The unit ventilators and exhaust fans appeared functional at the time of review but are in poor condition. The unit heaters are in poor condition and their operation could not be verified.

Both areas of the lower level are supplied with air transferred from the upper level. There are supply fans located in the upper level that draw air from the upper level and supply it to the lower level. Neither lower level area is provided with dedicated exhaust. The lower level associated with the older portion of the blower building smelled of oil at the time of Strand's review. The supply fans appear in good working condition.

B. Current Applicable Code and Standards

This building is not a building recognized as a process building by NR 110 or NFPA 820 and, therefore, has no code-required ventilation rates. Ventilation in this type of structures is driven by heat removal requirements.

C. System Airflow Review

Table 2.05-1shows discrepancies between the current applicable code and the current airflow and ventilation rates.

Space	Existing Ventilation Rate (cfm)	Ventilation Requirements (cfm)	Remarks
Upper Level	7,540	N/A	Ventilation requirements will be based on heat removal. Further information would need to be reviewed to confirm the existing ventilation adequately cools the space.
Lower Level (original)	5,000	N/A	
Lower Level (expansion)	4,500	--	Ventilation requirements will be associated with East Aeration Gallery (refer to Section 2.10–East Aeration Gallery.)

Table 2.05-1 Blower Building No. 1 System Airflow Review

D. Proposed System Improvements

The first step in designing improvements for this building would be accomplished through a full understanding of the heat generation of the blowers and electrical equipment within the space. The heat load will drive the size of the ventilation equipment.

Based on Strand's interpretation of NFPA 820, Strand does not think it is necessary to provide doors to separate this building from the East Aeration Gallery. Therefore this was not suggested as an improvement.

1. Replace and Improve Unit Ventilators and Unit Heaters

Replace the existing unit ventilators with roof-mounted exhaust fans that are controlled based on space temperature. Replace existing dampers and actuators with thermally broken dampers and electronic actuators. If necessary, provide additional louvers, dampers, and associated actuators to provide adequate ventilation. Install high-volume, low-speed destratification fans at the ceiling to help destratify the air within the space. Provide new wall-mounted unit hot water heaters. This will allow for easier maintenance access for the unit heaters. Provide upgraded controls to allow the exhaust fans to be staged as required to remove heat from the space and provide remote monitoring of equipment and space temperatures.

The opinion of cost for this improvement is detailed in Table 2.05-2

Equipment and Materials		
Roof-Mounted Exhaust Fans (Quantity–4)	$	8,000
Hot Water Unit Heaters (Quantity–6)	$	9,000
High-Volume, Low-Speed Fans (Quantity–2)	$	12,000
Subtotal Equipment	$	29,000
Mechanical Installation (includes fans, duct accessories)	$	87,000
Demolition	$	10,000
Heating Hot Water Piping	$	31,000
Temperature Controls (new panel with HMI)	$	15,000
Electrical	$	44,000
Miscellaneous (building modifications)	$	23,000
Subtotal Base Construction	**$**	**239,000**
Contractor General Conditions	$	36,000
Engineering	$	48,000
Contingencies (25%)	$	60,000
OPCC	**$**	**383,000**

HMI=Human Machine Interface

Table 2.05-2 Blower Building No. 1 OPCC–Option 1

2. Improve Ventilation for Lower Level Areas

Verify the intake louvers and dampers serving the building are sized to provide adequate ventilation to the upper and lower level. For the lower level of the older portion of the blower building, provide a new exhaust fan to draw air to the exterior. For the portion of the building connected to the East Aeration Gallery, coordinate airflow with the gallery.

The opinion of cost for this improvement is detailed in Table 2.05-3.

Equipment and Materials		
New Louver Dampers and Actuators	$	20,000
Exhaust Fans (Quantity–1)	$	7,000
Subtotal Equipment	$	27,000
Mechanical Installation	$	81,000
Demolition	$	5,000
Temperature Controls	$	5,000
Electrical	$	41,000
Miscellaneous (building modifications)	$	7,000
Subtotal Base Construction	**$**	**166,000**
Contractor General Conditions	$	25,000
Engineering	$	34,000
Contingencies (25%)	$	42,000
OPCC	**$**	**267,000**

Table 2.05-3 Blower Building No. 1 OPCC–Option 2

2.06 BLOWER BUILDING NO. 2

A. Existing Equipment and Observations

The building has at-grade and belowgrade levels. The upper level consists of three blower rooms, a control room, and a mechanical room. The lower level consists of an electrical equipment room, basement room, and filter rooms. The lower level is separated from the upper level by an enclosed stairwell. The stairwell also connects to the West Aeration Gallery. The lower level basement room is directly connected to the West Primary Gallery without any doors or partitions.

In each of the blower rooms there are ventilation supply openings in the floor. The supply duct for each blower room is served by a dedicated inline supply fan located in the lower level. The supply fans draw air from a common air shaft beneath the floor slab in the lower level, which pulls air from outside. A separate air shaft provides process air for the blowers. The exhaust from the blower rooms is accomplished by ductwork on the lower level that is directly ducted to the blower motors. Each blower motor is provided with a dedicated exhaust fan that manifolds to a common exhaust duct in the lower level. The common exhaust duct is relieved at grade through gravity vent (PE-5-1). Each blower room is provided with a dedicated hot water unit heater. The blowers, piping, supply fans, exhaust fans, and ductwork all appear to be in good working condition. There are no major signs of corrosion or equipment degradation.

The control room is served by an intake louver, exhaust fan, and hot water unit heater. The heating and ventilation equipment appears to be in good condition.

The mechanical room is served by hot water unit heater provides heat to the mechanical room. The unit heater appears to be in good condition.

The basement room in the lower level consists of blower piping and plant water equipment. The supply fans that supply air to the blower rooms also supply air to the basement room. The lower level electrical equipment room also has supply and exhaust grilles served from branch the same supply and exhaust fans that serve the blower rooms. Ventilation is currently supplied to the basement room and exhausted through the West Primary Gallery.

B. Current Applicable Code and Standards

Table 2.06-1 provides a summary of the spaces and the applicable code and/or standard that govern the system design.

Space	Ventilation Requirements	Code/Standard Reference	Remarks
Blower Rooms (Quantity–3)	Based on cooling requirements	None	
Control Room	Based on cooling requirements	None	
Mechanical Room	Not required	None	
Electrical Room (Lower Level)	Based on cooling requirements	None	
Basement Room (Lower Level)	6 ACH continuous	NFPA 820 Table 6.2.2 Row 9b/ NR 110.14 (3)(c)(6)	Ventilation at this rate results in the space being unclassified (assumes NFPA guidelines are followed). The lower level is connected to the West Primary Gallery, which has sludge pumps and is considered a belowgrade dry well.

Table 2.06-1 Blower Building No. 2 Current Applicable Code Review

C. System Airflow Review

Table 2.06-2 shows discrepancies between the current applicable code and the current airflow and ventilation rates.

Space	Existing Ventilation Rate (cfm)	Ventilation Requirements (cfm)	Remarks
Blower Rooms (Quantity–3)	5,500 per room	N/A	Ventilation requirements will be based on heat removal. Further information would need to be reviewed to confirm the existing ventilation adequately cools the space.
Control Room	2,000	N/A	Ventilation requirements will be based on heat removal. Further information would need to be reviewed to confirm the existing ventilation adequately cools the space.
Mechanical Room	None	N/A	
Electrical Room (Lower Level)	800	N/A	Ventilation requirements will be based on heat removal. Further information would need to be reviewed to confirm the existing ventilation adequately cools the space.
Basement Room (Lower Level)	8,400	6,500	The quantity of supply air meets requirements. The noted ventilation requirement includes the Basement Room and West Primary Gallery. Refer to Section 2.32–West Primary Gallery for additional information.

Table 2.06-2 Blower Building No. 2 System Airflow Review

D. Proposed System Improvements

Before starting any detailed design, it first needs to be understood the static pressure drop through the supply fans to the blower rooms when the blower equipment is running. This can be accomplished by a balancer performing preliminary review of the system.

1. Reduce Equipment and Separate Ventilation of Basement and Blower Rooms

The existing system is complex with multiple supply and exhaust fans and various interconnecting ductwork. As designed, the system works, but when equipment begins to fail or begins to require excessive maintenance, Strand recommends the following.

a. Remove the three supply fans serving the blower rooms. Resize the exhaust fans to include enough static pressure to eliminate the need for the supply fans and instead draw air through the supply ductwork.

b. Provide one supply fan sized to serve the basement room and the electrical room. Size this fan to provide 6 ACH for the basement room, west primary gallery, and cooling air for the electrical room. Operate this fan continuously and in conjunction with the exhaust from the West Primary Gallery. Depending on the ventilation calculations, it may be necessary to provide hot water heating to temper the air serving the basement room.

New fans and equipment shall be provided with the capability to be monitored remotely.

The opinion of cost for this improvement is detailed in Table 2.06-3.

Equipment and Materials		
Exhaust Fans (Quantity–4)	$	14,000
Ductwork and Accessories	$	10,000
Subtotal Equipment	$	24,000
Mechanical Installation	$	72,000
Demolition	$	10,000
Temperature Controls (new panel with HMI)	$	15,000
Electrical	$	36,000
Miscellaneous (building modifications)	$	6,000
Subtotal Base Construction	**$**	**163,000**
Contractor General Conditions	$	25,000
Engineering	$	33,000
Contingencies (25%)	$	41,000
OPCC	**$**	**262,000**

Table 2.06-3 Blower Building No. 2 OPCC

2.07 BOILER BUILDING

A. Existing Equipment and Observations

The building consists of three heating hot water boilers and associated pumps. Intake louvers in the boiler room provide combustion air for the boilers. There is currently a roof-mounted exhaust fan intended to remove heat from the space.

The stairwell leading down to the Solids Gallery has a separate exterior entrance and is not open to the boiler room. There is an inline exhaust fan that discharges out a sidewall in the stairwell. Equipment within both rooms appears to be in in good condition and no issues are apparent.

B. Current Applicable Code and Standards

Table 2.07-1 provides a summary of the spaces and the applicable code and/or standard that govern the system design.

Space	Ventilation Requirements	Code/Standard Reference	Remarks
Boiler Room	Based on cooling requirements	None	-
Stairwell	--	--	Stairwell is connected to Solids Gallery and considered part of the Solids Gallery (refer to Section 2.25–Solids Gallery).

Table 2.07-1 Boiler Building Current Applicable Code Review

C. System Airflow Review

Table 2.07-2 shows discrepancies between the current applicable code and the current airflow and ventilation rates.

Space	Existing Ventilation Rate (cfm)	Ventilation Requirements (cfm)	Remarks
Boiler Room	3,200	--	Ventilation requirements will be based on heat removal.
Stairwell	--	--	Refer to Section 2.25–Solids Gallery for additional information.

Table 2.07-2 Boiler Building System Airflow Review

D. Proposed System Improvements

1. Boiler Room Heat Removal Improvements

During summer, the space temperature within the boiler room may become elevated and make the space difficult to work in. While there are several existing louvers serving the space, the air drawn through these louvers is used for the boiler combustion and some portion for heat removal. Increasing the size of the roof-mounted exhaust fan and air intake to help remove excess heat from the space would be beneficial during summer months. However, it would be important to coordinate the ventilation intake for this fan as varying the air pressure withing the space can have negative impacts on the boiler combustion process.

The opinion of cost for this improvement is detailed in Table 2.07-3.

Equipment and Materials		
Exhaust Fans (Quantity–1)	$	5,000
Gravity Intake (Quantity–1)	$	3,500
Ductwork, Damper, Actuator	$	3,000
Subtotal Equipment	$	12,000
Mechanical Installation	$	36,000
Temperature Controls	$	2,000
Electrical	$	18,000
Miscellaneous (building modifications)	$	5,000
Subtotal Base Construction	**$**	**73,000**
Contractor General Conditions	$	11,000
Engineering	$	15,000
Contingencies (25%)	$	19,000
OPCC	**$**	**118,000**

Table 2.07-3 Boiler Building OPCC

2.08. DISSOLVED AIR FLOATATION (DAF) BUILDING

A. Existing Equipment and Observations

This building has a partial upper level at-grade and a belowgrade level, which are open to each other. The lower level is connected to the Solids Gallery with doors separating the building from the gallery. The building is heated with hot water unit heaters that are functional but showing signs of corrosion. There is a large wall-mounted exhaust fan and intake louvers on the upper level. Equipment in this building appears in acceptable condition, but is past its typical equipment service life and showing signs of degradation.

B. Current Applicable Code and Standards

Table 2.08-1 provides a summary of the spaces and the applicable code and/or standard that govern the system design.

Space	Ventilation Requirements	Code/Standard Reference	Remarks
Mechanical Room	6 ACH continuous	NFPA 820 Table 9.1.1.1.1 Row 2c/ NR 110.14 (3)(c)(6)	Ventilation at this rate results in the space being unclassified (assumes NFPA guidelines are followed). This space is considered a belowgrade dry well, which is what drives the ventilation requirement.

Table 2.08-1 DAF Building Current Applicable Code Review

C. System Airflow Review

Table 2.08-1 shows discrepancies between the current applicable code and the current airflow and ventilation rates.

Space	Existing Ventilation Rate (cfm)	Ventilation Requirements (cfm)	Remarks
Mechanical Room	--	1,500	Existing ventilation data is not available. Existing exhaust fan appears to be capable of airflow in excess of the required continuous airflow.

Table 2.08-2 DAF Building System Airflow Review

D. Proposed System Improvements

As mentioned previously, the existing exhaust fan appears capable of moving more air than what is required for continuous ventilation. Although continuous ventilation is the preferred recommendation, this space may be designed to take advantage of the intermittent ventilation provisions listed within NR 110. If MMSD decides to investigate intermittent ventilation, Strand recommends reviewing the size of the existing exhaust fan and providing thermally broken dampers and new actuators. The following improvement relates to continuous ventilation

1. Provide Required Ventilation

Strand recommends providing a new natural gas-fired or hot water MAU that supplies air to the upper level and a new exhaust fan that draws air from the upper and lower level. Strand also recommends all new equipment be provided with the ability to be remotely monitored.

The opinion of cost for this improvement is detailed in Table 2.08-3.

Equipment and Materials		
MAU (Quantity–1)	$	10,000
Exhaust Fans (Quantity–1)	$	2,000
Ductwork and Accessories	$	7,500
Subtotal Equipment	$	20,000
Mechanical Installation	$	60,000
Heating Hot Water Piping	$	19,800
Temperature Controls	$	5,000
Electrical	$	30,000
Miscellaneous (building modifications)	$	5,000
Subtotal Base Construction	**$**	**140,000**
Contractor General Conditions	$	21,000
Engineering	$	28,000
Contingencies (25%)	$	35,000
OPCC	**$**	**224,000**

Table 2.08-3 DAF Building OPCC

2.09 DAF THICKENER

A. Existing Equipment and Observations

This is a small walk-in enclosure connected to a dome covering the thickener tank. The space is humid and noxious. There is an exhaust fan at the top of the dome, which appears difficult to access. There is also an exhaust fan located within the walk-in enclosure at-grade that serves the Solids Gallery below. The walk-in enclosure is open to the dome.

The exhaust fan at the top of the dome did not appear operational at the time of review. The exhaust fan serving the Solids Gallery was operational but is serving beyond its typical service life.

B. Current Applicable Code and Standards

Table 2.09-1 provides a summary of the spaces and the current applicable code and or standards.

Space	Ventilation Requirements	Code/Standard Reference	Remarks
DAF Enclosure	6 ACH continuous	NFPA 820 6.2.2 Row 8c	Ventilation at this rate results in the space being unclassified. There is a clarification in NFPA 820 that ventilation at 6 ACH only results in the space being unclassified if the "process is proceeded by primary treatment with skimming."

Table 2.09-1 DAF Thickener Current Applicable Code and Standards

C. System Airflow Review

Table 2.09-2 shows discrepancies between the current applicable code and the current airflow and ventilation rates.

Space	Existing Ventilation Rate (cfm)	Ventilation Requirements (cfm)	Remarks
DAF Enclosure	--	TBD	The space is not normally occupied and the electrical devices within the space appear to currently be Class I Division 1 rated. Need to consider if it makes sense to ventilate this structure.

Table 2.09-2 DAF Thickener System Airflow Review

D. Proposed System Improvements

An enclosed tank with an open water surface is always going to lead to high levels of humidity and trapped off gassing within the space. If the tank is to remain enclosed, the following are some potential improvements.

1. Airflow Improvements

A potential improvement is to replace the exhaust fan located at the top of the dome with a gravity roof ventilator and backdraft damper and install two or more supply fans at grade around the perimeter of the dome. The new fans would route ductwork through the existing at grade openings in the side of the dome, and provide ductwork diffusers within the dome to force air over the open water surface. Installing fans at-grade will permit access to the equipment without needing to go on top of the dome. Additionally, if there are concerns about odors, these fans can be put on a VFD to aid in balancing. The VFD would not actively modulate, but rather be used to manually adjust the speed.

Additionally, Strand recommends installing a door between the walk-in area and the domed area. This would allow the fans to positively pressurize the domed area and relieve out the gravity vent at the top of the dome.

Lastly Strand recommends to relocate the fan serving the Solids Gallery within the walk-in area to outside the walk-in enclosure. Strand recommends all new equipment be provided with the ability to be remotely monitored.

The opinion of cost for this improvement is detailed in Table 2.09-3.

Equipment and Materials		
Gravity Roof Ventilator (Quantity–1)	$	1,500
Exhaust Fans (Quantity–2)	$	4,500
Ductwork	$	6,000
Dampers and Actuators	$	3,300
Subtotal Equipment	$	16,000
Mechanical Installation	$	48,000
Temperature Controls	$	2,000
Electrical	$	49,000
Miscellaneous (building modifications)	$	6,000
Subtotal Base Construction	**$**	**121,000**
Contractor General Conditions	$	19,000
Engineering	$	25,000
Contingencies (25%)	$	31,000
OPCC	**$**	**196,000**

Table 2.09-3 DAF Thickener OPCC

2.10. EAST AERATION GALLERY

A. Existing Equipment and Observations

The East Aeration Gallery connects directly to Blower Building No. 1, Aeration Control Building No. 2, and Aeration Control Building No. 3, and has a connecting gallery to the East Primary Gallery. The connection to the East Primary Gallery is separated by a door. In general, the piping within the gallery appears in good condition. There was not any noticeable pooled water and there were no noticeable noxious odors at the time of Strand's review.

It is Strand's understanding the East Aeration Gallery does not contain any sludge gas or natural gas piping.

There are three exhaust fans specifically dedicated to serving this area. At the time of review, only two of the fans were operating. It appears the intent is to draw air from Blower Building No. 1 through the length of the gallery, but it is more likely air is short circuiting this pathway and instead being drawn from other sources of infiltration.

B. Current Applicable Code and Standards

Table 2.10-1 provides a summary of the spaces and the current applicable code and or standards.

Space	Ventilation Requirements	Code/Standard Reference	Remarks
Gallery	6 ACH continuous	NFPA 820 6.2.2Row 9b/ NR 110.14 (3)(c)(6)	Ventilation at this rate results in the space being unclassified (assumes NFPA guidelines are followed). Because this space is open and connected to the Aeration Building dry wells, this space is considered an extension of those dry wells and is ventilated at the same rate.

Table 2.10-1 East Aeration Gallery Current Applicable Code and Standards

C. System Airflow Review

Table 2.10-2 notes discrepancies between the current applicable code and the current airflow and ventilation rates.

Space	Existing Ventilation Rate (cfm)	Ventilation Requirements (cfm)	Remarks
Gallery	5,192	16,500	Does not meet requirements

Table 2.10-2 East Aeration Gallery Airflow Review

D. Proposed System Improvements

1. Increase Airflow

Replace the three existing exhaust fans with new upsized fans. From a supply air perspective, this design should be coordinated with the air supply from Blower Building No. 1. Strand recommends any new equipment be provided with the ability to be remotely monitored.

The opinion of cost for this improvement is detailed in Table 2.10-3.

Equipment and Materials		
Exhaust Fans (Quantity–3)	$	12,000
Damper and Actuator	$	1,500
Subtotal Equipment	$	14,000
Mechanical Installation	$	42,000
Temperature Controls	$	3,000
Electrical	$	31,000
Miscellaneous (building modifications)	$	4,000
Subtotal Base Construction	**$**	**94,000**
Contractor General Conditions	$	15,000
Engineering	$	19,000
Contingencies (25%)	$	24,000
OPCC	**$**	**152,000**

Table 2.10-3 East Aeration Gallery OPCC

2.11 EAST PRIMARY GALLERY

A. Existing Equipment and Observations

This gallery is connected to the East Aeration Gallery. There is a door separating the galleries. This gallery is also connected to Primary Sludge Pumping Station Nos.1 and 2 and the Gas Control Building without any doors separating these areas.

There are two blower type fans located within the East Primary Gallery as well as a small fan located at-grade on the west end of the gallery. The fan at the far west end was not operational, and the other two fans serving this space were functional but are showing signs of corrosion and deterioration.

The piping within the gallery appears in fair condition and shows signs of deterioration in line with its age. Some locations of the gallery appeared damp, with standing water and some stronger odors were noticeable.

B. Current Applicable Code and Standards

Table 2.11-1 provides a summary of the spaces and the current applicable code and or standards.

Space	Ventilation Requirements	Code/Standard Reference	Remarks
Gallery	6 ACH continuous	NFPA 820 6.2.2Row 9b/ NR 110.14 (3)(c)(6)	Ventilation at this rate will result in the space being unclassified (assumes NFPA guidelines are followed). Because the gallery is directly connected to the primary sludge pumping stations, the gallery is treated as an extension of the pumping station and is considered a belowgrade dry well.

Table 2.11-1 East Primary Gallery Current Applicable Code and Standards

C. System Airflow Review

Table 2.11-2 notes discrepancies between the current applicable code and the current airflow and ventilation rates.

Space	Existing Ventilation Rate (cfm)	Ventilation Requirements (cfm)	Remarks
Gallery	1,572	3,000	At the current airflow rate the space is considered Class I Division 2. Ventilation at the required rate will result in the space being unclassified (assumes NFPA guidelines are followed).

Table 2.11-2 East Primary Gallery System Airflow Review

D. Proposed System Improvements

The following proposed improvement is best implemented in conjunction with the proposed improvements for Primary Sludge Pumping Building No. 1 and No.2 and the Gas Control Building. See the applicable sections for details on the other proposed improvements.

1. Improved Ventilation Equipment

Replace the existing utility fans located within the gallery with new fans located at grade. The new fans would have increased airflow to provide the recommended 6 ACH. This will remove the exhaust fans from the gallery, which will help to extend the life of the equipment. Strand recommends all new equipment be provided with the ability to be remotely monitored.

The opinion of cost for this improvement is detailed in Table 2.11-3.

Equipment and Materials		
Exhaust Fans (Quantity–3)	$	6,000
Damper and Actuator	$	1,500
Subtotal Equipment	$	8,000
Mechanical Installation	$	24,000
Temperature Controls	$	3,000
Electrical	$	22,000
Miscellaneous (building modifications)	$	2,000
Subtotal Base Construction	**$**	**59,000**
Contractor General Conditions	$	9,000
Engineering	$	12,000
Contingencies (25%)	$	15,000
OPCC	**$**	**95,000**

Table 2.11-3 East Primary Gallery OPCC

2.12 EFFLUENT BUILDING

A. Existing Equipment and Observations

The building is broken into two main areas. One area contains the ultraviolet (UV) channels and the other area contains the effluent pumps. Adjoining the UV channel area is a variety of rooms such as laboratories, control rooms, and sample rooms. Some of these rooms appeared to not be used for their original intent. The structure is generally a large open space and primarily above grade.

There are extensive amounts of ductwork and exhaust fans serving the building. A vast majority of the systems and ductwork are interconnected with dampers, booster fans, and relief vents. Existing controls are a mixture of pneumatic and electronic controllers. Heat is provided by hot water that is generated by boilers in Shop Building No. 1. Because of the complexity and interconnected nature of the systems, Strand has tried to summarize the equipment in Table 2.12-2.

In general, the spaces within the building appear in good condition. The exhaust fans located on the mezzanine appear in good condition. The existing unit heaters within the UV space are showing signs of corrosion. Existing ductwork appears in good condition. It was also noted by staff that there are damper actuators within the UV room that are difficult to access.

B. Current Applicable Code and Standards

Table 2.12-1 provides a summary of the spaces and the applicable code and/or standard that govern the system design.

Space	Ventilation Requirements	Code/Standard Reference	Remarks
Effluent Pump Room	Not required	NFPA 820 5.2.2 Row 27	Ventilation driven by heat and humidity removal requirements.
UV Room	Not required	NFPA 820 5.2.2 Row 26	Ventilation driven by heat and humidity removal requirements.
Storage Room (Control Room) (Lamp Storage) (Storage)	Not required	None	
Sampler Room	Not required	None	
Electrical Room	Based on cooling requirements	None	

Table 2.12-1 Effluent Building Current Applicable Code Review

C. System Airflow Review

Table 2.12-2 shows discrepancies between the current applicable code and the current airflow and ventilation rates.

Table 2.12-2 Effluent Building System Airflow Review

Equipment	Spaces Served	Existing Ventilation Rate (cfm)	Ventilation Requirements (cfm)	Remarks
SF-7-1	Effluent Pump Room	14,600	--	SF-7-1 pulls a mix of fresh air from outside and return air from the effluent pump room. Return air is drawn through RF-7-1 and is either recycled or relieved out the roof. Heating for the effluent pump room is provided by hot water coil HC-7-3. The amount of ventilation should be based on pump motor and electrical heat removal. Further calculations would need to be performed to provide further guidance on ventilation requirements.
SF-7-2	UV Room	14,000	--	SF-7-2 pulls a mix for fresh air from outside and return air from the UV room. Return air is drawn through RF-7-2 and is either recycled or relieved out the roof. There is no heat provided for the UV room other than local unit heaters. The required ventilation will be based on humidity removal.
SF-7-3	Vestibule, Laboratory, Control Room, Lamp Storage	1,300 (Total)	--	SF-7-3 pulls a mix of fresh air from outside and return air from the effluent pump room (supplied by RF-7-1). The air is then heated with hot water booster coils located at each of the spaces. Air from the laboratory is exhausted out a fume hood. The other spaces are ultimately exhausted through RF-7-2. The required ventilation will depend on the use of the space. Some of these spaces appear to have changed use and may only require unit heaters in the future.
SF-7-4	Vestibule, Sampler Room, Electrical Room, Storage	2,110	--	SF-7-4 pulls a mix of fresh air from outside and return air from the UV room (supplied by RF-7-2). The air is then heated with hot water booster coils located at each of the spaces. Air from sample room is exhausted through EF-7-8. Air from the electrical room is returned through RF-7-2 The required ventilation will depend on the use of the space. Some of these spaces appear to have changed use and may only require unit heaters in the future.
EF-7-1and EF-7-2	Effluent Pump Room Mezzanine	--	--	Existing airflow data is not available. These exhaust fans are connected with louvers. These fans appear to be for heat removal from the mezzanine.
RSF-70-01 and RSF-70-02	UV Room	12,770 (each) 25,540 (total)	--	These roof supply fans supply air to the space. This air appears to relieve out a roof-mounted gravity relief (REF-70-01). The required ventilation will be based on humidity removal.
EF-7-6	Electrical Room	2000	Based on cooling requirements	This fan is dedicated to the electrical room and connected with an intake louver.

D. Proposed System Improvements

1. Separate the Ventilation Systems Serving the Main Room from the Ancillary Spaces.

SF-7-3 and SF-7-4 provide ventilation to a number of spaces, indicated above, that may not require ventilation. Based on the ductwork layout, the air supplied to these ancillary spaces may be returned or recycled from the UV room. This will likely result in the humidity from the UV room being spread through all areas of the building.

Strand recommends removing SF-7-3 and SF-7-4 and the interconnecting ductwork for these fans. This will simplify the remaining fans, equipment, and controls. The spaces that are currently served by these fans should be re-evaluated to understand if ventilation is required and if a separate dedicated system could be provided. As stated in other recommendations, Strand recommends any new equipment be remotely monitored.

The opinion of cost for this improvement is detailed in Table 2.12-3.

Equipment and Materials		
Hot Water Unit Heaters (Quantity–5)	$	7,500
Subtotal Equipment	$	7,500
Mechanical Installation	$	23,000
Demolition of Fans and Associated Ductwork	$	20,000
Interior Heating Hot Water Piping	$	31,000
Electrical	$	12,000
Miscellaneous (building modifications)	$	2,000
Subtotal Base Construction	**$**	**95,500**
Contractor General Conditions	$	15,000
Engineering	$	20,000
Contingencies (25%)	$	24,000
OPCC	**$**	**155,000**

Table 2.12-3 Effluent Building OPCC–Option 1

2. Separate the Electrical Room Ventilation and Cooling System

The electrical room is currently supplied with air from SF-7-4 and has a secondary exhaust fan (EF-7-6), which is connected to a louver.

Strand recommends removing the supply and return ductwork associated with SF-7-4. Strand recommends further evaluation be performed regarding the heat loss associated with the electrical equipment within the space to determine whether EF-7-6 is sufficient to remove heat from the space or if supplemental cooling is required.

The opinion of cost for this improvement is detailed in Table 2.12-4.

Equipment and Materials		
AHU (Quantity–1)	$	12,000
Ductwork, Dampers and Actuators	$	2,000
Subtotal Equipment	$	14,000
Mechanical Installation	$	42,000
Temperature Controls	$	10,000
Electrical	$	21,000
Miscellaneous (building modifications)	$	4,000
Subtotal Base Construction	**$**	**91,000**
Contractor General Conditions	$	14,000
Engineering	$	19,000
Contingencies (25%)	$	23,000
OPCC	**$**	**147,000**

Table 2.12-4 Effluent Building OPCC–Option 2

3. Negatively Pressurize the UV Room

Based on Strand's interpretation of the drawings, RSF-70-01 and RSF-70-02 supply air to the UV room. This positively pressurizes the UV room. Air is relieved out a roof-mounted gravity vent.

It would be preferable for the UV room be negatively pressurized to remove humidity from the space rather than allow it to exfiltrate to the adjoining spaces. RSF-70-01 and RSF-70-02 appear in good working condition, but when it is time for them to be replaced, Strand recommends replacing them with exhaust fans. Additionally, any associated damper actuators will be relocated to be accessible from the roof.

The opinion of cost for this improvement is detailed in Table 2.12-5.

Equipment and Materials		
Exhaust Fans (Quantity–2)	$	16,000
Damper and Actuator	$	2,000
Subtotal Equipment	$	18,000
Mechanical Installation	$	54,000
Demolition of Fans	$	20,000
Temperature Controls	$	3,000
Electrical	$	27,000
Miscellaneous (building modifications)	$	5,000
Subtotal Base Construction	**$**	**127,000**
Contractor General Conditions	$	20,000
Engineering	$	26,000
Contingencies (25%)	$	32,000
OPCC	**$**	**205,000**

Table 2.12-5 Effluent Building OPCC–Option 3

2.13 GAS CONTROL BUILDING

A. Existing Equipment and Observations

The building has at-grade and belowgrade levels. The levels are separated. The belowgrade level is directly connected to the East Primary Gallery. The at-grade level has a gas blending room and electrical room that are physically separated from each other. There is a stairwell between the at-grade and belowgrade level that is physically separated from the gas blending room. The stairwell has an exterior entrance and is separated from the scum ejector room by a door on the lower level.

The belowgrade level contains scum piping and pumping equipment, and is provided with a dedicated exhaust fan mounted on the roof. The fan is operational and in fair condition. The gas blending room is provided with a dedicated intake louver, exhaust fan, and hot water unit heater. The louver damper and some of the heating hot water piping within the space are showing minor signs of corrosion. The electrical room is served by a dedicated intake louver, exhaust fan, and EUH, which all appear in good condition. The stairwell is served by a cabinet unit heater, which is showing some signs of corrosion.

B. Current Applicable Code and Standards

Table 2.13-1 provides a summary of the spaces and the applicable code and/or standard that govern the system design.

Space	Ventilation Requirements	Code/Standard Reference	Remarks
Scum Ejector Room (Lower Level)	12 ACH continuous	NFPA 820 Table 6.2.2 Row 18c	Typically, a scum pumping area would be associated with Table 6.2.2 Row 6b, which calls for 6 ACH continuously. It appears the blended gas line to the Boiler Building it routed through this space and, therefore, is treated similar to the gas blending room.
Gas Blending Room	12 ACH continuous	NFPA 820 Table 6.2.2 Row 18c	Ventilation at this rate results in the space being Class I Division 2.
Electrical Room	Based on cooling requirements	N/A	
Stairwell	12 ACH continuous	NFPA 820 Table 6.2.2 Row 18c	The door is not considered a physical separation and, therefore, the stairwell should be ventilated similar to the scum ejector room.

Table 2.13-1 Gas Control Building Current Applicable Code Review

C. System Airflow Review

Table 2.13-2 shows discrepancies between the current applicable code and the current airflow and ventilation rates.

Space	Existing Ventilation Rate (cfm)	Ventilation Requirements (cfm)	Remarks
Scum Ejector Room (Lower Level)	1,200	1,680	Does not meet requirements. Ventilation at this rate results in the space being Class I Division 2.
Gas Blending Room	500	740	The existing ventilation rate is lower than 12 ACH, but the equipment in the space appears to be Class I Division 1 rated. Therefore, it may not be necessary to increase the ventilation rate of this space.
Electrical Room	400	--	Ventilation requirements will be based on heat removal. Further information would need to be reviewed to confirm the existing ventilation adequately cools the space.
Stairwell	0	900	Does not meet requirements.

Table 2.13-2 Gas Control Building System Airflow Review

D. Proposed System Improvements

The following proposed improvement is best implemented in conjunction with the proposed improvements for East Primary Gallery and Sludge Pumping Building Nos. 1 and 2. Refer to the applicable sections for details on the other proposed improvements.

1. Separation of the Lower Level from the East Primary Gallery

Based on Strand's interpretation of NFPA 820, because the scum ejector room (lower level) contains gas piping, there may be benefit to an airlock to separate this building from the gallery. Without an airlock or physical separation, the East Primary Gallery should be ventilated at a rate of 12 ACH continuously. In this instance, there is space available to install an airlock. NFPA 820 has language on how to properly design an airlock. Figure 2.13-1 explains the layout and intent of an airlock.

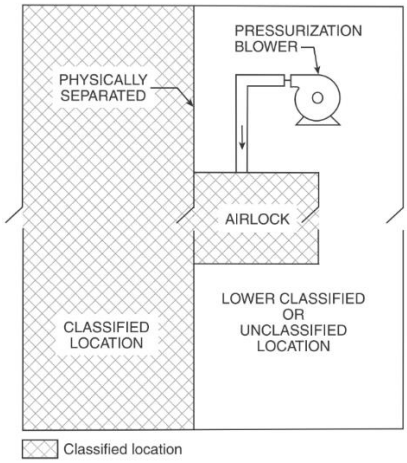

Figure 2.13-1 Example Airlock

In this instance the "lower classified" area would be the East Primary Tunnel and the "classified location" is the scum ejector room(lower level). Strand recommends installing an airlock and installing new fans in the areas where ventilation is deficient.

The opinion of cost for this improvement is detailed in Table 2.13-3.

Equipment and Materials		
Exhaust Fans (Quantity–3)	$	10,000
Damper and Actuator	$	2,000
Subtotal Equipment	$	12,000
Mechanical Installation	$	36,000
Temperature Controls	$	5,000
Electrical	$	23,000
Miscellaneous (airlock construction)	$	43,000
Subtotal Base Construction	**$**	**119,000**
Contractor General Conditions	$	18,000
Engineering	$	24,000
Contingencies (25%)	$	30,000
OPCC	**$**	**191,000**

Table 2.13-3 Gas Control Building OPCC

2.14 GRAVITY BELT THICKENER (GBT) BUILDING

A. Existing Equipment and Observations

The building has at-grade and belowgrade levels. The levels are connected by an open stairwell. The belowgrade level is connected to the Solids Gallery with a door. The at-grade level has a GBT room, control room, and polymer room that are separated from each other through door access.

The GBT room is served by AHU-1, located in the control room, which supplies ventilation and heating. Heating is provided by a hot water coil within AHU-1. The space is exhausted by EF-2. Supply and exhaust ductwork were replace or extended as part of a recent project and appear to be in good condition. AHU-1 is original to the building. The unit is functional, but past its typical service life. The hot water piping serving AHU-1 and associated valving show signs of corrosion. There are no auxiliary sources of heat in this space. The EF-2 appears to be in good operating condition. The GBT room is very odorous and humid.

AHU-2 provides heating and ventilation to the control room and lower level. Air is exhausted from the lower level by two exhaust fans, EF-4 and EF-5. AHU-2 is also original to the building. The unit and associated valving show signs of corrosion and the unit is past its typical service life. The actuator on the unit appeared to have been recently replaced. In conversations with MMSD, it was explained the existing face and bypass damper do not function. EF-4 and EF-5 are operational, but in poor condition and serving beyond their typical service life. The control room is currently positively pressurized relative to the GBT room and the polymer room, which appears to be keeping the space in fair condition with no major signs of corrosion. The lower level is in fair condition with some areas showing signs of corrosion and piping degradation. There are ferric chloride pumps located within the basement that contribute corrosion.

Exhaust fan EF-3 serves the polymer room, pulling air from near the floor. The roof-mounted fan is operational but is serving past its typical service life. No source of supply air was observed. Auxiliary heat is provided by a heating hot water unit heater (UH-1), as well as a small mobile unit heater near the water piping. Some of the equipment in the polymer room is showing signs of corrosion and deterioration.

B. Current Applicable Code and Standards

Table 2.14-1 provides a summary of the spaces and the current applicable code and/or standard.

Space	Ventilation Requirements	Code/Standard Reference	Remarks
Gravity Belt Thickener Room	6 ACH continuous	NFPA 820 6.2.2(a) Row 12a	Ventilating at this rate results in the space being unclassified (assumes NFPA guidelines are followed).
Control Room	6 ACH continuous	NFPA 820 6.2.2(a) Row 9b/ NR 110.14 (3)(c)(6)	Room connected to lower level with no physical separation.
Polymer Room	1 cfm/sf continuous	2015 IFC 5004.3.1	This ventilation rate is due to the presence of polymer chemical as viewed by the IFC.
Lower Level	6 ACH continuous	NFPA 820 6.2.2(a) Row 9b/ NR 110.14 (3)(c)(6)	Ventilating at this rate results in the space being unclassified (assumes NFPA guidelines are followed).

Notes:
cfm/sf=cubic feet per square foot
IFC=International Fire Code

Table 2.14-1 GBT Building Current Applicable Code Review

C. System Airflow Review

Table 2.14-2 shows discrepancies between the current applicable code and the current airflow and ventilation rates.

Space	Existing Ventilation Rate (cfm)	Ventilation Requirements (cfm)	Remarks
GBT Room	3,600	1,830	Meets requirements.
Control Room	500	600	Does not meet requirements.
Polymer Room	300	840	Does not meet requirements.
Lower Level	2,100	1,500	Meets requirements.

Table 2.14-2 GBT Building System Airflow Review

D. Proposed System Improvements

1. Replace Air Handling Supply Equipment and Increase Exhaust for GBT Room

Both the GBT room and the polymer room would benefit from increased ventilation. To accomplish this, Strand recommends replacing both AHU-1 and AHU-2 with units that supply increased airflow. The new AHUs could be installed in similar locations to the current units, but might be easier to access if located in the roof.

The polymer room would benefit from increased exhaust from an upsized exhaust fan. Additionally the space should receive some air supply from the new air handling equipment to aid in heating the space and providing better airflow distribution

The GBT room would benefit from increased exhaust airflow, additional exhaust ductwork, and increased exhaust velocities associated with the existing ductwork.

As stated in other recommendations, Strand recommends any new equipment be remotely monitored.

The opinion of cost for this improvement is detailed in Table 2.14-3.

Equipment and Materials		
MAUs (Quantity–2)	$	20,000
Exhaust Fans (Quantity–3)	$	11,500
Ductwork, Piping, and Accessories	$	28,000
Subtotal Equipment	$	60,000
Mechanical Installation	$	180,000
Demolition	$	15,000
Temperature Controls	$	10,000
Electrical	$	90,000
Miscellaneous (building modifications)	$	20,000
Subtotal Base Construction	**$**	**375,000**
Contractor General Conditions	$	57,000
Engineering	$	75,000
Contingencies (25%)	$	94,000
OPCC	**$**	**601,000**

Table 2.14-3 GBT Building OPCC

2.15 GBT POLYMER BUILDING

A. Existing Equipment and Observations

The building has abovegrade, at-grade, and belowgrade levels. The at-grade and belowgrade levels are separated from the upper level by doors. The structure has been repurposed from its original use.

The lower level consists of a single room, with sludge piping and a pump. Heat is provided to the space by a hot water baseboard heater (HWCH-E673). Air is drawn into the space through a transfer grille in the door and exhausted by an exhaust fan. The units, piping, and ductwork within the room are showing signs of corrosion.

The ground level consists of an electrical room and a polymer room, with no interconnection doors. The electrical room has an exterior entrance and is comprised of MCCs and electrical panels. An EUH provides heat to the space. There is no source of cooling or an exhaust fan for the electrical room. The polymer room consist of equipment skids, polymer holding tanks, and polymer piping. Heating is provided to the space by AHU-E651, located on the upper level. Air is exhausted from the space by an exhaust fan (EF-E652) located on the roof. Auxiliary heat is provided to the space by two hot water unit heaters (HUH-50-1 and HUH-50-2). The units and piping within the space appear in good condition. Insulation on the supply ductwork is peeling off and missing is some sections.

The upper level consists of a mechanical room and storage area, served by AHU-E651, located in the mechanical room. The unit is 100 percent outside air and has hot water heating. The unit appears in working condition but is near the end of its typical service life. There is also an exhaust fan in the mechanical room (EF-E653) that used to serve the polymer room, which is no longer operational. Two hot water unit heaters (HUH-50-3 and HUH-50-4) provide auxiliary heat to the upper level. The heaters appear in good working condition.

B. Current Applicable Code and Standards

Table 2.15-1 provides a summary of the spaces and the applicable code and/or standard that govern the system design.

Space	Ventilation Requirements	Code/Standard Reference	Remarks
Lower Level	6 ACH continuous	NFPA 820 6.2.2(a) Row 9b/ NR 110.14 (3)(c)(6)	It is Strand's understanding the pump in this space is a sludge pump. Ventilation at this rate results in the space being unclassified (assumes NFPA guidelines are followed).
Electrical Room (Ground Level)	Based on cooling requirements	None	
Polymer Room (Ground Level)	1 cfm/sf continuous	2015 IFC 5004.3.1	This ventilation rate is due to the presence of polymer chemical as viewed by the IFC.
Mechanical Room and Storage (Upper Level)	Not required	None	

Table 2.15-1 GBT Polymer Building Current Applicable Code Review

C. System Airflow Review

Table 2.15-2 shows discrepancies between the current applicable code and the current airflow and ventilation rates.

Space	Existing Ventilation Rate (cfm)	Ventilation Requirements (cfm)	Remarks
Lower Level	--	200	Existing ventilation data is not available.
Electrical Room (Ground Level)	0	Based on cooling requirements	
Polymer Room (Ground Level)	6,000	1,510	Meets requirements. Further consideration may be required to understand how or if the ventilation system should be designed to capture with dust from the dry polymer.
Mechanical Room and Storage (Upper Level)	400	None	

Table 2.15-2 GBT Polymer Building System Airflow Review

D. Proposed System Improvements

1. Replace AHU-E651 and Potential Dust Capture

The spaces served by AHU-E651 have changed from their original use. The existing unit is providing more ventilation than is required. Many of the remaining spaces served by AHU-E651 and EF-E652 require reduced or no ventilation and simple heating.

When AHU-E651 requires replacement, Strand recommends providing a unit dedicated to the polymer room and lower level. When EF-E652 requires replacement, Strand recommends providing a dedicated fan to serve the polymer room.

Additionally, if the accumulation of dust created by the opening and dumping of dry polymer bags causes dust to accumulate within the polymer room, Strand recommends providing a local point of use dust capture system.

The opinion of cost for this improvement is detailed in Table 2.15-3.

Equipment and Materials		
AHU (Quantity–1)	$	12,000
Exhaust Fans (Quantity–2)	$	5,500
Dust Collection System	$	2,500
Ductwork, Piping, and Accessories	$	3,500
Damper and Actuator	$	1,500
Subtotal Equipment	$	25,000
Mechanical Installation	$	75,000
Demolition	$	10,000
Temperature Controls	$	5,000
Electrical	$	38,000
Miscellaneous (building modifications)	$	7,000
Subtotal Base Construction	**$**	**160,000**
Contractor General Conditions	$	24,000
Engineering	$	32,000
Contingencies (25%)	$	40,000
OPCC	**$**	**256,000**

Table 2.15-3 GBT Polymer Building OPCC

2.16 HEADWORKS BUILDING

A. Existing Equipment and Observations

This building consists of abovegrade and belowgrade levels. The belowgrade areas are the meter room and the grit pump room. The remaining rooms are above grade.

The process areas are supplied with air from one large AHU (AHU-25-1). This AHU uses hot water for heating. None of the process spaces are cooled. There are multiple exhaust fans located throughout the structure that draw air out of the building. There is also an odor control exhaust fan (OCF-25-1) located on the roof that draws air from the channels. There are multiple hot water unit heaters located throughout the process spaces. The AHU, exhaust fans, unit heaters, and ductwork all appear in good condition. It was noted in conversations with maintenance staff the intake dampers on the AHU can get bound up, which results in tripping the gas sensors within the building. It was also noted the damper actuators for the roof-mounted exhaust fans are located at the underside of the roof deck and are difficult to access.

The stairwell areas are served by intake louvers and exhaust fans. All stairwell ventilation equipment appeared in good operating condition.

The control room is served by a packaged AHU (PAC-25-1). This is a cooling-only unit that uses direct expansion cooling. The space is heated by a hot water unit heater. The AHU is located at-grade and is showing signs of corrosion. Based on conversations with maintenance staff, this unit experiences multiple refrigerant leaks during the summer. This is likely because the AHU is exposed to high levels of hydrogen sulfide, which, over time, causes refrigerant leaks to form in the AHU because of the degradation of the copper solder joints.

There is a control panel with local HMI interface for control and monitoring of the AHU and exhaust fans. Unit heaters and the packaged AHU have local thermostats.

In general, the spaces and equipment are in good condition. Further remarks specific to the equipment can be found in Tables 2.16-1 and 2.16-2.

B. Current Applicable Code and Standards

Table 2.16-1 provides a summary of the spaces and the current applicable code and or standards.

Table 2.16-1 Headworks Building Current Applicable Codes and Standards

Space	Ventilation Requirements	Code/Standard Reference	Remarks
Screening Room	12 ACH continuous	NFPA 820 5.2.2 Row 2 b/ NR 110.16(1)(c)	NFPA permits this space to be de-rated to Class I Division 2 when ventilated at this rate However, NR 110 indicates electrical items within a screening room shall be rated for Class I Division 1 Group D. Therefore, it is not common that a screening room is electrically derated.
Chemical Storage	1 cfm/sf continuous	2015 IFC 5004.3.1	This assumes the quantity of chemicals stored within the space is in excess of the allowable storage limit.
Grit Pump Room	6 ACH continuous	NFPA 820 4.2.2 Row 15 a/ NR 110.14(3)(c)6	Ventilation at this rate results in the space being unclassified (assumes NFPA guidelines are followed).
Electrical/ Control Room	Based on cooling requirements	None	
Metering Room	6 ACH continuous	NFPA 820 4.2.2 Row 34 b	Ventilation at this rate results in the space being unclassified (assumes NFPA guidelines are followed)
Mechanical Room	Not required	N/A	
Stairwells	6 ACH continuous	NFPA 820 4.2.2 Row 15 a	Ventilation at this rate results in the space being unclassified (assumes NFPA guidelines are followed). The door separating these stairwells from the process spaces is not a physical separation; therefore, ventilation is appropriate.
Restroom Area	75 cfm per fixture	SPS 364 Table 0403	This space is separated from the process spaces and provided with a separate entrance and is, therefore, subject to the provisions of the Wisconsin Commercial Building Code.

C. System Airflow Review

Table 2.16-2 shows discrepancies between the current applicable code and the current airflow and ventilation rates.

Space	Existing Ventilation Rate (cfm)	Ventilation Requirements (cfm)	Remarks
Screening Room	30,600	29,100	Meets requirements.
Chemical Storage	1,300	500	Meets requirements.
Grit Pump Room	6,100	5,700	Meets requirements.
Electrical/ Control Room	**	Based on cooling requirements	**Data not available.
Metering Room	2,650	2,500	Meets requirements.
Mechanical Room	2,400	Not required	
Stairwells	700	300	Meets requirements.
Restroom Area	300	150	Meets requirements.

Table 2.16-2 Headworks Building System Airflow Review

D. Proposed System Improvements

Other than the following recommend improvements, Strand suggests all other equipment be replaced in kind once it requires excessive maintenance. Strand also recommends equipment status be remotely monitored to alert the plant to any potential concerns.

1. Replace the Electrical and Control Room Cooling Unit

As mentioned above, the unit that serves the electrical and control room requires frequent maintenance to address refrigerant leaks. The unit is located at grade near the influent channels. The location of the unit is likely exposing it to above normal levels of hydrogen sulfide, contributing to the frequent refrigerant leaks.

Strand recommends replacing this unit with a new unit. The new unit should be provided with appropriate coatings or constructed of alternative materials. It may also be beneficial to relocate the unit to be on the roof in an effort to increase the distance from the channels. The roof currently has a permanent access ladder allowing for easy access to the roof. Also, depending on the cooling demand, it may be advantageous to look at a split system that has an evaporator coil

located inside. This ability to install a split system depends on meeting code requirements related to economizing.

The opinion of cost for this improvement is detailed in Table 2.16-3.

Equipment and Materials		
Packaged Rooftop Unit (Quantity–1)	$	15,000
EUH (Quantity–1)	$	1,000
Ductwork and Accessories	$	4,200
Damper and Actuator	$	1,500
Subtotal Equipment	$	22,000
Mechanical Installation	$	66,000
Demolition	$	10,000
Electrical	$	33,000
Miscellaneous (building modifications)	$	6,000
Subtotal Base Construction	**$**	**137,000**
Contractor General Conditions	$	21,000
Engineering	$	28,000
Contingencies (25%)	$	35,000
OPCC	**$**	**221,000**

Table 2.16-3 Headworks Building OPCC–Option 1

2. Replace Intake Dampers on AHU and Actuators for Exhaust Fans

It was explained the main intake dampers on the AHU do not function well and can cause issues with airflow and gas detector alarms throughout the building. To address this issue, Strand recommends adding a control delay that does not permit the fan within the unit to start until the dampers are fully open. Strand also recommends the quantity of actuators be reviewed to determine if more and higher operating torque actuators are required for proper damper operation.

At the time of Strand's review, all fans were operating well and the ductwork and actuators associated with the fan also appeared in good condition. However, when the roof-mounted fans or actuators associated with them require replacement, Strand recommends the roof curb be adapted to allow the damper and actuator to be mounted so they are accessible from the roof.

The opinion of cost for this improvement is detailed in Table 2.16-4.

Equipment and Materials		
Dampers and Actuators	$	12,000
Subtotal Equipment	$	12,000
Mechanical Installation	$	15,000
Demolition	$	4,000
Electrical	$	5,000
Damper Frame Support	$	8,000
Subtotal Base Construction	**$**	**44,000**
Contractor General Conditions	$	7,000
Engineering	$	9,000
Contingencies (25%)	$	11,000
OPCC	**$**	**71,000**

Table 2.16-4 Headworks Building OPCC–Option 2

3. Decentralize Air Supply Equipment

Currently, the air supplied to the majority of the process spaces is supplied from one large AHU. The process spaces are served by multiple exhaust fans. As a result of the current setup, any issue with the main unit results in issues for multiple spaces. When the AHU reaches the end of its service life (which should not be for 10 or more years), Strand suggests performing a review to understand if it should be replaced with multiple units. One area it may be easy and beneficial to serve with a separate unit is the grit pump room. An MAU could be located on the roof and simply connected to the existing ductwork.

Strand would like to note the value of this improvement is highly dependent on how frequently the existing main unit requires maintenance. If the main unit performs well as time continues, then this suggested improvement is less beneficial.

The opinion of cost for this improvement is detailed in Table 2.16-5.

Equipment and Materials		
MAU (Quantity–1)	$	15,000
Ductwork and Accessories	$	9,000
Damper and Actuator	$	1,500
Subtotal Equipment	$	25,500
Mechanical Installation	$	77,000
Electrical	$	20,000
Miscellaneous (building modifications)	$	7,000
Subtotal Base Construction	**$**	**129,500**
Contractor General Conditions	$	20,000
Engineering	$	26,000
Contingencies (25%)	$	33,000
OPCC	**$**	**209,000**

Table 2.16-5 Headworks Building OPCC–Option 3

2.17 METROGRO PUMPING STATION

A. Existing Equipment and Observations

This building consists of an abovegrade and belowgrade level. The belowgrade level is open to the receiving room and mechanical corridor. The upper level consists of an electrical room, mechanical rooms, restroom, and a receiving room.

The lower level is one space with sludge pumps and associated sludge piping. AHU-A652 is located on the first floor and supplies this space. The AHU provides both outdoor air and recirculated air. The lower level appears in good condition with no noticeable signs of corrosion.

The electrical room is served by PACU-A651 located in the mechanical corridor. This unit is a packaged cooling unit with a heating hot water coil. The unit was not operational during the visit. The unit layout is uncommon, and the equipment appears set up poorly for optimal performance. Jacketing and insulation on the supply ductwork is beginning to peel off. Heat is provided to the mechanical corridor by two heating hot water units (HWUH-A655 and HWUH-A656). The electrical room and mechanical corridor spaces appear in good condition.

The mechanical room consists of AHU-A652, an air compressor, backflow preventer, and an inline circulation pumps (HWP-A657 and HWP-A658) for the heating hot water system. The receiving room and mechanical corridor are also served by AHU-A652. There is a hot water unit heater (HWUH-A654) that provides auxiliary heat to the receiving room as well. The AHU appeared functional at the time of review. The unit is in fair condition, but is past its typical service life. The inline circulation pumps had calcified deposit built up on the housings. The air compressors and heating hot water piping and valves appeared to be in good working condition.

There are roof-mounted gravity roof ventilators with dampers that serve the Electrical room, receiving room. The restroom is provided with a roof-mounted exhaust fan.

B. Current Applicable Code and Standards

Table 2.17-1 provides a summary of the spaces and the current applicable code and/or standards.

Space	Ventilation Requirements	Code/Standard Reference	Remarks
Pump Room (Lower Level)	6 ACH continuous	NFPA 820 6.2.2 Row 9b/ NR 110.14(3)(c)6	Ventilation at this rate results in the space being unclassified (assumes NFPA guidelines are followed). This space is considered a belowgrade dry well, which is what drives the ventilation requirement
Receiving Room/ Mechanical Corridor	6 ACH continuous	NFPA 820 6.2.2 Row 9b/ NR 110.14(3)(c)6	This space is an extension of the pump room and, therefore, ventilated at the same rate.
Mechanical Rooms	Not required	None	
Electrical Room	Based on cooling requirements	None	

Table 2.17-1 Metrogro Pumping Station Current Applicable Codes and Standards

C. System Airflow Review

Table 2.17-2 shows discrepancies between the current applicable code and the current airflow and ventilation rates.

Space	Existing Ventilation Rate (cfm)	Ventilation Requirements (cfm)	Remarks
Pump Room (Lower Level)	6,900	6,800	Meets requirements.
Receiving Room/ Mechanical Corridor	1,350	2,900	Does not meet requirements.
Mechanical Rooms	--	N/A	
Electrical Room	4,200	--	Ventilation requirements will be based on heat removal. Further information would need to be reviewed to confirm the existing ventilation adequately cools the space.

Table 2.17-2 Metrogro Pumping Station System Airflow Review

D. Proposed System Improvements

1. Replace AHUs

Both of the existing AHUs are serving beyond their typical service life and will soon require replacement.

Strand recommends the AHU-A652 be replaced with a similar style unit, but the recirculation ductwork be reviewed with compliance with the appropriate provisions of NR 110, which allows for 6 fresh ACH when occupied and 2 fresh ACH when unoccupied.

PACU-A651 is not a typical unit and is not achieving optimal cooling performance for the electrical room it serves. Strand recommends this unit be replaced with a split system type unit that includes an indoor fan coil unit with hot water heating and direct expansion cooling, and an exterior located condensing unit.

At the time of replacement, Strand would also recommend the heating hot water pumps be replaced based on their condition.

Strand recommends new controls be provided for the new air handling equipment and that all equipment be provided with the ability to be remotely monitored.

The opinion of cost for this improvement is detailed in Table 2.17-3.

Equipment and Materials		
AHUs (Quantity–2)	$	26,000
Ductwork, Piping, and Accessories	$	14,000
Subtotal Equipment	$	40,000
Mechanical Installation	$	120,000
Demolition	$	10,000
Temperature Controls (new panel with HMI)	$	15,000
Electrical	$	60,000
Miscellaneous (building modifications)	$	10,000
Subtotal Base Construction	**$**	**255,000**
Contractor General Conditions	$	39,000
Engineering	$	51,000
Contingencies (25%)	$	64,000
OPCC	**$**	**409,000**

Table 2.17-3 Metrogro Pumping Station OPCC

2.18 PRIMARY SLUDGE PUMPING BUILDING NO. 1

A. Existing Equipment and Observations

The building has an upper and lower level, which are open to one another. The upper level has electrical equipment. The lower level consists of sludge pumps and conveyance piping. The lower level is connected to the East Primary Gallery. There is no door or partition separating the lower level of the building from the gallery. The equipment and piping within the space appeared to be in fair condition with no major signs of corrosion or degradation.

On the upper level there is a small louver. The louver is directly ducted to an EUH. In the ductwork between the EUH and the louver there is a bypass damper in the bottom of the duct to recirculate air to the space. There is also a roof-mounted exhaust fan. The EUH is in good condition. The exhaust fan is operational, but in fair condition.

B. Current Applicable Code and Standards

Table 2.81-1 provides a summary of the spaces and the applicable code and/or standard that govern the system design.

Space	Ventilation Requirements	Code/Standard Reference	Remarks
Lower Level	6 ACH continuous	NFPA 820 Table 6.2.2 Row 9b/ NR 110.14(3)(c)6	Ventilation at this rate results in the space being unclassified (assumes NFPA guidelines are followed). This space is considered a belowgrade dry well, which is what drives the ventilation requirement.
Ground Level	6 ACH continuous	NFPA 820 Table 6.2.2 Row 9b/ NR 110.14(3)(c)6	Because the ground level is open to the lower level, these spaces are treated as having the same classification.

Table 2.18-1 Primary Sludge Pumping Building No. 1 Current Applicable Code Review

C. System Airflow Review

Table 2.18-2 shows discrepancies between the current applicable code and the current airflow and ventilation rates.

Space	Existing Ventilation Rate (cfm)	Ventilation Requirements (cfm)	Remarks
Lower Level	0	1,500	Does not meet requirements. Ventilation at this rate results in the space being unclassified (assumes NFPA guidelines are followed).
Ground Level	300	--	The ventilation requirement listed for the lower level includes the entire volume of the building.

Table 2.18-2 Primary Sludge Pumping Building No. 1 System Airflow Review

D. Proposed System Improvements

One item to acknowledge is the connection of this structure to the East Primary Gallery. Based on Strand's interpretation of NFPA 820, Strand does not think there is a benefit to provide doors to separate this building from the gallery. Therefore, this was not suggested as an improvement.

The following proposed improvement is best implemented in conjunction with the proposed improvements for East Primary Gallery, Sludge Pumping Building No. 2, and the Gas Control Building. Refer to the applicable sections for details on the other proposed improvements.

1. Provide Increased Ventilation

Strand recommends providing a new natural gas-fired or hot water MAU that supplies air to the upper level and a new exhaust fan that draws air from the upper and lower level. Alternatively, the exhaust for this structure could be transferred to the East Primary Gallery and exhausted though the gallery. Strand recommends all new equipment be provided with the ability to be remotely monitored.

The opinion of cost for this improvement is detailed in Table 2.18-3.

Equipment and Materials		
MAU (Quantity–1)	$	14,000
Exhaust Fan (Quantity–1)	$	2,500
Ductwork	$	7,500
Subtotal Equipment	$	24,000
Mechanical Installation	$	72,000
Belowgrade Natural Gas Piping	$	8,000
Temperature Controls	$	5,000
Electrical	$	36,000
Miscellaneous (building modifications)	$	6,000
Subtotal Base Construction	**$**	**151,000**
Contractor General Conditions	$	23,000
Engineering	$	31,000
Contingencies (25%)	$	38,000
OPCC	**$**	**243,000**

Table 2.18-3 Primary Sludge Pumping Building No. 1 OPCC

2.19 PRIMARY SLUDGE PUMPING BUILDING NO. 2

A. Existing Equipment and Observations

The building has an upper and lower level, which are open to one another. The upper level has electrical equipment and a separate room with a sink and counter area. The lower level consists of sludge pumps and conveyance piping. The lower level is connected to the East Primary Gallery and to the Solids Gallery. There is no door or partition separating the lower level of the building from these galleries. The equipment and piping within the space appeared to be in fair condition with no major signs of corrosion or degradation.

On the upper level there is a louver ducted to an electric furnace unit, which supplies air to the upper level. There is also a roof-mounted exhaust fan. The electric furnace unit appears relatively new. The roof-mounted exhaust fan is operational, but in fair condition and serving past its typical service life.

B. Current Applicable Code and Standards

Table 2.19-1 provides a summary of the spaces and the applicable code and/or standard that govern the system design.

Space	Ventilation Requirements	Code/Standard Reference	Remarks
Lower Level	6 ACH continuous	NFPA 820 Table 6.2.2 Row 9b/ NR 110.14(3)(c)6	Ventilation at this rate results in the space being unclassified (assumes NFPA guidelines are followed). This space is considered a belowgrade dry well, which is what drives the ventilation requirement.
Ground Level	6 ACH continuous	NFPA 820 Table 6.2.2 Row 9b/ NR 110.14(3)(c)6	Because the ground level is open to the lower level, these spaces are treated as having the same classification.

Table 2.19-1 Primary Sludge Pumping Building No. 2 Current Applicable Code Review

C. System Airflow Review

Table 2.19-2 shows discrepancies between the current applicable code and the current airflow and ventilation rates.

Space	Existing Ventilation Rate (cfm)	Ventilation Requirements (cfm)	Remarks
Lower Level	0	2,200	Does not meet requirements. Ventilation at this rate results in the space being unclassified (assumes NFPA guidelines are followed).
Ground Level	1,425	--	The ventilation requirement listed for the lower level includes the entire volume of the building.

Table 2.19-2 Primary Sludge Pumping Building No. 2 System Airflow Review

D. Proposed System Improvements

One item to acknowledge is the connection of this structure to the East Primary Gallery and Solids Gallery. Based on Strand's interpretation of NFPA 820, Strand does not think there is a benefit to provide doors to separate this building from these galleries. Therefore, this was not suggested as an improvement.

The following proposed improvement is best implemented in conjunction with the proposed improvements for East Primary Gallery, Sludge Pumping Building No. 1, and the Gas Control Building. Refer to the applicable sections for details on the other proposed improvements.

1. Provide Increased Ventilation

Strand recommends providing a new natural gas-fired or hot water MAU that supplies air to the upper level and a new exhaust fan that draws air from the upper and lower level. Alternatively, the exhaust for this structure could be transferred to the East Primary Gallery and exhausted though the gallery. Strand recommends all new equipment be provided with the ability to be remotely monitored.

The opinion of cost for this improvement is detailed in Table 2.19-3.

Equipment and Materials		
MAU (Quantity–1)	$	14,000
Exhaust Fan (Quantity–1)	$	2,500
Ductwork	$	7,500
Subtotal Equipment	$	24,000
Mechanical Installation	$	72,000
Heating Hot Water Piping	$	31,000
Temperature Controls	$	5,000
Electrical	$	36,000
Miscellaneous (building modifications)	$	6,000
Subtotal Base Construction	**$**	**174,000**
Contractor General Conditions	$	27,000
Engineering	$	35,000
Contingencies (25%)	$	44,000
OPCC	**$**	**280,000**

Table 2.19-3 Primary Sludge Pumping Building No. 2 OPCC

2.20 SERVICE BUILDING

A. Existing Equipment and Observations

This building includes several different spaces including service areas, maintenance shop areas, and storage areas. Heat is provided by the site heating hot water system. There is no mechanical cooling supplied to any of the areas of this building. The building has changed use from its original intent. Therefore, the existing equipment is not designed in line with the current space use.

The woodworking shop and material storage room are served by hot water unit heaters. The heaters appeared functional, but are nearing their typical service life.

The lower level vehicle storage garage was served by two roof-mounted air intakes and two sidewall exhaust fans. The fans have been removed. A hot water heater provides heat to the space. The ventilation equipment was designed for a chlorine storage room and is not designed for a vehicle storage garage. The equipment appeared to be in good condition.

Adjacent to the vehicle storage garage is the pump room/storage area. There are two roof-mounted air intakes, heating hot water coil, and two sidewall exhaust fans. The ventilation equipment was designed for a chlorine feed room and is not required for the current space use. Not all existing equipment within this space is functional.

Adjacent to the pump room/storage area are two additional storage rooms. These rooms contain some electrical equipment. There is a hot water unit heater for each space. There is no ventilation provided to the space. The unit heaters are showing signs of corrosion.

The lower floor storage space is served by an outside air louver ducted to a hot water unit heater to provide heat and ventilation to the space. There is also a hot water unit heater. The ventilation equipment was designed for a polymer room and is not required for the current space use. The equipment appeared to be in good condition.

B. Current Applicable Code and Standards

Table 2.20-1 provides a summary of the spaces and the applicable code and/or standard that govern the system design. Because this is not a process structure, the spaces in this building are subject to the applicable sections of the Wisconsin Commercial Building Code developed by Wisconsin Department of Safety and Professional Services (SPS).

Space Type	Ventilation Requirements	Code Reference	Remarks
Woodworking Shop (Upper Level)	Not required	N/A	Ventilation not required.
Material Storage (Upper Level)	Not required	N/A	Ventilation not required.
Vehicle Storage Garage (Lower Level)	0.75 cfm/sf intermittent 0.05 cfm/sf continuous	SPS 364.0404	Code also requires CO and NO_2 detection.
Pump Room (Lower Level)	Not required	N/A	Ventilation not required.
Storage Rooms (Lower Level)	Not required	N/A	Ventilation not required.
Southmost Storage Room (Lower Level)	Not required	N/A	Ventilation not required.

Notes:
CO = carbon dioxide
NO_2 = nitrogen dioxide

Table 2.20-1 Service Building Current Applicable Code Review

C. System Airflow Review

Table 2.20-2 shows the design airflow rates for equipment with available data.

Space Served	Ventilation Equipment	Airflow Rate (cfm)	Remarks
Woodworking Shop	--	N/A	
Material Storage	--	N/A	
Vehicle Storage Garage	EF-13-4 EF-13-5	N/A	Data not available.
Pump Room	EF-13-2 EF-13-3	600 4,500	
Storage Room	--	N/A	
Southmost Storage Room	MUH-13-1	870	

Table 2.20-2 Service Building System Airflow Review

D. Proposed System Improvements

It appears many of the current spaces in this structure have changed from their original use. For this reason, many of the spaces in this building require minimal or no ventilation and simple heating. When the existing equipment stops functioning or is unable to be repaired, in most instances, the existing equipment could be removed. The only space where ventilation improvements are recommended is noted in the following.

1. Improving Ventilation in Vehicle Storage Area

Strand recommends providing new exhaust fans to meet current code requirements. Strand recommends controls be upgraded to include CO and NO_2 detection. Strand recommends all equipment be remotely monitored.

2.21 SHOP BUILDING NO. 1

A. Existing Equipment and Observations

This building includes offices, shop areas, conference areas, and storage areas. Heat for the building is provided by a combination of heating hot water and natural gas. Heating hot water serving this building is supplied by hot water boilers located in the basement. Cooling is provided throughout a majority of the building. Cooling is provided by direct expansion coils in the rooftop AHUs. Many of the rooms in the building have been repurposed from their original use.

The multizone AHU (AHU-12-1) located in the basement room serves the basement, MCC room, and workshop. There is an inline booster fan (RF-12-1) within the return ductwork. Combustion air for the boilers is supplied by RF-12-1. There is a welding hood in the Workshop that appears to no longer be in use. The workshop is also provided with a hot water unit heater, and a roof-mounted power ventilator. The AHU is in poor condition and near the end of its useful service life.

The remaining areas of the first floor are heated and cooled by two roof-mounted AHUs. The northwestern most unit on the roof serves Office 109 (storage), the corridor and the restrooms. The newest unit, RTU-1, serves the exhibit room, display area, and kitchen area. An inline exhaust fan (IF-1) exhausts air from the restrooms. This equipment was recently installed and in good condition.

The second floor office areas are heated and cooled by two roof mounted AHUs. One unit serves the western one-half and the other the eastern one-half. The space was well conditioned at the time of time of the visit and equipment was in fair condition but nearing the end of its expected service life.

B. Current Applicable Code and Standards

Table 2.21-1 provides a summary of the spaces and the applicable code and/or standard that govern the system design. Because this is not a process structure, the spaces in this building are subject to the applicable sections of the SPS.

Space Type	Ventilation Requirements	Code Reference	Remarks
Office Gathering Area Training Room Break Room	7.5 cfm per person	SPS 364.0403(5)(a)	
Restrooms	75 cfm per fixture	SPS 364 Table 0403	
Kitchen	--	N/A	Kitchen ventilation is based on the kitchen use and presence of ventilation hoods. It does not appear this kitchen requires any special ventilation.
Workshop	Not required	N/A	Ventilation not required.
Storage	Not required	N/A	Ventilation not required.

Table 2.21-1 Shop Building No. 1 Current Applicable Code Review

C. System Airflow Review

Table 2.21-2 shows the design airflow rates for equipment with available data.

Equipment	Spaces Served	Existing Ventilation Rate (cfm)	Ventilation Requirements (cfm)	Remarks
AHU-12-1	Basement, Workshop, Storage/MCC	--	Varies	Ventilation is provided to these spaces for heating. Ventilation system has been altered enough that Strand is unable to tell the existing ventilation rate. The MCC room requires ventilation for cooling.
Existing RTU-A	First Floor Corridor, Office, Restrooms	1,920	Based on heating and cooling requirements	
Existing RTU-B	Second Floor Offices West Side	Data not available	Based on heating and cooling requirements	
Existing RTU-C	Second Floor Offices East Side	Data not available	Based on heating and cooling requirements	
RTU-1	Exhibit Room	2,650	Based on heating and cooling requirements	

Table 2.21-2 Shop Building No. 1 System Airflow Review

D. Proposed System Improvements

Other than the following recommend improvements, Strand suggests all other equipment be replaced in kind once it requires excessive maintenance.

1. Remove Boilers

The existing boilers appear in poor condition and will likely require maintenance or replacement in the near future. The boilers are installed in a tight space with limited access. It is Strand's understanding these boiler currently supply hot water to Shop Building No. 1, Shop Building No. 2, Storage Building No. 2, Service Building, and the Effluent Building.

It would be preferable to provide hot water from the plant main boiler house to serve this and the other structures listed above. This would involve routing new heating hot water piping through the site from the Blower Building No. 1 to the Service Building and then, using the existing underground piping, if it is determined to be in acceptable condition, to refeed Shop Building No. 1, Shop Building No. 2, Storage Building No. 2, and the Effluent Building.

Alternatively, if this improvement is cost-prohibitive, Strand recommends once the existing boilers are in need of replacement they be replaced with multiple condensing style boilers with sealed combustion. An alternative cost is provided for this option.

The opinions of cost for these improvements are detailed in Tables 2.21-3 and 2.21-4.

Equipment and Materials		
Rental Equipment	$	10,000
Subtotal Equipment	$	10,000
Interior Heating Hot Water Piping	$	38,000
Buried Heating Hot Water Piping (~400 feet)	$	243,000
Demolition of Existing Boilers	$	20,000
Miscellaneous (building modifications)	$	3,000
Subtotal Base Construction	**$**	**314,000**
Contractor General Conditions	$	48,000
Engineering	$	63,000
Contingencies (25%)	$	79,000
OPCC	**$**	**504,000**

Table 2.21-3 Shop Building No. 1 OPCC–Alternative 1

Equipment and Materials		
Hot Water Condensing Boilers (Quantity–4)	$	60,000
Heating Hot Water Pumps (Quantity–6)	$	32,000
Air Separators and Expansion Tanks	$	5,000
Subtotal Equipment	$	97,000
Demolition	$	20,000
Mechanical Installation	$	291,000
Temperature Controls (Boiler Master Panel)	$	30,000
Electrical	$	146,000
Miscellaneous (building modifications)	$	25,000
Subtotal Base Construction	**$**	**609,000**
Contractor General Conditions	$	92,000
Engineering	$	122,000
Contingencies (25%)	$	153,000
OPCC	**$**	**976,000**

Table 2.21-4 Shop Building No. 1 OPCC–Alternative 2

2. Remove AHU-12-1

It appears many of the spaces served by AHU-12-1 have changed from their original use. As noted in Table 2.21-2, many of the remaining spaces served by AHU-12-1 require minimal or no ventilation and simple heating.

When AHU-12-1 requires replacement, Strand recommends providing the basement, workshop, and storage areas with unit heaters and simple exhaust fans where required.

The opinion of cost for this improvement is detailed in Table 2.21-5.

Equipment and Materials		
Exhaust Fans (Quantity–1)	$	8,500
Hot water Unit Heaters (Quantity–6)	$	9,000
Damper and Actuator	$	1,000
Subtotal Equipment	$	18,500
Demolition of Existing AHU	$	15,000
Mechanical Installation	$	28,000
Interior Heating Hot Water Piping	$	15,000
Temperature Controls	$	2,000
Electrical	$	14,000
Miscellaneous (building modifications)	$	5,000
Subtotal Base Construction	**$**	**97,500**
Contractor General Conditions	$	15,000
Engineering	$	20,000
Contingencies (25%)	$	25,000
OPCC	**$**	**158,000**

Table 2.21-5 Shop Building No. 1 OPCC–Alternative 3

2.22 SHOP BUILDING NO. 2

A. Existing Equipment and Observations

This building has a welding room, machining room, finishing room, and storage areas. Heat is provided by heating hot water produced by the boilers in Shop Building No. 1. The building is not provided with any cooling. The building has one level with a storage/equipment mezzanine. There are multiple large bay garage doors that appear in good condition.

The building is supplied with ventilation from a main AHU (AHU-10-01) located on the mezzanine. The AHU has a main heating coil with a dedicated hot water circulator pump. There is a return fan separate from the AHU that returns a portion of the air from the building back to the AHU or relieves air to outside. There are three additional hot water reheat coils located within the supply ductwork from the AHU. The AHU, return fan, and reheat coils all appear in fair condition taking their age into consideration. However, most of this equipment is serving past its typical service life.

The remaining air is exhausted by five exhaust fans located throughout the building. There are also 11 hot water unit heaters located throughout the building to provide supplemental heating. The exhaust fans and hot water unit heaters also appear in fair condition, taking their age into consideration. However, most of this equipment is serving past its typical service life.

B. Current Applicable Code and Standards

Table 2.22-1 provides a summary of the spaces and the applicable code and/or standard that governs the system design. Because this is not a process structure, the spaces in this building are subject to the applicable sections of the Wisconsin Commercial Building Code.

Space Type	Ventilation Requirements	Code Reference	Remarks
Welding Rooms	Exhaust required (rate unspecified)	SPS 364.0501 (5)	Space is connected with vehicle storage garage. Local exhaust hood provided for intermittent use.
Machining Rooms	Not required	N/A	Space is connected with vehicle storage garage.
Finishing Room/Wash Bay	Exhaust required (rate unspecified)	SPS 364.0501 (5)	Hood above paint spray booths provided for intermittent use.
Vehicle Storage Garage	0.75 cfm/sf intermittent 0.05 cfm/sf continuous	SPS 364.0404	Requires CO and NO_2 detection. Local exhaust hood provided for intermittent use.

Table 2.22-1 Shop Building No. 2 Current Applicable Code Review

C. System Airflow Review

Table 2.22-2 shows the design airflow rates for equipment with available data.

Space	Existing Ventilation Rate (cfm)	Ventilation Requirements (cfm)	Remarks
Vehicle Storage Garage	3,360	230 (continuous) 3,390 (intermittent)	Does not meet requirements. Intermittent ventilation considers the welding room and machining room.

Table 2.22-2 Shop Building No. 2 System Airflow Review

D. Proposed System Improvements

Other than the following recommend improvement, Strand suggests all other equipment be replaced in kind once it requires excessive maintenance.

1. Increased Ventilation and Control Improvements

Strand recommends replacing the existing AHU with a new unit in a similar location and sizing that unit to provide the ventilation recommended in Table 2.22-2. The current unit has reheat coils, but when the new unit is installed, Strand recommends upsizing the main coil to eliminate the

need for reheat coils. The existing system also has a return fan separate from the AHU. Strand recommends the future unit have any return fan included as part of a new unit cabinet. This would help to simplify the system and controls. Strand recommends the installation of CO and NO_2 detectors that can activate the ventilation system as required in the applicable codes.

At the time of Strand's review, there was a fairly strong paint fume smell within the finishing room. Strand recommends providing a minimal amount of continuous ventilation, similar to the vehicle storage garage, to help turn over the air in this space and keep it negatively pressurized with respect to adjoining areas.

The opinion of cost for this improvement is detailed in Table 2.22-3.

Equipment and Materials		
AHU (Quantity–1)	$	12,000
Exhaust Fans (Quantity–2)	$	5,000
Hot Water Unit Heaters (Quantity–8)	$	12,000
Damper and Actuator	$	3,000
Subtotal Equipment	$	32,000
Demolition of Existing AHU	$	10,000
Mechanical Installation	$	48,000
Interior Heating Hot Water Piping	$	12,000
Temperature Controls (panel with HMI)	$	15,000
Electrical	$	24,000
Miscellaneous (building modifications)	$	8,000
Subtotal Base Construction	**$**	**149,000**
Contractor General Conditions	$	23,000
Engineering	$	30,000
Contingencies (25%)	$	38,000
OPCC	**$**	**240,000**

Table 2.22-3 Shop Building No. 2 OPCC

2.23 SLUDGE CONTROL BUILDING NO. 2

A. Existing Equipment and Observations

The building is built into a hillside and, therefore, has multiple at-grade and belowgrade levels and entrances. In general, there are doors separating different areas of the facility with multiple stairwells for access. The structure can generally be divided into two areas: the original construction and the expansion. There are two gas processing rooms, one in the original construction and one in the expansion. Both gas rooms are physically separated from the rest of the structure and provided with a separate entrance. This building is connected to the Solids Gallery and a newer gallery connection to Sludge Control Building No. 3. The gallery to Sludge Control Building No. 3 was not included as part of Strand's review

Because of the complexity of the layout of the structure, Strand has modified the airflow review table to provide additional detail on what equipment serves what areas, and include any noteworthy comments on equipment or space condition.

There are two temperature control panels located within the control rooms. The newer control panel has an HMI interface.

B. Current Applicable Code and Standards

Table 2.23-1 provides a summary of the spaces and the applicable code and/or standard that govern the system design. In all cases, the space rating listed in Table 2.23-1 assumes the NFPA guidelines (e.g., gas detection, ventilation monitoring system, and alarming,) are being followed.

C. System Airflow Review

Table 2.23-2 shows discrepancies between the current applicable code and the current airflow and ventilation rates.

Table 2.23-1 Sludge Control Building No. 2 Current Applicable Code Review

Space	Ventilation Requirements	Code/Standard Reference	Remarks
Control Room	12 ACH continuous Based on cooling requirements	NFPA 820 Table 6.2.2 Row 18c NR 110.26(3)(b)	Ventilation at this rate results in the space being Class 1 Division 2. This space is treated the same as the engine room because they are connected without physical separation. If cooling airflow requirements exceed 12 ACH, then this becomes the design condition.
Engine Room	12 ACH continuous	NFPA 820 Table 6.2.2 Row 18c NR 110.26(3)(b)	Ventilation at this rate results in the space being Class 1 Division 2.
Stairwell to Control Room	Not required	N/A	If the control room and engine room are ventilated at the prescribed rates, then there is no ventilation requirement for this space.
Lower Level Pump Room (Original Construction)	12 ACH continuous	NFPA 820 Table 6.2.2 Row 17c NR 110.26(3)(b)	Ventilation at this rate results in the space being Class 1 Division 2.
Stairwell/ Monorail Room	12 ACH continuous	NFPA 820 Table 6.2.2 Row 17c NR 110.26(3)(b)	Ventilation at this rate results in the space being Class 1 Division 2.
Gas Room	12 ACH continuous	NFPA 820 Table 6.2.2 Row 18c NR 110.26(3)(b)	Ventilation at this rate results in the space being Class 1 Division 2.
Stairwell to Gas Room	12 ACH continuous	NFPA 820 Table 6.2.2 Row 18c NR 110.26(3)(b)	Ventilation at this rate results in the space being Class 1 Division 2.
Lower Level Heat Exchanger Room (Expansion)	12 ACH continuous	NFPA 820 Table 6.2.2 Row 18c NR 110.26(3)(b)	Ventilation at this rate results in the space being Class 1 Division 2.
Boiler Room	12 ACH continuous	NFPA 820 Table 6.2.2 Row 18c NR 110.26(3)(b)	Ventilation at this rate results in the space being Class 1 Division 2.
Gas Conditioning Room (Expansion)	12 ACH continuous	NFPA 820 Table 6.2.2 Row 18c NR 110.26(3)(b)	Ventilation at this rate results in the space being Class 1 Division 2.
Stairwell SL05	12 ACH continuous	NFPA 820 Table 6.2.2 Row 17c NR 110.26(3)(b)	Ventilation at this rate results in the space being Class 1 Division 2.
Stairwell S100	12 ACH continuous	NFPA 820 Table 6.2.2 Row 17c NR 110.26(3)(b)	Ventilation at this rate results in the space being Class 1 Division 2.
Control Room (Expansion)	12 ACH continuous Based on cooling requirements	NFPA 820 Table 6.2.2 Row 18c NR 110.26(3)(b)	Ventilation at this rate results in the space being Class 1 Division 2. This space is treated the same as the boiler room because they are connected without physical separation. If cooling airflow requirements exceed 12 ACH, then this becomes the design condition.

Table 2.23-2 Sludge Control Building No. 2 Equipment Airflow Review

Equipment	Spaces Served	Existing Equipment Ventilation Rate (cfm)	Remarks
AHU-903	Control Room, Engine Room, Lower Level Pump Room (Original Construction), Stairwell/Monorail Room	18,000	This unit is located at grade. Equipment is in poor condition. Unit includes an evaporative cooling section, which appears in poor condition. The unit has hot water heating. Unit supplies fresh air and recirculated return air to a variety of spaces. Unit does not appear to have an exhaust or relief air section.
FCU-49-1	Control Room	1,000	This unit is hung from the ceiling in the engine room. This unit appears to be a 100 percent recirculation cooling-only unit serving the control room. The unit appeared functional and in fair condition. The unit is interconnected with a transfer fan, but the controls for how these pieces of equipment interact was not clear at the time of review. There is a condensing unit located at grade, which is connected to this fan coil unit.
AHU-902-1	Gas Room	3,090	This unit is located within the gas room. This unit appears in poor condition. The unit has hot water heating. The gas room was noxious at the time of review. The unit draws air in through a shaft connected to the stairwell. The space is pressurized, and air is relived out a separate stairwell shaft louver.
HVU-3	Engine Room	45,000	This unit is located at grade. The equipment is in fair condition but serving beyond its typical service life. The unit provides fresh and recirculated air to the engine room. The unit has hot water heating. This unit is associated with relief louvers located in the skylights above the engines.
EF-49	Stairwell/Monorail Room	--	Existing data is not available. This fan is located within the stairwell. The unit is functional and appear in fair condition. It is assumed this unit is associated with AHU-903 to exhaust air supplied to the lower level pump room (original construction).
AHU-35-1	Lower Level Heat Exchanger Room (Expansion), Boiler Room	13,300	This unit is located on the roof of the most recent Sludge Control Building Expansion. The unit has hot water heating. The was operating at the time of review. The interior of the unit is showing some signs of corrosion and overall the unit is in fair condition. The unit provides 100% make up air and does not recirculate air from the space.
SPF-35-01	Boiler Room	19,900	This supply fan is located on the roof of the most recent Sludge Control Building expansion. There was no visible access panel for this unit so Strand was unable to view the internals of the unit. The unit exterior appeared in good condition.
AHU-35-02	Gas Conditioning Room (Expansion)	3,100	This unit is located on the roof of the most recent Sludge Control Building expansion. The unit has hot water heating. The was operating at the time of review. The interior of the unit is showing some signs of corrosion and overall the unit is in fair condition. The unit provides 100 percent make-up air and does not recirculate air from the space.
PRV-35-1	Gas Conditioning Room (Expansion)	3,100	This exhaust fan is located on the roof of the most recent Sludge Control Building expansion. The was operating at the time of review and appeared in good condition.
PRV-35-2	Lower Level Heat Exchanger Room (Expansion)	6,500	This exhaust fan is located on the roof of the most recent Sludge Control Building expansion. The was operating at the time of review and appeared in good condition.
PRF-35-3	Stairwell SL05	--	This exhaust fan is located on the roof of the most recent Sludge Control Building Expansion. The was operating at the time of review and appeared in good condition.
PRF-35-1	Stairwell S100	--	This exhaust fan is located within the stairwell. This unit was operational and appears in good working condition.
CPU-35-1	Control Room (Expansion)	2,500	This cooling is located on the roof of the most recent Sludge Control Building expansion. The unit provides fresh air and recirculated air to the space. Plant staff indicated the refrigeration circuit within thin unit fails often and requires frequent repairs.

Space	Existing Space Ventilation Rate (cfm)	Space Ventilation Requirements (cfm)	Remarks
Control Room	2,200	700	Requirement listed to achieve 12 ACH.
Engine Room	47,000	4,800	Listed ventilation requirement does not include ventilation required for combustion air. Further review of the equipment information is required to understand combustion air requirements.
Stairwell to Control Room	0	0	
Lower Level Pump Room (Original Construction)	9,330	11,450	Listed requirement includes monorail room.
Stairwell/ Monorail Room	--		Considered part of lower level pump room.
Gas Room	3,090	2,100	
Stairwell to Gas Room	0	550	
Lower Level Heat Exchanger Room (Expansion)	6,500	7,200	
Boiler Room	26,900	4,500	Listed ventilation requirement does not include ventilation required for combustion air. Further review of the equipment information is required to understand combustion air requirements.
Gas Conditioning Room (Expansion)	3,100	2,000	
Stairwell SL05	400	200	
Stairwell S100	--	--	Data not available.
Control Room (Expansion)	2,500	1,300	

Table 2.23-3 Sludge Control Building No. 2 Space Airflow Review

D. Proposed System Improvements

In general, the following recommendations affect the original construction. The expansion area equipment is in better condition and installed in a manner in-line with code. Therefore, other than the recommend improvements below, Strand suggests all other equipment be replaced in-kind once it fails

or requires excessive maintenance. When the equipment serving the expansion area is replaced it would benefit from improved materials of construction (such as stainless steel internal liner panels or protective coatings on coils).

1. Remove AHU-903 and Replace with Multiple Units

AHU-903 serves multiple spaces throughout the building. The unit appears corroded and in need of replacement. Strand recommends the current unit be replaced with multiple smaller units. Strand recommends providing one MAU dedicated to serving the solids tunnel, one MAU dedicated to serving the lower level pump room, and one AHU dedicated to serving the control room. New ductwork would be required to connect these new units to the appropriate areas.

The new units serving the solids tunnel and lower level pump room can both be located at grade, provided with hot water heating, and be reconnected to existing ductwork. Existing FCU-49-01 and the associated ductwork and transfer fan would be removed. The new unit serving the control room can be located at grade, but special attention will need to be given to the location and materials of construction for the cooling system.

Existing EF-49 will be removed, resized, and reinstalled in a similar location. The transfer grill at the ceiling of the stairwell/monorail room can be removed.

Strand recommends all new equipment be provided with the ability to be remotely monitored.

The opinion of cost for this improvement is detailed in Table 2.23-4.

Equipment and Materials		
MAUs (Quantity–2)	$	35,000
Packaged Cooling Unit (Quantity–1)	$	14,000
Exhaust Fans (Quantity–1)	$	8,000
Ductwork and Accessories	$	16,000
Subtotal Equipment	$	73,000
Mechanical Installation	$	219,000
Demolition	$	20,000
Heating Hot Water Piping	$	20,000
Temperature Controls (new panel with HMI)	$	15,000
Electrical	$	110,000
Miscellaneous (building modifications)	$	19,000
Subtotal Base Construction	**$**	**476,000**
Contractor General Conditions	$	72,000
Engineering	$	96,000
Contingencies (25%)	$	119,000
OPCC	**$**	**763,000**

Table 2.23-4 Sludge Control Building No. 2 OPCC–Option 1

2. Remove AHU-902 and Relocate

Currently, AHU-902 is hung from the ceiling within the Gas Room. Strand recommends removing the unit from this space and locating a new MAU at grade. Currently, the gas room is positively pressurized. Strand recommends adding a new exhaust fan to draw air from the space and balance the space to be negatively pressurized. Strand also recommends providing ventilation for the stairwell to the Gas Room. The new MAU and exhaust fan can reuse existing building chases for ductwork routing. Strand recommends all new equipment be provided with the ability to be remotely monitored.

The opinion of cost for this improvement is detailed in Table 2.23-5.

Equipment / Materials		
MAUs (Quantity–1)	$	10,000
Exhaust Fans (Quantity–2)	$	7,000
Ductwork, Piping, and Accessories	$	14,000
Subtotal Equipment	$	31,000
Mechanical Installation	$	93,000
Demolition	$	20,000
Heating Hot Water Piping	$	16,000
Temperature Controls (new panel with HMI)	$	15,000
Electrical	$	47,000
Miscellaneous (building modifications)	$	8,000
Subtotal Base Construction	**$**	**230,000**
Contractor General Conditions	$	35,000
Engineering	$	46,000
Contingencies (25%)	$	58,000
OPCC	**$**	**369,000**

Table 2.23-5 Sludge Control Building No. 2 OPCC–Option 2

3. Improved Heat Removal for Engine Room

HVU-3 currently provides make-up air to the engine room. Air is currently either returned to the unit or relieved out the louvers surrounding the skylights. The applicable codes do not permit air for the engine room to be returned and recycled. Strand recommends resizing the existing unit and paring it with an exhaust system that both meets the code ventilation requirement and heat removal requirements. The exhaust fans could be located outside and potentially take up a portion of the existing skylights or be connected to the existing relief louvers with ductwork located outside. The challenge of this improvement would be to find a location for the exhaust fans and associated ductwork that would not interfere with access to the existing heat recovery system.

This would need to be reviewed in detailed design. Strand recommends all new equipment be provided with the ability to be remotely monitored.

The opinion of cost for this improvement is detailed in Table 2.23-6.

Equipment and Materials		
MAUs (Quantity–1)	$	35,000
Exhaust Fans (Quantity–2)	$	24,000
Ductwork and Accessories	$	5,000
Subtotal Equipment	$	64,000
Mechanical Installation	$	192,000
Demolition	$	20,000
Heating Hot Water Piping	$	12,000
Temperature Controls (new panel with HMI)	$	15,000
Electrical	$	96,000
Miscellaneous (building modifications)	$	16,000
Subtotal Base Construction	**$**	**415,000**
Contractor General Conditions	$	63,000
Engineering	$	83,000
Contingencies (25%)	$	104,000
OPCC	**$**	**665,000**

Table 2.23-6 Sludge Control Building No. 2 OPCC–Option 3

4. Improved Coil Coatings for CPU-35-01

It is Strand's understanding the CPU-35-01 commonly experiences refrigerant leaks. This unit is likely exposed to high levels of hydrogen sulfide, which, over time, causes refrigerant leaks to form in the unit because of the degradation of the copper solder joints. When the refrigerant system is no longer able to be repaired, Strand recommends replacing the existing unit with a similar style unit with proper coil coatings or potentially alternative cooling coil materials.

Additionally Strand recommends the space and unit be provided with the ability to be remotely monitored to determine if the unit has any issues that should be addressed.

The opinion of cost for this improvement is detailed in Table 2.23-7.

Equipment and Materials		
Packaged Cooling Unit (Quantity–1)	$	12,000
Subtotal Equipment	$	12,000
Mechanical Installation	$	18,000
Temperature Controls	$	10,000
Electrical	$	18,000
Miscellaneous (building modifications)	$	3,000
Subtotal Base Construction	**$**	**61,000**
Contractor General Conditions	$	10,000
Engineering	$	13,000
Contingencies (25%)	$	16,000
OPCC	**$**	**100,000**

Table 2.23-7 Sludge Control Building No. 2 OPCC–Option 4

2.24 SLUDGE DEWATERING

A. Existing Equipment and Observations

The building has an upper and lower level, which are open to one another. There is polymer piping, centrifuge equipment, polymer pumps, tanks, and associated piping routed throughout the space. This space is ventilated by AHU located in the lower level (AHU-55-1) mechanical room. This unit is MAU with no return air. Air is exhausted by a roof-mounted exhaust fan (PRV-55-1) that serves the lower and upper level. Auxiliary heat is provided by hot water unit heaters. The AHU, exhaust fan, and unit heaters appear in good working condition.

The upper level has a separate electrical room. This space is served by a packaged AHU (PAH-55-1) located in the lower level mechanical room. PAH-55-1 is an up-flow unit with direct expansion cooling and hot water heating. The associated condenser is located on a pad on the east side of the building. The packaged AHU appears to be in fair condition with some signs of corrosion on the interior. Based on feedback from the maintenance staff, the condensing unit has experienced refrigerant leaks.

Within the mechanical room there is also a temperature control panel with an HMI interface.

B. Current Applicable Code and Standards

Table 2.24-1 provides a summary of the spaces and the applicable code and/or standard that govern the system design.

Space	Ventilation Requirements	Code/Standard Reference	Remarks
Mezzanine (Upper Level) and Lower Level	6 ACH continuous	NFPA 820 Table 6.2.2 Row 12a	Ventilation at this rate results in the space being unclassified (assumes NFPA guidelines are followed).
Electrical Room (Upper Level)	Based on cooling requirements	N/A	
Mechanical Room (Lower Level)	Not required	N/A	

Table 2.24-1 Sludge Dewatering Building Current Applicable Code Review

C. System Airflow Review

Table 2.24-2 shows discrepancies between the current applicable code and the current airflow and ventilation rates.

Space	Existing Ventilation Rate (cfm)	Ventilation Requirements (cfm)	Remarks
Mezzanine (Upper Level) and Lower Level	13,800	3,700	Meets requirements.
Electrical Room (Upper Level)	2,500	--	Ventilation requirements will be based on heat removal.
Mechanical Room (Lower Level)	400	Not required	

Table 2.24-2 Sludge Dewatering Building System Airflow Review

D. Proposed System Improvements

The current equipment layout and equipment are appropriate for the space and in-line with current design standards. Beyond the following improvements, Strand recommends equipment be replaced in-kind as it fails or requires excessive maintenance.

1. Improved Coil Coatings for PAH-55-01

Based on Strand's review, PAH-55-01 is showing signs of corrosion and experiences refrigerant leaks. When this unit requires excessive maintenance, Strand recommends replacing the existing unit with a similar style unit with proper coil coatings or potentially alternative cooling coil materials.

Additionally, Strand recommends the space and unit be provided with the ability to be remotely monitored to determine if the unit has any issues that should be addressed.

The opinion of cost for this improvement is detailed in Table 2.24-3

Equipment and Materials		
AHU and Condensing Unit (Quantity–1)	$	14,000
Ductwork and Accessories	$	5,000
Subtotal Equipment	$	19,000
Mechanical Installation	$	29,000
Demolition	$	3,000
Temperature Controls	$	4,000
Electrical	$	18,000
Miscellaneous (building modifications)	$	5,000
Subtotal Base Construction	**$**	**78,000**
Contractor General Conditions	$	12,000
Engineering	$	16,000
Contingencies (25%)	$	20,000
OPCC	**$**	**126,000**

Table 2.24-3 Sludge Dewatering Building OPCC

2.25 SOLIDS GALLERY

A. Existing Equipment and Observations

The Solids Gallery is connected to a number of structures including Solids Control Building No. 1, Boiler Building, Primary Sludge Pumping Building No. 2, DAF Building, GBT Building, WAS Thickening Building, and Sludge Control Building No. 2. The connection to the Boiler Building is through a dedicated stairwell with its own exterior access door. There are doors within the gallery at the connections to the DAF Building, GBT Building, Sludge Control Building No. 2, and the interconnecting gallery to Sludge Pumping Building No. 2. The gallery is open to Sludge Control Building No. 1.

The gallery contains piping and pumps. There is digester gas piping present within the gallery. Overall, the equipment and piping within the gallery appears in fair condition. At the time of Strand's review, it was noted some pipes show signs of corrosion. There was standing water on the floor of the gallery. In some areas of the gallery strong odors were present.

Based on Strand's review, there are several different exhaust fans that serve the gallery. There is one exhaust fan located in the Boiler Building stairwell. This fan appears in good condition. There are two exhaust fans located at grade between Sludge Thickening Tank Nos. 1 and 2. These fans are operational but are in poor condition and serving beyond their typical service life. There is one exhaust fan located within the DAF Building enclosure, which was operational but is in poor condition. Air is supplied to the gallery from the AHU located at grade by Solids Control Building No. 2.

Solids Control Building No. 1 is not one of the structures included with this review. During the on-site investigation, the basement of Solids Control Building No. 1 was observed. Based on that limited observation, the basement appeared to have a dedicated air supply and exhaust. The airflow in Tables 2.25-1 and 2.25-2 does not include this equipment.

B. Current Applicable Code and Standards

Table 2.25-1 provides a summary of the spaces and the current applicable code and or standards.

Space	Ventilation Requirements	Code/Standard Reference	Remarks
Solids Gallery	6 ACH continuous	NFPA 820 6.2.2 Row 22d/ NR 110.26(3)(b)	Ventilation at this rate results in the space being unclassified (assumes NFPA guidelines are followed).

Table 2.25-1 Solids Gallery Current Applicable Code and Standards

C. System Airflow Review

Table 2.25-2 notes discrepancies between the current applicable code and the current airflow and ventilation rates.

Space	Existing Ventilation Rate (cfm)	Ventilation Requirements (cfm)	Remarks
Solids Gallery	9,304	6,000	Meets requirements. The noted ventilation requirement area includes the stairwell within the Boiler Building, but does not include the lower level of Solids Control Building No. 1.

Table 2.25-2 Solids Gallery Airflow Review

D. Proposed System Improvements

1. New Ventilation Equipment and Balancing and Gas Monitoring

The existing ventilation rate indicated in Table 2.25-2 is based on information obtained from record drawings. Based on the observed condition of the gallery, it would be beneficial to perform air balancing for the gallery and partner this with the replacement and/or relocation of the existing exhaust fans. The performance of the exhaust fan located within the DAF enclosure is likely diminished because it is not discharging to free air. This fan should be relocated to discharge to the exterior of the DAF enclosure. For the fans between Sludge Thickening Tank Nos. 1 and 2, one of the fans is located very close to grade and, during winter months, is likely obstructed by snow. This fan should be elevated on a curb. These fans have been in service for many years through multiple eras of construction, and may not be performing at the original design ventilation rate. Lastly, given the presence of digester gas piping, it would be beneficial to provide gas monitoring (if not already provided).

The opinion of cost for this improvement is detailed in Table 2.25-3

Equipment and Materials		
Exhaust Fans (Quantity–4)	$	12,000
Damper and Actuator	$	8,000
Subtotal Equipment	$	20,000
Mechanical Installation	$	30,000
Electrical	$	30,000
Miscellaneous (building modifications)	$	15,000
Subtotal Base Construction	**$**	**95,000**
Contractor General Conditions	$	15,000
Engineering	$	19,000
Contingencies (25%)	$	24,000
OPCC	**$**	**153,000**

Table 2.25-3 Solids Gallery OPCC

2.26 STORAGE BUILDING NO. 2

A. Existing Equipment and Observations

This building is comprised of vehicle maintenance stalls. Heating is provided to the building by a heating hot water system with two inline circulation pumps (HWP-78-1 and HWP-78-2). There are six hot water unit heaters (HWUH-78-1 through HWUH-78-6). The heating hot water piping is routed to Maintenance Shop No. 1, where the boilers reside. The unit heaters and overall space appear in good condition.

Sidewall exhaust fans (EF-78-1 and EF-78-2) located on the north and south ends of the building exhaust air from the space. No air intakes were observed. The exhaust fans appeared to be in good condition.

B. Current Applicable Code and Standards

Table 2.26-1 provides a summary of the spaces and the applicable code and/or standard that govern the system design. Because this is not a process structure, the spaces in this building are subject to the applicable sections of the Wisconsin Commercial Building Code.

Space Type	Ventilation Requirements	Code Reference	Remarks
Vehicle Storage	0.75 cfm/sf intermittent 0.05 cfm/sf continuous	SPS 364.0404	CO and NO_2 detection required.

Table 2.26-1 Storage Building No. 2 Current Applicable Code Review

C. System Airflow Review

Table 2.26-2 shows the design airflow rates for equipment with available data.

Space	Existing Ventilation Rate (cfm)	Ventilation Requirements (cfm)	Remarks
Storage Building No. 2	2,500	230 (continuous) 3,390 (intermittent)	Does not meet code requirements.

Table 2.26-2 Storage Building No. 2 System Airflow Review

D. Proposed System Improvements

Other than the following recommend improvement, Strand suggests all other equipment be replaced in kind once it requires excessive maintenance. For this type of space, Strand recommends a space temperature sensor be installed and remotely monitored to alert the plant to any potential freeze concerns.

1. Increased Ventilation and Control Improvements

Current codes view this type of building as an area where vehicles such as large trucks are stored. The ventilation system should be improved to provide the minimum ventilation recommended in Table 2.026-2 above. Presently there are no air intakes. Strand recommends adding a dedicated air intake. Strand also recommends the installation of CO and NO_2 detectors that can activate the ventilation system as is noted in the applicable codes.

The opinion of cost for this improvement is detailed in Table 2.26-3.

Equipment and Materials		
Louver (Quantity–1)	$	1,200
Hot Water Unit Heaters (Quantity–1)	$	1,000
Piping and Accessories	$	3,000
Damper and Actuator	$	2,000
Subtotal Equipment	$	8,000
Mechanical Installation	$	24,000
Temperature Controls	$	4,000
Electrical	$	12,000
Miscellaneous (building modifications)	$	10,000
Subtotal Base Construction	**$**	**58,000**
Contractor General Conditions	$	9,000
Engineering	$	12,000
Contingencies (25%)	$	15,000
OPCC	**$**	**94,000**

Table 2.26-3 Storage Building No. 2 OPCC

2.27 STORAGE BUILDING NO. 3

A. Existing Equipment and Observations

The building was previously a Grit Removal Building. The spaces have been repurposed to be two storage spaces, an electrical room, and shop area. The rooms are separated from one another by doors.

Each of the storage spaces are served by hot water unit heaters. The piping and heaters appears to be in good condition but are serving past their typical service life.

The electrical room is comprised of MCC equipment, panels, and a transformer. The space is served by a hot water unit heater. There is a roof-mounted exhaust fan for ventilation of the space. A large spiral duct is routed through the slab and up through the drop ceiling. A fan located above the ceiling draws air from the West Primary Gallery and discharges it to a wall louver. The unit heater and fans appears to be in good condition but are serving past their typical service life.

The shop area consists of oil containers, storage racking, and a desk. There is a hot water unit heater that provides heat to the room. No cooling equipment was noticed in the space. The unit heater appears to be in good condition but is serving past its typical service life.

B. Current Applicable Code and Standards

Table 2.27-1 provides a summary of the spaces and the applicable code and/or standard that govern the system design. Because this is not a process structure, the spaces in this building are subject to the applicable sections of the Wisconsin Commercial Building Code.

Space Type	Ventilation Requirements	Code Reference	Remarks
Storage Rooms	Not required	N/A	
Electrical Room	Not required	N/A	
Shop Area	--	--	The space may require ventilation based on the type and quantity of chemicals stored within the space.

Table 2.27-1 Storage Building No. 3 Current Applicable Code Review

C. System Airflow Review

Table 2.27-2 shows discrepancies between the current applicable code and the current airflow and ventilation rates.

Space	Existing Ventilation Rate (cfm)	Ventilation Requirements (cfm)	Remarks
Storage Rooms	None	N/A	
Electrical Room	None	N/A	Ventilation requirements will be based on heat removal.
Shop Area	None	--	Further investigation is required to understand these chemicals and their ventilation requirements.

Table 2.27-2 Storage Building No. 3 System Airflow Review

D. Proposed System Improvements

Other than the following recommend improvement, Strand suggests all other equipment be replaced in kind once it requires excessive maintenance.

1. Improved Ventilation for the Shop Area

The current shop area appears to contain oil and a desk area. Given the presence of oil storage, the shop area would benefit from ventilation regardless of the chemical quantities. Strand recommends adding an exhaust fan and intake louver that can operate based on a scheduled time to help intermittently purge air from the space.

The opinion of cost for this improvement is detailed in Table 2.27-3.

Equipment and Materials		
Louver (Quantity–1)	$	1,000
Hot Water Unit Heaters (Quantity–1)	$	1,000
Exhaust Fan (Quantity–1)	$	2,000
Piping and Accessories	$	2,000
Damper and Actuator	$	3,000
Subtotal Equipment	$	9,000
Mechanical Installation	$	14,000
Temperature Controls	$	2,000
Electrical	$	14,000
Miscellaneous (building modifications)	$	7,000
Subtotal Base Construction	**$**	**46,000**
Contractor General Conditions	$	7,000
Engineering	$	10,000
Contingencies (25%)	$	12,000
OPCC	**$**	**75,000**

Table 2.27-3 Storage Building No. 3 OPCC

2.28. SUBSTATION ELECTRICAL BUILDING U1

A. Existing Equipment and Observations

This building is served by a single rooftop unit (RTU-42-1). The unit provides mechanical cooling and also contains an electric heating coil. The unit and associated ductwork are in acceptable condition, but the unit is nearing its typical equipment service life. Plant staff have indicated the coils in the unit experience numerous refrigerant leaks every year and that the condenser coil is heavily corroded. The unit is controlled by a local thermostat.

B. Current Applicable Code and Standards

This building does not contain process equipment and is not normally occupied.

C. System Airflow Review

The airflow and mechanical cooling requirements are a function of the amount of equipment heat rejection within the space and the maximum temperature the equipment manufacturers deem acceptable (in many cases, this is 104°F). Table 2.28-1 provides the current ventilation rate but does not provide a required ventilation rate.

Space	Existing Ventilation Rate (cfm)	Ventilation Requirements (cfm)	Remarks
Electrical Building U1	6,600	--	Ventilation requirements will be based on heat removal. Further information would need to be reviewed to confirm the existing ventilation adequately cools the space

Table 2.28-1 Electrical Building U1 System Airflow Review

D. Proposed System Improvements

1. Provide New Rooftop Unit and Controls and Monitoring Improvements

Because the proximity of the rooftop unit to process structures, it is likely the unit is exposed to high levels of hydrogen sulfide, which, over time, causes refrigerant leaks to form in the unit because of the degradation of the copper solder joints. When this unit is no longer able to be repaired, Strand recommends replacing the unit with a similar style unit. The new unit would use alternative materials of construction for the evaporator coil (such as stainless steel) or would provide phenolic coating for all copper components.

Additionally, Strand recommends the space and unit be provided with the ability to be remotely monitored to determine if the unit has any issues that should be addressed.

The opinion of cost for this improvement is detailed in Table 2.28-2.

Equipment and Materials		
Packaged Rooftop Unit (Quantity–1)	$	18,000
EUH (Quantity–2)	$	1,500
Ductwork and Accessories	$	5,000
Subtotal Equipment	$	25,000
Mechanical Installation	$	38,000
Electrical	$	15,000
Miscellaneous (building modifications)	$	7,000
Subtotal Base Construction	**$**	**85,000**
Contractor General Conditions	$	13,000
Engineering	$	17,000
Contingencies (25%)	$	22,000
OPCC	**$**	**137,000**

Table 2.28-2 Electrical Building U1 OPCC

2.29 SUBSTATION ELECTRICAL BUILDING U15

A. Existing Equipment and Observations

This building is served by a single rooftop unit (RTU-40-1) The unit provides mechanical cooling and contains an electric heating coil. The unit and associated ductwork are in acceptable condition, but the unit is nearing the end of its typical equipment service live. Plant staff have indicated the coils in the unit experience numerous refrigerant leaks every year and that the condenser coil is heavily corroded. The unit is controlled by a local thermostat.

B. Current Applicable Code and Standards

This building does not contain process equipment and is not normally occupied.

C. System Airflow Review

The airflow and mechanical cooling requirements are a function of the amount of equipment heat rejection within the space and the maximum temperature the equipment manufacturers deem acceptable (in many cases, this is 104°F). Table 2.29-1 provides the current ventilation rate, but does not provide a required ventilation rate.

Space	Existing Ventilation Rate (cfm)	Ventilation Requirements (cfm)	Remarks
Electrical Building U15	6,600	--	Ventilation requirements will be based on heat removal. Further information would need to be reviewed to confirm the existing ventilation adequately cools the space.

Table 2.29-1 Electrical Building U15 System Airflow Review

D. Proposed System Improvements

1. Provide New Rooftop Unit and Controls and Monitoring Improvements

Similar to Electrical Building U1, because of the proximity of the roof-top unit to process structures, it is likely the unit is exposed to high levels of hydrogen sulfide, which, over time, causes refrigerant leaks to form in the unit because of the degradation of the copper solder joints. When this unit is no longer able to be repaired, Strand recommends replacing the unit with a similar style unit. The new unit would use alternative materials of construction for the evaporator coil (such as stainless steel) or would provide phenolic coating for all copper components.

Additionally, Strand recommends the space and unit be provided with the ability to be remotely monitored to determine if the unit has any issues that should be addressed.

The opinion of cost for this improvement is detailed in Table 2.29-2.

Equipment and Materials		
Packaged Rooftop Unit (Quantity–1)	$	18,000
EUH (Quantity–2)	$	1,500
Ductwork and Accessories	$	5,000
Subtotal Equipment	$	25,000
Mechanical Installation	$	38,000
Electrical	$	19,000
Miscellaneous (building modifications)	$	7,000
Subtotal Base Construction	**$**	**89,000**
Contractor General Conditions	$	14,000
Engineering	$	18,000
Contingencies (25%)	$	23,000
OPCC	**$**	**144,000**

Table 2.29-2 Electrical Building U15 OPCC

2.30 VEHICLE LOADING BUILDING

A. Existing Equipment and Observations

This building is a single-story structure with an office area, locker rooms, vehicle storage area, and a belowgrade sludge pump room.

The office area is separated from the vehicle storage area with doors. The office area is served by a rooftop unit that provides natural gas heating and direct expansion cooling to the office space. There is an exhaust fan on the roof that serves the locker rooms. The equipment is controlled by a local thermostat. The rooftop unit and exhaust fan appear in good condition.

The vehicle storage area is supplied with heat by gas-fired unit heaters. Each vehicle bay is provided with a dedicated exhaust fan. The east bay has a natural gas-fired MAU, an exhaust fan connected to a vehicle exhaust tunnel below the concrete floor, and a small oil storage room that is provided with a dedicated exhaust fan. The west bay has intake louvers, but does not have a MAU. The gas unit heaters are controlled by locale thermostats, but it was unclear how the other fans and MAU are controlled. The majority of the equipment serving this space is in fair or poor condition and serving beyond its typical service life.

The belowgrade sludge pump room has two dedicated exhaust fans and a fresh air intake. The fresh air introduced to the space is not tempered. Heat for this area is provided by an EUH. Based on conversations with MMSD, one of the exhaust fans is not functional and there are freeze concerns because the fresh air is not tempered.

B. Current Applicable Code and Standards

Table 2.30-1 provides a summary of the spaces and the applicable code and/or standard that govern the system design. Some of these spaces do not contain process equipment and are subject to the applicable sections of the Wisconsin Commercial Building Code.

Space Type	Ventilation Requirements	Code Reference	Remarks
Office Area	7.5 cfm/person	SPS 364.0403(5)(a)	
Locker Rooms/ Restrooms	0.5 cfm/sf 75 cfm/Fixture	SPS Table 364.0403	
Vehicle Storage	0.75 cfm/sf intermittent/ 0.05 cfm/sf continuous	SPS 364.0404	
Oil Storage	1 cfm/sf continuous	2015 IFC 5004.3.1	This ventilation rate is due to the presence of chemicals. For the purposes of this study, it was assumed the type and quantity of chemicals within this space exceed the maximum allowed per storage area.
Sludge Pump Room	6 ACH continuous	NFPA 820 Table 6.2.2 Row 9b/ NR 110.14 (3)(c)(6)	Ventilation at this rate results in the space being unclassified (assumes NFPA guidelines are followed). Because of the presence of sludge pumps this is considered a belowgrade dry well.

Table 2.30-1 Vehicle Storage Building Current Applicable Code Review

C. System Airflow Review

Table 2.30-2 shows the design airflow rates for equipment with available data.

Space	Existing Ventilation Rate (cfm)	Ventilation Requirements (cfm)	Remarks
Vehicle Storage	3,240	400 (continuous) 5,700 (intermittent)	Does not meet code requirements. The cfm indicated is the total required for both garage areas.
Oil Storage	300	250	Meets code requirements.
Sludge Pump Room	725	1,100	Does not meet requirements.

Table 2.30-2 Vehicle Storage Building System Airflow Review

D. Proposed System Improvements

1. Provide Ventilation and Controls Improvements for the Vehicle Storage Area

The current ventilation equipment serving the vehicle storage areas is in poor condition and does not meet current applicable code requirements. Strand recommends providing multiple new MAUs, one for each vehicle bay and new exhaust fans, one each for the intermittent ventilation and continuous ventilation. Strand also recommends providing updated controls to allow the system to be activated by CO and NO_2 detection.

The opinion of cost for this improvement is detailed in Table 2.30-3.

Equipment and Materials		
MAUs (Quantity–2)	$	20,000
Exhaust Fans (Quantity–4)	$	8,000
Damper and Actuator	$	4,000
Subtotal Equipment	$	32,000
Demolition	$	5,000
Mechanical Installation	$	96,000
Aboveground Natural Gas Piping	$	8,000
Temperature Controls (Panel with HMI)	$	15,000
Electrical	$	48,000
Miscellaneous (building modifications)	$	8,000
Subtotal Base Construction	**$**	**212,000**
Contractor General Conditions	$	32,000
Engineering	$	43,000
Contingencies (25%)	$	53,000
OPCC	**$**	**340,000**

Table 2.30-3 Vehicle Storage Building OPCC–Option 1

2. Provide Infrared Heaters and Increase Ventilation for Oil Storage Room

The existing gas-fired unit heaters are in fair condition, but for a vehicle storage space of this size, it would be preferable to have infrared heaters. Radiated heat is more efficient at keeping a space heated when a garage door is opened.

The oil storage room meets code requirements, but at the time of Strand's review, there was a heavy fume smell within the space. Strand recommends upsizing the fan to exceed the code requirements and more effectively remove fugitive emissions from this space.

The opinion of cost for this improvement is detailed in Table 2.30-4.

Equipment and Materials		
Infrared Heaters (Quantity–4)	$	12,000
Exhaust Fans (Quantity–1)	$	2,000
Damper and Actuator	$	500
Subtotal Equipment	$	14,500
Mechanical Installation	$	22,000
Aboveground Natural Gas Piping	$	8,000
Temperature Controls (panel with HMI)	$	15,000
Electrical	$	11,000
Miscellaneous (building modifications)	$	4,000
Subtotal Base Construction	**$**	**74,500**
Contractor General Conditions	$	12,000
Engineering	$	15,000
Contingencies (25%)	$	19,000
OPCC	**$**	**121,000**

Table 2.30-4 Vehicle Storage Building OPCC–Option 2

3. Provide Increased Ventilation for Sludge Pump Area

The exhaust fans serving this space are in poor condition and in need or replacement. Strand recommends the new fans are sized to provide the proper air changes. The increased airflow rate may also require additional unit heaters, which will be determined as a part of detailed design calculations.

The opinion of cost for this improvement is detailed in Table 2.30-5.

Equipment and Materials		
Exhaust Fans (Quantity–2)	$	3,000
Air Intake (Quantity–1)	$	1,500
EUHs (Quantity–2)	$	2,000
Damper and Actuator	$	1,000
Subtotal Equipment	$	7,500
Mechanical Installation	$	23,000
Temperature Controls	$	4,000
Electrical	$	12,000
Miscellaneous (building modifications)	$	2,000
Subtotal Base Construction	**$**	**48,500**
Contractor General Conditions	$	8,000
Engineering	$	10,000
Contingencies (25%)	$	13,000
OPCC	**$**	**80,000**

Table 2.30-5 Vehicle Storage Building OPCC–Option 3

2.31 WEST AERATION GALLERY

A. Existing Equipment and Observations

The West Aeration Gallery connects directly to Aeration Building No.4 and Blower Building No. 2. There is no door that physically separates Aeration Building No. 4 from the gallery. Blower Building No. 2 is separated from the gallery by a door.

There is scum and sludge piping within the West Aeration Gallery. The equipment and piping within the space appear to be in good condition with no major signs of corrosion or degradation.

There is an inline supply fan (SF-4-1) with a heating coil that supplies air to the West Aeration Gallery. The intake air for the SF-4-1 is drawn from the air shaft in Blower Building No. 2. SF-4-1 operates continuously and is interlocked with EF-4-2 and EF-4-4 which are both located at grade above the Aeration Gallery. SF-4-1 is also interlocked with EF-4-1, located on the roof of Aeration Control Building No. 4. The ventilation system treats the entire lower level area including the Aeration Gallery and the lower level of Aeration Control Building No. 4 as one space. There is concern the supply fan does not have sufficient static pressure to properly draw air from Blower Building No. 2 and supply it to the Aeration Gallery. Additionally, based on feedback from MMSD, the supply fan and associated hot water coil have experienced failures and leaks.

There are two additional exhaust fans located at grade above the Aeration Gallery (EF-4-3 and EF-4-5). These fans are interlocked with an intake air opening at grade above the Aeration Gallery. These fans are controlled based on temperature and will only operate when the space temperature rises above setpoint. This is also how EF-4-6 operates, which is located on the roof of Aeration Control Building No.4 and serves the lower level.

B. Current Applicable Code and Standards

Table 2.31-1 provides a summary of the spaces and the current applicable code and or standards.

Space	Ventilation Requirements	Code/Standard Reference	Remarks
West Aeration Gallery	6 ACH continuous	NFPA 820 Table 6.2.2 Row 9b/ NR 110.14 (3)(c)(6)	Ventilation at this rate results in the space being unclassified (assumes NFPA guidelines are followed). The gallery is connected to the basement of Aeration Control Building No. 4, which has sludge pumps and is considered a belowgrade dry well.

Table 2.31-1 West Aeration Gallery Current Applicable Code and Standards

C. System Airflow Review

Table 2.31-2 notes discrepancies between the current applicable code and the current airflow and ventilation rates.

Space	Existing Ventilation Rate (cfm)	Ventilation Requirements (cfm)	Remarks
West Aeration Gallery	7,000 (continuous) 9,400 (intermittent)	22,500	Does not meet code requirements.

Table 2.31-2 West Aeration Gallery Airflow Review

D. Proposed System Improvements

1. Increase Minimum Airflow and Switch Fans to be Continuous Ventilation

The existing ventilation rate is below the required ventilation based on the applicable code reference. Strand is not sure how frequently heat removal is required from the gallery. Therefore, Strand recommends removing the temperature control from EF-4-3, EF-4-5, and EF-4-6 and converting those fans to operate continuously. Strand recommends the existing supply fan be upsized to provide sufficient supply air. It will be necessary to also upsize the existing heating hot water coil associated with the supply fan. Strand also recommends the exhaust fans be reviewed to determine which of the fans should be upsized to achieve increased airflow based on whichever fan requires the most frequent maintenance. Lastly, Strand recommends providing the ability to remotely monitor the equipment and monitor space temperature to be alerted to any potential freezing concerns.

The opinion of cost for this improvement is detailed in Table 2.31-3.

Equipment and Materials		
Supply Fan (Quantity–1)	$	9,000
Hot Water Coil (Quantity–1)	$	10,000
Exhaust Fans (Quantity–2)	$	10,000
Dampers and Actuators	$	5,000
Subtotal Equipment	$	34,000
Mechanical Installation	$	102,000
Demolition	$	5,000
Temperature Controls (Panel with HMI)	$	15,000
Electrical	$	51,000
Miscellaneous (building modifications)	$	9,000
Subtotal Base Construction	**$**	**216,000**
Contractor General Conditions	$	33,000
Engineering	$	44,000
Contingencies (25%)	$	54,000
OPCC	**$**	**347,000**

Table 2.31-3 West Aeration Gallery OPCC

2.32 WEST PRIMARY GALLERY

A. Existing Equipment and Observations

The gallery is connected to the below grade level of Blower Building No. 2, without any doors physically separating the spaces. Supply air is drawn into the Primary Gallery from the lower level of the Blower Building and exhausted out on the southeast side of the gallery by an exhaust fan located in Storage Building No. 3.

There are primary sludge pumps and associated piping within the gallery. The equipment and piping within the space appears to be in fair condition with no major signs of corrosion or degradation.

B. Current Applicable Code and Standards

Table 2.32-1 provides a summary of the spaces and the current applicable code and or standards.

Space	Ventilation Requirements	Code/Standard Reference	Remarks
West Primary Gallery	6 ACH continuous	NFPA 820 6.2.2 Row 9b/ NR 110.14 (3)(c)(6)	Ventilation at this rate will result in the space being unclassified. (assumes NFPA guidelines are followed). The space is considered a belowgrade dry well.

Table 2.32-1 West Primary Gallery Current Applicable Code and Standards

C. System Airflow Review

Table 2.32-2 notes discrepancies between the current applicable code and the current airflow and ventilation rates.

Space	Existing Ventilation Rate (cfm)	Ventilation Requirements (cfm)	Remarks
West Primary Gallery	5,150	6,500	Does not meet requirements. Ventilation requirement includes both the gallery and basement of Blower Building No. 2.

Table 2.32-2 West Primary Gallery System Airflow Review

D. Proposed System Improvements

1. Increased Exhaust Airflow and Abandon Below Grade Duct

Currently exhaust from the West Primary Gallery is accomplished by a fan in Shop Building No. 3. Strand recommends removing the existing fan on the roof of Shop Building No. 3 and installing a new exhaust fan at grade. This will simplify the design and avoid the pressure drop associated with the long run of belowgrade ductwork.

The opinion of cost for this improvement is detailed in Table 2.32-3.

Equipment and Materials		
Exhaust Fans (Quantity–1)	$	8,000
Dampers and Actuators	$	2,000
Subtotal Equipment	$	10,000
Mechanical Installation	$	30,000
Demolition	$	10,000
Temperature Controls	$	2,000
Electrical	$	15,000
Miscellaneous (building modifications)	$	8,000
Subtotal Base Construction	**$**	**75,000**
Contractor General Conditions	$	12,000
Engineering	$	15,000
Contingencies (25%)	$	19,000
OPCC	**$**	**121,000**

Table 2.32-3 West Primary Gallery OPCC

2.33 IMPROVEMENTS AND OPCC SUMMARY TABLE

Table 2.33-1 is a summary of all proposed improvements for all buildings. For more detailed information, refer to the referenced table and page.

Table 2.33-1 Improvements and OPCC Summary Table

Structure	Description	Table	Page	OPCC
Aeration Control Building No. 1	Provide required ventilation, summer cooling, and winter heating.	Table 2.01-3	2-4	$ 224,000
Aeration Control Building No. 2	Provide required ventilation, summer cooling, and winter heating.	Table 2.02-3	2-7	$ 224,000
Aeration Control Building No. 3	Redistribute airflow and resize ventilation equipment.	Table 2.03-3	2-10	$ 270,000
Aeration Control Building No. 4	Improve cooling for control room.	Table 2.04-3	2-13	$ 139,000
Blower Building No. 1	Replace and improve unit ventilators and unit heaters.	Table 2.05-2	2-16	$ 383,000
Blower Building No. 1	Improve ventilation for lower level areas.	Table 2.05-3	2-17	$ 267,000
Blower Building No. 2	Reduce equipment and separate ventilation of basement and blower rooms.	Table 2.06-3	2-21	$ 262,000
Boiler Building	Improve boiler room heat removal.	Table 2.07-3	2-23	$ 118,000
DAF Building	Provide required ventilation.	Table 2.08-3	2-25	$ 224,000
DAF Thickener	Improve airflow.	Table 2.09-3	2-28	$ 196,000
East Aeration Gallery	Increase airflow.	Table 2.10-3	2-30	$ 152,000
East Primary Gallery	Improve ventilation equipment.	Table 2.11-3	2-32	$ 95,000
Effluent Building	Separate the ventilation systems serving the main room from the ancillary spaces.	Table 2.12-3	2-35	$ 155,000
Effluent Building	Separate the electrical room ventilation and cooling system.	Table 2.12-4	2-36	$ 147,000
Effluent Building	Negatively pressurize the UV room.	Table 2.12-5	2-37	$ 205,000
Gas Control Building	Separate the lower level from the East Primary Gallery.	Table 2.13-3	2-40	$ 191,000
GBT Building	Replace air handling supply equipment and increase exhaust for the GBT room.	Table 2.14-3	2-43	$ 601,000
GBT Polymer Building	Replace AHU-e651 and potential dust capture.	Table 2.15-3	2-46	$ 256,000
Headworks Building	Replace the electrical and control room cooling unit.	Table 2.16-3	2-50	$ 221,000
Headworks Building	Replace intake dampers on AHU and actuators for exhaust fans.	Table 2.16-4	2-51	$ 71,000
Headworks Building	Decentralize air supply equipment.	Table 2.16-5	2-52	$ 209,000
Metrogro Pumping Station	Replace AHUs.	Table 2.17-3	2-55	$ 409,000
Primary Sludge Pumping Building No. 1	Provide increased ventilation.	Table 2.18-3	2-58	$ 243,000
Primary Sludge Pumping Building No. 2	Provide increased ventilation.	Table 2.19-3	2-61	$ 280,000
Shop Building No. 1	Remove boilers (Alternative 1).	Table 2.21-3	2-68	$ 504,000
Shop Building No. 1	Remove boilers (Alternative 2).	Table 2.21-4	2-68	$ 976,000
Shop Building No. 1	Remove AHU-12-1.	Table 2.21-5	2-69	$ 158,000
Shop Building No. 2	Increase ventilation and control improvements.	Table 2.22-3	2-72	$ 240,000
Sludge Control Building No. 2	Remove AHU-903 and replace with multiple units.	Table 2.23-4	2-77	$ 763,000
Sludge Control Building No. 2	Remove AHU-902 and relocate.	Table 2.23-5	2-78	$ 369,000
Sludge Control Building No. 2	Improve heat removal in the engine room.	Table 2.23-6	2-79	$ 665,000
Sludge Control Building No. 2	Improve coil coatings for CPU-35-01.	Table 2.23-7	2-80	$ 100,000
Sludge Dewatering Building	Improve coil coatings for PAH-55-01.	Table 2.24-3	2-83	$ 126,000
Solids Gallery	Provide new ventilation equipment and balancing and gas monitoring.	Table 2.25-3	2-86	$ 153,000
Storage Building No. 2	Increase ventilation and control improvements.	Table 2.26-3	2-88	$ 94,000
Storage Building No. 3	Improve ventilation for the shop area	Table 2.27-3	2-90	$ 75,000
Substation Electrical Building U1	Provide a new rooftop unit and controls and monitoring improvements.	Table 2.28-2	2-92	$ 137,000
Substation Electrical Building U15	Provide a new rooftop unit and controls and monitoring improvements.	Table 2.29-2	2-94	$ 144,000
Vehicle Storage Building	Provide ventilation and controls improvements for the vehicle storage area.	Table 2.30-3	2-97	$ 340,000
Vehicle Storage Building	Provide infrared heaters and increase ventilation for the oil storage room.	Table 2.30-4	2-98	$ 121,000
Vehicle Storage Building	Provide increased ventilation for the sludge pump area.	Table 2.30-5	2-99	$ 80,000
West Aeration Gallery	Increase minimum airflow and switch fans to be continuous ventilation.	Table 2.31-3	2-102	$ 347,000
West Primary Gallery	Increase exhaust airflow and abandon the belowgrade duct.	Table 2.32-3	2-104	$ 121,000

2.34 IMPROVEMENTS AND OPCC PRIORITY TABLE

Table 2.34-1 arranges the proposed improvements in an order or priority. This priority was established based on field observations and conversations and feedback from MMSD.

Table 2.34-1 Improvements and OPCC Priority Table

Structure	Description	Table	Priority	OPCC
Priority I: In general, this designation is given to critical items that need to be addressed to satisfy code requirements, improve personnel safety, or creates conditions detrimental to existing equipment.				
GBT Building	Replace air handling supply equipment and increase exhaust for GBT room .	Table 2.14-3	I	$ 601,000
Sludge Control Building No. 2	Remove AHU-903 and replace with multiple units.	Table 2.23-3	I	$ 763,000
Sludge Control Building No. 2	Remove AHU-902 and relocate.	Table 2.23-4	I	$ 369,000
Sludge Control Building No. 2	Improve heat removal for engine room.	Table 2.23-5	I	$ 665,000
Sludge Control Building No. 2	Improve coil coatings for CPU-35-01.	Table 2.23-6	I	$ 100,000
Headworks Building	Replace the electrical and control room cooling unit.	Table 2.16-3	I	$ 221,000
Solids Gallery	New ventilation equipment and balancing and gas monitoring.	Table 2.25-3	I	$ 153,000
DAF Thickener	Improve airflow.	Table 2.09-3	I	$ 196,000
Metrogro Pumping Station	Replace AHUs.	Table 2.17-3	I	$ 409,000
Boiler Building	Improve boiler room heat removal.	Table 2.07-3	I	$ 118,000
Substation Electrical Building U1	Provide new rooftop unit, controls, and monitoring improvements.	Table 2.28-2	I	$ 137,000
Substation Electrical Building U15	Provide new rooftop unit, controls, and monitoring improvements.	Table 2.29-2	I	$ 144,000
			Total of Priority I Items:	**$ 3,876,000**
Priority II: In general, this designation is given to identified operational deficiencies. Priority II items represent an improvement that is recommended, but may not be required.				
Gas Control Building	Separate the lower level from the East Primary Gallery.	Table 2.13-3	II	$ 191,000
East Primary Gallery	Improve ventilation equipment.	Table 2.11-3	II	$ 95,000
Primary Sludge Pumping Building No. 1	Provide increased ventilation.	Table 2.18-3	II	$ 243,000
Primary Sludge Pumping Building No. 2	Provide increased ventilation.	Table 2.19-3	II	$ 280,000
East Aeration Gallery	Increase airflow.	Table 2.10-3	II	$ 152,000
Aeration Control Building No. 1	Provide required ventilation, summer cooling, and winter heating.	Table 2.01-3	II	$ 224,000
Aeration Control Building No. 2	Provide required ventilation, summer cooling, and winter heating.	Table 2.02-3	II	$ 224,000
Aeration Control Building No. 3	Redistribute airflow and resize ventilation equipment.	Table 2.03-3	II	$ 270,000
West Aeration Gallery	Increase minimum airflow and switch fans to be continuous ventilation.	Table 2.31-3	II	$ 347,000
GBT Polymer Building	Replace AHU-e651 and potential dust capture.	Table 2.15-3	II	$ 256,000
Blower Building No. 1	Replace and improve unit ventilators and unit heaters.	Table 2.05-2	II	$ 383,000
Blower Building No. 1	Improve ventilation for lower level areas.	Table 2.05-3	II	$ 267,000
DAF Building	Provide required ventilation.	Table 2.08-3	II	$ 224,000
Vehicle Storage Building	Provide ventilation and controls improvements for the vehicle storage area.	Table 2.30-3	II	$ 340,000
Vehicle Storage Building	Provide infrared heaters and increase ventilation for oil storage room.	Table 2.30-4	II	$ 121,000
Vehicle Storage Building	Provide increased ventilation for sludge pump area.	Table 2.30-5	II	$ 80,000
			Total of Priority II Items:	**$ 3,697,000**
Priority III: In general, this designation is given to non-critical systems. Priority III items represent an improvement that may be beneficial to MMSD, but is not required by a code.				
West Primary Gallery	Increase exhaust airflow and abandon belowgrade duct.	Table 2.32-3	III	$ 121,000
Blower Building No. 2	Reduce equipment and separate ventilation of basement and blower rooms.	Table 2.06-3	III	$ 262,000
Effluent Building	Separate the ventilation systems serving the main room from the ancillary spaces.	Table 2.12-3	III	$ 155,000
Effluent Building	Separate the electrical room ventilation and cooling system.	Table 2.12-4	III	$ 147,000
Effluent Building	Negatively pressurize the UV room.	Table 2.12-5	III	$ 205,000
Headworks Building	Replace intake dampers on AHU and actuators for exhaust fans.	Table 2.16-4	III	$ 71,000
Headworks Building	Decentralize air supply equipment.	Table 2.16-5	III	$ 209,000
Shop Building No. 1	Remove boilers (Alternative 1).	Table 2.21-3	III	$ 504,000
Shop Building No. 1	Remove boilers (Alternative 2).	Table 2.21-4	III	$ 976,000
Shop Building No. 1	Remove AHU-12-1.	Table 2.21-5	III	$ 158,000
Shop Building No. 2	Increase ventilation and control improvements.	Table 2.22-3	III	$ 240,000
Aeration Control Building No. 4	Improve cooling for control room.	Table 2.04-3	III	$ 139,000
Sludge Dewatering Building	Improve coil coatings for PAH-55-01.	Table 2.24-3	III	$ 126,000
Storage Building No. 2	Increase ventilation and control improvements.	Table 2.26-3	III	$ 94,000
Storage Building No. 3	Improve ventilation for the shop area.	Table 2.27-3	III	$ 75,000
			Total of Priority III Items:	**$ 3,482,000**

2.35 IMPROVEMENTS ENERGY REVIEW

Table 2.35-1 reviews the impact of the proposed improvements on the thermal energy use. The majority of the energy impact from the proposed improvements is a result of increased ventilation and the thermal energy needed to heat that ventilation air during the colder months of the year.

Table 2.35-1 Improvements Energy Consumption Review

Structure	Description	Current Total Ventilation Airflow (cfm)	Proposed Total Ventilation Airflow (cfm)	Current Estimated Annual Heating Energy Consumption (BTU/year)	Estimated Future Annual Heating Energy Consumption (BTU/year)	Annual Heating Energy Consumption Gain (Reduction) (BTU/year)	Annual Heating Energy Consumption Gain (Reduction) (percent)	Annual Energy Consumption Gain (Reduction) Applying NR 110 Energy Savings Measures (BTU/year)	Building Currently Served by Central Boiler Plant (Y/N)	Remarks
Priority I: In general, this designation is given to critical items that need to be addressed to satisfy code requirements, improve personnel safety, or creates conditions detrimental to existing equipment.										
GBT Building	Replace air handling supply equipment and increase exhaust for GBT room.	6,500	8,100	978,445,000	1,219,293,000	240,848,000	25%	NA	Y	Increasing the airflow of the GBT room beyond current airflow.
Sludge Control Building No. 2	Remove AHU-903 and Replace with multiple units.	9,330	12,150	1,404,444,900	1,828,939,500	424,494,600	30%	NA	Y	
Sludge Control Building No. 2	Remove AHU-902 and relocate.	3,090	2,650	465,137,700	398,904,500	(66,233,200)	-14%	NA	Y	
Sludge Control Building No. 2	Improved heat removal for engine room.	22,500	20,000	3,386,925,000	3,010,600,000	(376,325,000)	-11%	NA	Y	The 22,500 cfm is the minimum outside air noted on the drawings. Ventilation requirements are primarily driven by equipment cooling and combustion air requirements. The 20,000 cfm included is an estimate. Further calculations are required to understand the required airflow.
Sludge Control Building No. 2	Improved coil coatings for CPU-35-01.	-	-	-	-	-	-	NA		No net energy consumption change is expected
Headworks Building	Replace the electrical and control room cooling unit.	-	-	-	-	-	-	NA		No net energy consumption change is expected
Solids Gallery	New ventilation equipment and balancing and gas monitoring.	5,470	6,000	823,399,100	903,180,000	79,780,900	10%	NA	Y	It is assumed that further design would need to be done in order to determine the final design airflow rate for the Solids Gallery.
DAF Thickener	Airflow improvements.	-	-	-	-	-	-	NA		No net energy consumption change is expected.
Metrogro Pumping Station	Replace AHUs.	8,250	9,700	1,241,872,500	1,460,141,000	218,268,500	18%	(268,445,167)	Y	
Boiler Building	Boiler room heat removal improvements.	-	-	-	-	-	-	NA		No net energy consumption change is expected.
Substation Electrical Building U1	Provide new rooftop unit and controls and monitoring improvements.	-	-	-	-	-	-	NA		No net energy consumption change is expected.
Substation Electrical Building U15	Provide new rooftop unit and controls and monitoring improvements.	-	-	-	-	-	-	NA		No net energy consumption change is expected.
					Priority I Total	**520,833,800**	6%			

Structure	Description	Current Total Ventilation Airflow (cfm)	Proposed Total Ventilation Airflow (cfm)	Current Estimated Annual Heating Energy Consumption (BTU/year)	Estimated Future Annual Heating Energy Consumption (BTU/year)	Annual Heating Energy Consumption Gain (Reduction) (BTU/year)	Annual Heating Energy Consumption Gain (Reduction) (percent)	Annual Energy Consumption Gain (Reduction) Applying NR 110 Energy Savings Measures (BTU/year)	Building Currently Served by Central Boiler Plant (Y/N)	Remarks
Priority II: In general, this designation is given to identified operational deficiencies. Priority II items represent an improvement that is recommended, but may not be required.										
Gas Control Building	Separation of the Lower Level from the East Primary Gallery.	1,200	2,580	180,636,000	388,367,400	207,731,400	115%	NA	Y	
East Primary Gallery	Improved ventilation equipment.	0	3,000	0	451,590,000	451,590,000	--	301,060,000	N	No existing ventilation heating equipment is currently installed.
Primary Sludge Pumping Building No. 1	Provide increased ventilation.	300	1,500	45,159,000	225,795,000	180,636,000	400%	105,371,000	N	
Primary Sludge Pumping Building No. 2	Provide increased ventilation.	1,425	2,200	214,505,250	331,166,000	116,660,750	54%	6,272,083	N	
East Aeration Gallery	Increase airflow.	0	16,500	0	2,483,745,000	2,483,745,000	--	1,655,830,000	N	No existing ventilation heating equipment is currently installed.
Aeration Control Building No. 1	Providing required ventilation, summer cooling, and winter heating	0	1,830	0	275,469,900	275,469,900	--	183,646,600	N	No existing ventilation heating equipment is currently installed.
Aeration Control Building No. 2	Providing required ventilation, summer cooling, and winter heating	0	4,320	0	650,289,600	650,289,600	--	433,526,400	N	No existing ventilation heating equipment is currently installed.
Aeration Control Building No. 3	Redistribute airflow and resize ventilation equipment	1,275	2,900	191,925,750	436,537,000	244,611,250	127%	99,098,917	N	
West Aeration Gallery	Increase minimum airflow and switch fans to be continuous ventilation	7,000	22,500	1,053,710,000	3,386,925,000	2,333,215,000	221%	1,204,240,000	Y	
GBT Polymer Building	Replace AHU-E651 and potential dust capture	6,400	1,710	963,392,000	257,406,300	(705,985,700)	-73%	(791,787,800)	Y	
Blower Building No. 1	Replace and improve unit ventilators and unit heaters	-	-	-	-	-	-	NA		No net energy consumption change expected.
Blower Building No. 1	Improve ventilation for lower level areas	-	-	-	-	-	-	NA		No net energy consumption change expected.
DAF Building	Provide required ventilation	0	1,500	0	225,795,000	225,795,000	--	75,265,000	Y	No existing ventilation heating equipment currently installed.
Vehicle Storage Building	Provide ventilation and controls improvements for the vehicle storage area.	1,110	1,675	167,088,300	252,137,750	85,049,450	51%	NA	N	The cfm values are different than within the report to account for intermittent ventilation runtimes.
Vehicle Storage Building	Provide infrared heaters and increase ventilation for oil storage room.	-	-	-	-	-	-	NA		No net energy consumption change is expected.
Vehicle Storage Building	Provide increased ventilation for sludge pump area.	725	1,100	109,134,250	165,583,000	56,448,750	52%	NA	N	
					Priority II Total	**6,605,256,400**	226%			

Structure	Description	Current Total Ventilation Airflow (cfm)	Proposed Total Ventilation Airflow (cfm)	Current Estimated Annual Heating Energy Consumption (BTU/year)	Estimated Future Annual Heating Energy Consumption (BTU/year)	Annual Heating Energy Consumption Gain (Reduction) (BTU/year)	Annual Heating Energy Consumption Gain (Reduction) (percent)	Annual Energy Consumption Gain (Reduction) Applying NR 110 Energy Savings Measures (BTU/year)	Building Currently Served by Central Boiler Plant (Y/N)	Remarks
Priority III: In general, this designation is given to non-critical systems. Priority III items represent an improvement that may be beneficial to MMSD, but is not required by a code.										
West Primary Gallery	Increased exhaust airflow and abandon belowgrade duct.	-	-	-	-	-	-	NA		The existing space does not have ventilation heating. It was assumed that no additional ventilation heating would be required as a part of future projects.
Blower Building No. 2	Reduce equipment and separate ventilation of basement and blower rooms.	-	-	-	-	-	-	NA		The existing space does not have ventilation heating. It was assumed that no additional ventilation heating would be required as a part of future projects.
Effluent Building	Separate the ventilation systems serving the main room from the ancillary spaces.	-	-	-	-	-	-	NA		No net energy consumption change is expected.
Effluent Building	Separate the electrical room ventilation and cooling system.	-	-	-	-	-	-	NA		No net energy consumption change is expected.
Effluent Building	Negatively pressurize the UV room.	-	-	-	-	-	-	NA		No net energy consumption change is expected.
Headworks Building	Replace intake dampers on AHU and actuators for exhaust fans.	-	-	-	-	-	-	NA		No net energy consumption change is expected.
Headworks Building	Decentralize air supply equipment.	-	-	-	-	-	-	NA		No net energy consumption change is expected.
Shop Building No. 1	Remove boilers (Alternative No. 1).	-	-	-	-	-	-	NA		No net energy consumption change is expected.
Shop Building No. 1	Remove boilers (Alternative No. 2).	-	-	2,900,000	2,465,000	(435,000)	-15%	NA	N	Energy reduction is a result of increased efficiency of new boilers.
Shop Building No. 1	Remove AHU-12-1.	-	-	-	-	-	-	NA		
Shop Building No. 2	Increased ventilation and control improvements.	840	848	126,445,200	127,574,175	1,128,975	1%	NA	N	The cfm values are different than within the report to account for intermittent ventilation runtimes.
Aeration Control Building No. 4	Improve cooling for control room.	-	-	-	-	-	-	NA		No net energy consumption change is expected.
Sludge Dewatering Building	Improved coil coatings for PAH-55-01.	-	-	-	-	-	-	NA		This space is well maintained and for any future projects Strand would not recommend reducing the airflow. No net energy consumption change is expected.
Storage Building No. 2	Increased ventilation and control improvements.	625	848	94,081,250	127,574,175	33,492,925	36%	NA	N	The cfm values are different than within the report to account for intermittent ventilation runtimes.
Storage Building No. 3	Improved ventilation for the shop area.	0	250	0	37,632,500	37,632,500	--	NA	N	
					Priority III Total	**71,819,400**	32%			
					Overall Total from Improvements Above (BTU)	**7,197,909,600**				

Table 2.35-2 provides additional energy summary information.

Item	Value	Remarks
Total estimated building annual heating energy for the Nine Springs Treatment Plant	34,961,110,037 BTU	This information was taken from the Energy Management Master Plan developed by Carollo Engineers, Inc.
Estimated percent change in annual heating energy consumption from proposed improvements for the Nine Springs Plant	21%	This percentage is a total and assumes all improvements are implemented. This is without consideration of energy saving measures available in NR 110.
Estimated heating energy of improvements in buildings not currently served by the Central Boiler Treatment Plant	4,616,320,100 BTU	This is a total of the improvements notes in Table 2.35-1 that indicate “N” for the column titled “Building Currently Served by Central Boiler Treatment Plan.t”
Total estimated energy saved applying NR110 energy savings measures	3,470,218,267 BTU	Total of the column titled “Annual Energy Consumption Gain (Reduction) Applying NR 110 Energy Savings Measures (BTU/year)” subtracted from the total of the column titled “Annual Heating Energy Consumption Gain (Reduction) (BTU/year).” There are only certain improvements that meet the criteria for applying the energy saving measures outlined within NR 110.

Table 2.35-2 Energy Review Summary

APPENDIX 5F

NSWTP CAPITAL PROJECT INFRASTRUCTURE PLACEMENT PLAN

Madison Metropolitan Sewerage District

Nine Springs Wastewater Treatment Plant

Capital Project Infrastructure Placement Plan

July 2023

Madison Metropolitan Sewerage District

Nine Springs Wastewater Treatment Plant

Capital Project Infrastructure Placement Plan

MMSD Project No.2205638 (CIPD04)

Table of Contents

Executive Summary . . . . . **II**

Chapter One: Overview **2**
- Introduction 3
- Planning Process 6
- Project Goals 7

Chapter Two: Plant Context **8**
- Location 9
- Plant Development History 10
- Community Character 11

Chapter Three: Operations & Staffing **14**
- MMSD Organization Chart 15
- Plant Staff 16
- Plant Operating Hours 16
- Metrogro Operations 16
- Septage Hauler Operations 16

Chapter Four: Site Analysis. **18**
- Current Land Use 19

Chapter Five: Building Functionality Assessment **32**
- Operations Building 34
- Maintenance Facility Building 38
- Vehicle Loading Building 41
- Maintenance Shop No. 1 — Shop One 42
- Headworks (District Building ID No. 2) 44
- General Plant Storage 45
- Chemical Storage 45

Chapter Six: Program and Placement Considerations **46**
- CPIPP 1.0 Electrical Service Upgrade and Backup Generators 48
- CPIPP 2.0 Biosolids Improvements 50
- 2.1 Metrogro Load-out Improvements 50
- 2.2 Metrogro Storage and Maintenance Facility 52
- CPIPP 3.0 Septage Receiving Improvements 55
- CPIPP 4.0 Heat and Power Improvements 57
- CPIPP 5.0 Liquid Processing Phase 2 58
- CPIPP 6.0 Campus Security/Safety Improvements 59
- CPIPP 7.0 General Workplace Improvements 62
- CPIPP 7.1 Operations Building 62
- CPIPP 8.0 Plant Expansion and Tertiary Treatment 64
- CPIPP 9.0 Regional Stormwater System 66
- CPIPP 10.0 Solids Digestion Expansion 68

Tables & Figures

Table 3.0 Full Time Employment & Projected Increase by Department 16

Table 4.0 Updated from August 2018 Fleet Management Plan. 28
Table 4.1 Metrogro Fleet 29

Table 5.0. Operations Building Staff 34
Table 5.1 Maintenance Facility Building Staff 38
Table 5.2 Vehicle Loading Building Staff 41

Figure 1.0 Project Area. 4

Figure 2.0 Location Map 9
Figure 2.1 Plant Development. 10
Figure 2.2 Rimrock-Moorland Neighborhood Land Use 11
Figure 2.3 Lewis Nine Springs E-Way 12

Figure 3.0 Organization Chart 15

Figure 4.0 Site Land Use. 19
Figure 4.1 Ecological Systems. 20
Figure 4.2 Ecoregions of Wisconsin 21
Figure 4.3 Soil Suitability for Building 22
Figure 4.4 Gate 1. 23
Figure 4.5 Gate 2 23
Figure 4.6 Gate 3 24
Figure 4.7 Gate 4. 24
Figure 4.8 Residential Gate. 24
Figure 4.9 Existing Circulation 25
Figure 4.10 Parking and Fleet Storage 27
Figure 4.11 Utility Conflicts 30

Figure 5.0 Existing Conditions - Plant Map 33
Figure 5.1 Operations Building First Floor. 35
Figure 5.2 Operations Building Second Floor 36
Figure 5.3 Operations Lower Level 37
Figure 5.4 Maintenance Facility Building First Floor. 39
Figure 5.5 Maintenance Facility Building Mezzanine. 40
Figure 5.6 Vehicle Loading Building 41
Figure 5.7 Shop One First Floor 42
Figure 5.8 Shop One Second Floor. 43
Figure 5.9 Chemical Storage Locations 45

Figure 6.0. Electrical Service Upgrade Location 49
Figure 6.1. Biosolids Vehicle Load Out 51
Figure 6.2. Biosolids Metrogro 52
Figure 6.3. Biosolids Metrogro 53
Figure 6.4. Biosolids Expansion 54
Figure 6.5. Septage Receiving A 55
Figure 6.6. Septage Receiving B 56
Figure 6.7 Heat and Power Improvements. 57
Figure 6.8. Liquid Processing 58
Figure 6.9. Campus Security & Admin 59
Figure 6.10. Site Circulation. 61
Figure 6.11. Maintenance Storage. 63
Figure 6.12. Plant Expansion 65
Figure 6.13. Stormwater 67
Figure 6.14 Solids Digestion Expansion 69
Figure 6.15 Proposed Land Use 70
Figure 6.16 Full CPIPP Build Out. 71

Appendices

A CPIPP Estimated Costs

B Technical Memorandum Stormwater Report

C Technical Memorandum Roundabout Feasibility

D Meeting Presentations and Minutes

- Workshop 01
- Workshop 02
- Plan Presentation
- Metrogro Meeting
- Septage Hauler Meeting

Executive Summary

CPIPP TITLE		DESCRIPTION	PLACEMENT CONSIDERATIONS	COST
1.0	**ELECTRICAL SERVICE UPGRADE AND BACKUP GENERATORS**	Replaces the outdoor service switchgear, transformers, busway system and indoor distribution switchgear for the incoming electrical service to the treatment plant and adds backup generators.	• Located between the Effluent Building and MG&E Nine Springs Substation. • Keep substation access outside of primary controlled Plant perimeter fencing.	$4.7M (2023 CIP) - $12.1M (2024 CIP)
2.0	**BIOSOLIDS IMPROVEMENTS**			
2.1	**METROGRO LOAD-OUT IMPROVEMENTS**	Upgrades to the load-out facility.	• Expand at the existing load-out station location near the Metrogro Storage Tanks. • Abandon load-out use at Vehicle Loading Building. • Relocate Odor Control Soil Beds. • Realign service roads 'A' and 'AB' to accommodate Metrogro hauling traffic. • Metrogro haulers use Gate 1 for entry and exit. • Establish a secondary perimeter of security to allow Metrogro haulers unimpeded access during operating hours.	$5.7M
2.2	**METROGRO STORAGE AND MAINTENANCE FACILITY**	Relocate Metrogro operations from Vehicle Loading Building and consolidate Metrogro fleet storage and maintenance in one facility. Co-locate Fleet maintenance (Maintenance Shop No. 2) with Metrogro maintenance.	OPTION A • Located to the north of the Maintenance Facility Building. • Utilizes slope for a potential 2-story structure. • Fleet maintenance on the south side of the building shares the service road with the Maintenance Facility Building. • Shared fueling station with Maintenance Facility Building. • Metrogro equipment accesses the facility on the north side and is adjacent to the load-out stations and Pump Station. • Offices located within the building provide direct observation of the load-out stations. OPTION B • Located to the west of the Maintenance Facility Building and south of the Metrogro Storage Tanks. • Extension of the service road to the west is required. • Fleet maintenance occurs on the south side of the facility adjacent to Fleet storage in the Maintenance Facility Building. • Service road 'AC' is reconfigured to accommodate new facility. • Additional Metrogro fleet storage space is available to the west. FUTURE CONSIDERATIONS • Future Biosolids expansion reserved for 5-10 acres to the west of current storage tanks.	Either Option: $12.7M - $14M

CPIPP TITLE		DESCRIPTION	PLACEMENT CONSIDERATIONS	COST
3.0	**SEPTAGE RECEIVING IMPROVEMENTS**	Construct a new stand-alone Septage Receiving facility separate from the Headworks building to include up to four (4) volume metered, drive-through unloading stations.	OPTION A • Situated between the Headworks building and Metrogro storage tanks. • Shares access with Metrogro Haulers via Gate 1. • Reconfigure roadways to allow for drive-through unloading. OPTION B • Situated to the east of the Maintenance Facility Building. • Haulers enter the Plant through an improved Gate 3 on Moorland Road and immediately turn right into the Septage Receiving Facility. Haulers can drive through and either exit via Gate 3 or exit via a dedicated exit on Moorland Road.	Either Option: $4.0M - $5.0M
4.0	**HEAT AND POWER IMPROVEMENTS**	Potential power improvements include either cogeneration or biogas pipeline injection. A determination on the best path forward for the District requires additional study. This plan provides infrastructure placement considerations for both options.	• Program not defined due to additional study needed. • Cogeneration may need 6,600 SF or the equivalent of the current Gas Skid and Sludge Control Building No. 2 footprint (120’ x 55’). • Biogas injection program to-be-determined. • Cogeneration improvements should be located near existing power generation facilities (Sludge control and Boiler buildings) and in conjunction with heat loop improvements. • Biogas injection infrastructure does not have identified placement constraints. Based on existing treatment plant infrastructure, preferred locations are either on the east side of plant near solids processing or to the south of the MG&E (Madison Gas and Electric) substation. • Biogas injection will require a gas pipeline connection to utility provider services.	$50,910,000 (per 2023 CIP)
5.0	**LIQUID PROCESSING PHASE 2**	Delivery and treatment (low DO). Replacing existing east and west blowers, and electrical switchgears. There may be a need to expand the West Blower Building to accommodate new blower equipment.	• Potential expansion has not been studied for size requirements or determination of need. • Reserve space directly adjacent to West Blower Building for expansion.	$43,900,000 (per CIP 2024) • EPIC-$1.3M • Low DO Partial Plant-$3.6M • Low DO Full Plant-$19M • West Blowers & SG - $10M • East Blowers & SG - $10M

CPIPP TITLE		DESCRIPTION	PLACEMENT CONSIDERATIONS	COST
6.0	**CAMPUS SECURITY/SAFETY IMPROVEMENTS**			
6.1	**ACCESS CONTROL/ ADMINISTRATIVE BUILDING**	Facility for public reception and control measures for primary and secondary entrances to increase the District's Protective Measure Index score for physical security as assessed by the Department of Homeland Security. Due to the limited expansion potential of the current Operations building, it is recommended to relocate existing functions to a new Administration Building to allow space for core Operations function expansion.	• Create a Plant 'Hub' by expanding the Maintenance Facility building to the west for administrative functions. • Realign Gate 3 entrance to the east to align with neighborhood street and create a primary entry into the Plant for visitors, employees, and deliveries. • Visitor parking is located to the south of the building along Moorland Road, outside of a controlled perimeter fence. • Employees and deliveries enter the Plant through a controlled access gate. • A Primary perimeter fence will encompass primary Plant functions and establish around-the-clock controlled gate access. • A Secondary perimeter fence allows Metrogro and Septage Hauler access to their facilities without gate control during operating hours. Employee parking could also be within a secondary perimeter fence to reduce traffic flow through controlled access points. • Remove residential home to reduce Plant liability and reserve for future Plant functions.	$19,400,000-22,500,000 (assume LEED certification)
6.2	**SITE CIRCULATION**	Improve internal Plant circulation routes to mitigate conflict areas and provide separate facilities for pedestrians and bicyclists where appropriate. This may be done with CPIPP 6.1 or with other CPIPP projects needing circulation improvements or changes.	Pedestrian and Bicycle • Separate pedestrian and bicycle circulation from vehicular in areas of high traffic. • Connect to the Capital City Trail. • Connect to the bus stop on Moorland Road. • Reduce need to cross Raywood Road or Moorland Road to service Plant functions. • Reduce internal Plant vehicular circulation. Free up roadways for pedestrians and bicyclists. • Promote walking by locating staff functions near each other. Vehicular • In conjunction with CPIPP 2.0 and 3.0, modify heavy vehicle circulation routes to reduce overall conflicts and remove blind spots. Wayfinding • Name internal Plant streets and install street signs. • Add wayfinding signage at intersections, parking lots, and all publicly accessed facilities.	$460,000 - 600,000

CPIPP TITLE		DESCRIPTION	PLACEMENT CONSIDERATIONS	COST
7.0	**GENERAL WORKPLACE IMPROVEMENTS**			
7.1	**OPERATIONS BUILDING**	With the relocation of certain work groups to a new Administrative Building (CPIPP 6.1), this creates an opportunity to renovate the second floor of the Operations Building for remaining staff, and consideration of space for a lab expansion on the first floor.	• Second floor renovation • Lab Expansion	$8,720,000 - $10,000,000
7.2	**MAINTENANCE FACILITY BUILDING**	Renovation and expansion to the Maintenance Facility Building to accommodate functions currently housed in Storage Buildings No.1 and 2, and Maintenance Shop No. 2. Relocate inventory functions to allow for staff expansion and expand parts storage and staging areas.	• Expand staff workspace • Expand/Relocate Storage and Receiving to consolidate and centralize maintenance inventory and equipment in one location (includes chemical storage). • Expand Fleet storage, include infrastructure for electric fleet vehicles.	$9,330,000 - $10,300,000
8.0	**PLANT EXPANSION AND TERTIARY TREATMENT**	Additional secondary treatment capacity and/or the addition of tertiary treatment processes.	Secondary Treatment Expansion • Conservative estimate of space needs is 10-15 acres. • Located to the west of Biosolids End-use Building, extending to the western Plant boundary. • Expansion to the northwest is limited due to wetlands. Tertiary Treatment • Located to the east of the Effluent building. • Requires removal of Storage Building No.1.	N/A
9.0	**PLANT-WIDE STORMWATER SYSTEM**	With the eventual incorporation of the Nine Springs Wastewater Treatment Plant into the City of Madison and the availability of space due to the relocation of storage functions, a plant-wide stormwater management facility is recommended.	• Along existing drainage patterns and low areas. • Northeastern corner of the Plant in the vicinity of Storage Buildings No.1 and 2, and Maintenance Shop No.2. • Between Effluent Storage Reservoir No.2 and Raywood Road.	$2,180,000
10.0	**SOLIDS DIGESTION EXPANSION**	Expansion of the solids digestion process to accommodate organic solids process, high-strength waste, and increases in accepted waste for energy production.	• Realign Raywood Road to the east. • Realign Raywood Road and Moorland Road intersection, add a roundabout. • Additional 4-4.5 acres captured within contiguous Plant area • Area could accommodate additional digesters and a High Strength Waste Facility. • An option for a stand-alone High Strength Waste Facility.	$4,840,000 (Raywood Road Realignment only)

NINE SPRINGS WASTEWATER TREATMENT PLANT | CAPITAL PROJECT INFRASTRUCTURE PLACEMENT PLAN

FULL BUILD EXHIBIT | MAY 10, 2023

Madison Metropolitan Sewerage District

TKDA

Chapter One: Overview

Introduction

As the Madison Metropolitan Sewerage District (the District or MMSD) has grown, decisions where to locate new infrastructure have been accomplished on a project-by-project basis. The District has determined this approach is not sustainable. The District desires to develop a Capital Project Infrastructure Placement Plan for the Nine Springs Wastewater Treatment Plant that satisfies the District's strategic priorities and identifies the preferred location of new infrastructure projects in such a way they do not interfere with future investments, do not create maintenance burdens, and allow for the safe movement of staff and visitors within the plant.

The benefit of this project is to guide the location of future capital projects and will consider:

1. Growth in personnel and growth in office space requirements
2. Modern office and IT needs
3. Staff safety, mobility, and wellness needs
4. Updated treatment and energy infrastructure
5. Maintenance facility, fleet, and general storage needs
6. Public access and security issues associated with the following:
    a. District educational activities
    b. Septage receiving
    c. Volunteers delivering water quality samples
    d. Developers and members of the public delivering permit applications
    e. General project meetings with external contractors and consultants
    f. Members of the public

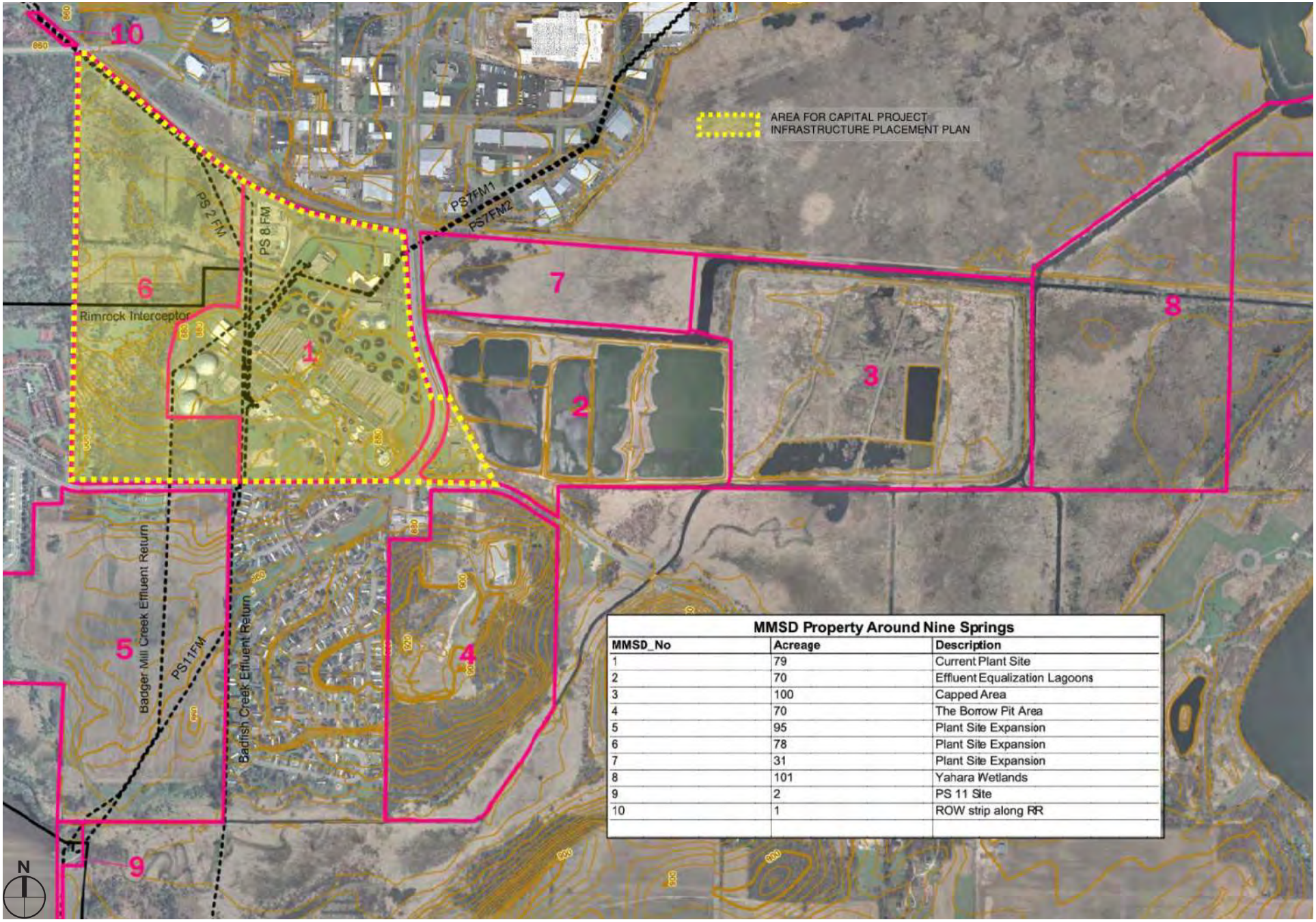

MMSD Property Around Nine Springs

MMSD_No	Acreage	Description
1	79	Current Plant Site
2	70	Effluent Equalization Lagoons
3	100	Capped Area
4	70	The Borrow Pit Area
5	95	Plant Site Expansion
6	78	Plant Site Expansion
7	31	Plant Site Expansion
8	101	Yahara Wetlands
9	2	PS 11 Site
10	1	ROW strip along RR

Figure 1.0 *Project Area*

The project also benefits the District and its customers because it sets forth an orderly approach to space utilization, site security, and storage at the Nine Springs Wastewater Treatment Plant and, as a result, will maximize the benefit of capital investments. It takes into consideration the following plans:

- 2020 Energy Management Master Plan
- Biosolids Management Plan
- Liquids Processing Facilities Plan
- Solids Handling Facilities Plan
- 50-Year Master Plan

Finally, it will recognize the District's continuing commitment to provide public engagement and education, which will be integrated into the plan.

The project will result in a Capital Project Infrastructure Placement Plan for the Nine Springs Wastewater Treatment Plant. The plan will include placement considerations for those Capital Project initiatives which would impact land use decisions. This includes projects previously included in the District CIP, future land use considerations, and newly identified initiatives as part of this planning process. Planning considerations will include illustrative plans identifying recommended locations along with a narrative describing the placement consideration. Planning level cost estimates are provided for those projects that may be completed within the next five to ten years.

The project does not include the following:

- Design of specific projects
- Analysis or selection of alternatives from previously adopted plans
- Budgetary impact analysis of the alternatives to the District's Capital Program.

Success Criteria

The project is successful if it:

1. Aligns with the District's Strategic Plan, including considering how best to support the District's seven strategic performance areas.
2. Provides information needed for District staff to prepare the 2024 Capital Improvements Plan.
3. It is implementable and is grounded in reality.
4. Reflects interests of District executive team.

Planning Process

The Capital Project Infrastructure Placement Plan is the result of a 6-month planning process designed to engage District staff on the space needs for future projects and initiatives. Phase 1 of planning involved research and review of background information and an understanding of existing conditions to inform the desired program for the Capital projects. During workshop 01, District staff were engaged in discussions regarding existing Capital Improvement Projects, furture Plant vision, current and future Plant operations and space needs. A Plant tour and staff interviews were conducted to develop the Existing Conditions Summary of Findings. The specific findings are discussed in the Plant Context, Site Analysis, and Building Functionality Assessment chapters.

Phase 2 of planning involved program development for Capital Projects included in the plan. Additional staff interviews were conducted, including meeting with septage haulers. A draft Programmatic Summary of Findings was developed and used to inform the alternatives presented during Workshop 02.

Phase 3 is a refinement of alternatives presented during Workshop 02 based on feedback from staff. Originally, three (3) alternatives were presented, because of the numerous variabilities in the alternatives because of certain impacts on various options for some projects, the approach to the plan pivoted and projects, with recommendations, are presented individually, but keep other project locations in mind to mitigate conflicts. This phase culminates in the final deliverable.

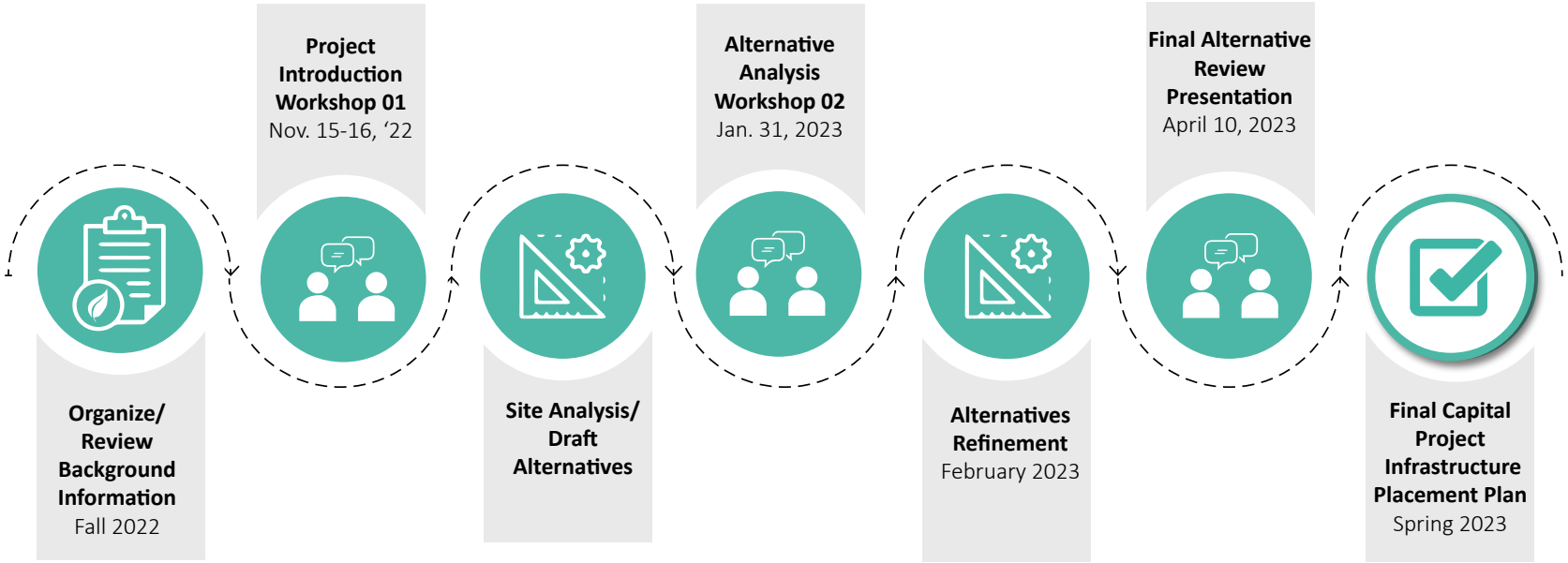

Project Goals

The goal of the project is to develop the Nine Springs Wastewater Treatment Plant Capital Project Infrastructure Placement Plan. The plan includes recommendations for the placement of ten (10) identified project considerations. Each project consideration will show recommended placement area(s) in an illustrated graphic, along with a narrative that describes the reasoning of site selection for each location or alternative location, if applicable. Associated costs will also be provided, in 2023 dollars for those project anticipated to be completed within the next five to ten years.

1. Locate new infrastructure projects aligned with strategic priorities
2. Consider future infrastructure and maintenance needs
3. Allow for safe movement of staff and visitors

Chapter Two: Plant Context

Location

The Nine Springs Wastewater Treatment Plant is located along South Town Drive/ Raywood Road and Moorland Road in the City of Madison and Town of Blooming Grove, Wisconsin. The Plant serves over 407,000 people within 187 square miles of Dane County and includes 25 cities, villages, and utility/sanitary districts. The Plant processes approximately 36 million gallons of wastewater daily.

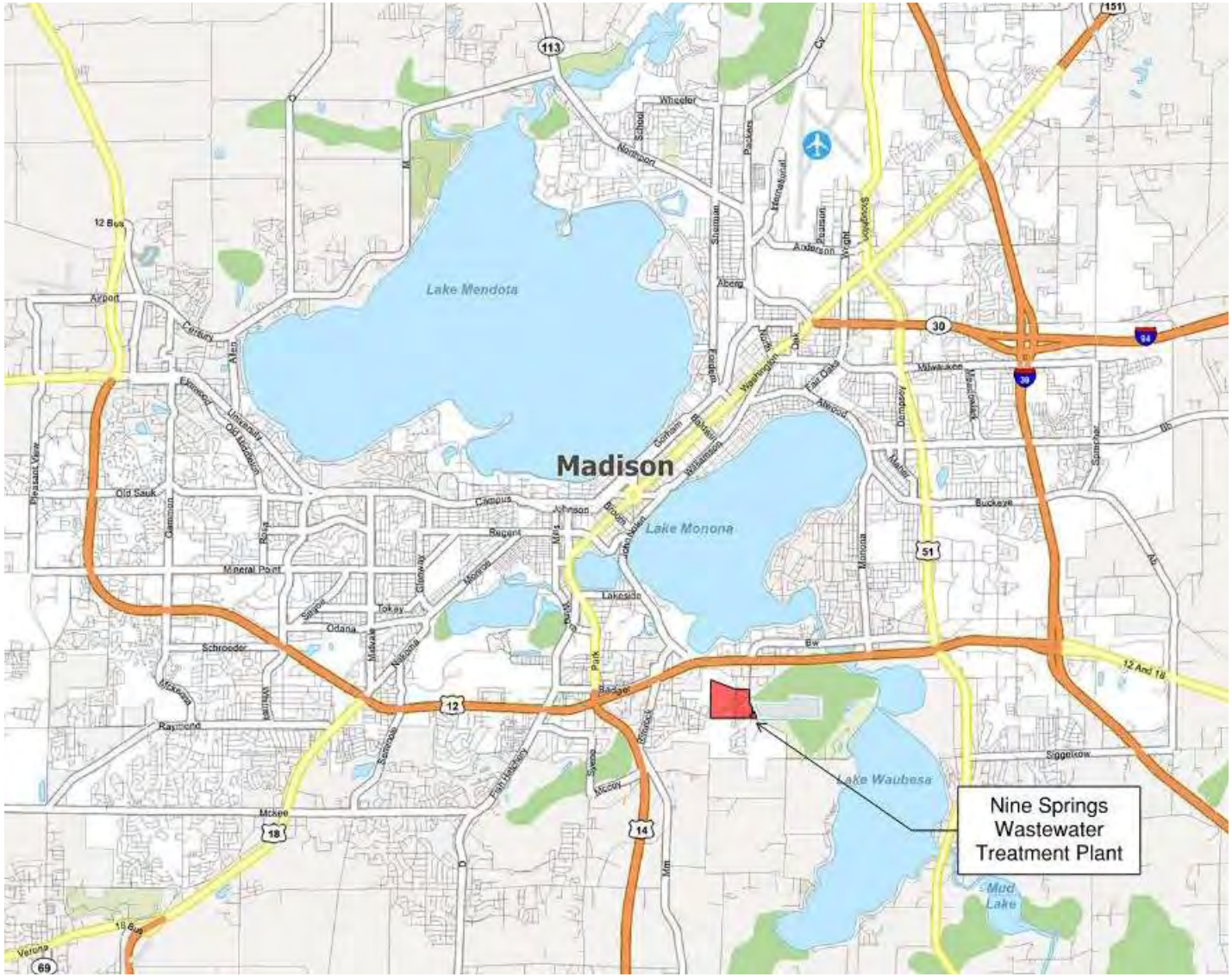

Figure 2.0 *Location Map*

Plant Development History

The Plant opened in 1930, taking its name from nearby Nine Springs Creek, and is one of the oldest regional sewer utilities in the United States. The plant has expanded its facilities 11 times since 1930. Expansion has occurred in a radial fashion out from the Plant center, in what is the current location of the Operations Building.

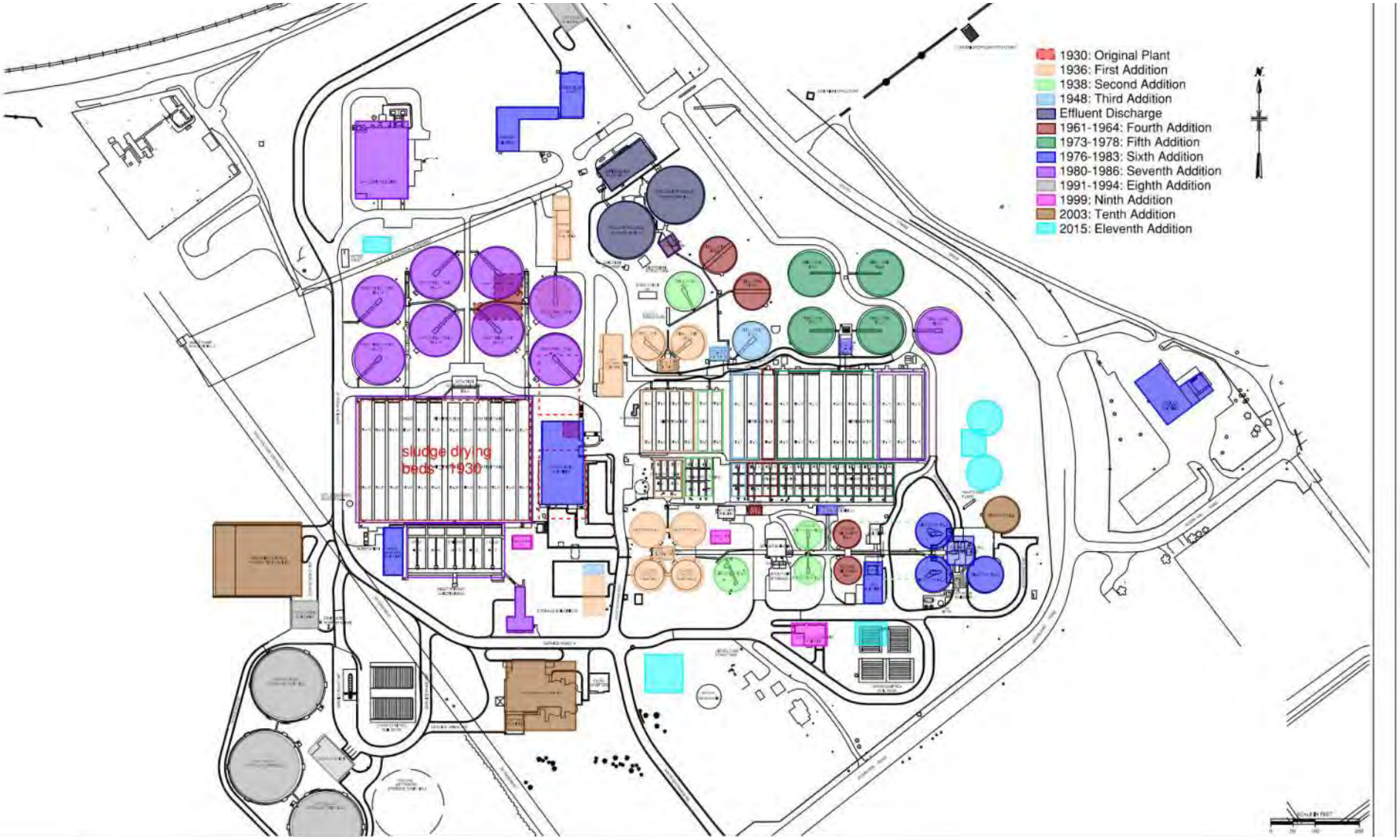

Figure 2.1 *Plant Development*

Community Character

The Plant is located at 1610 Moorland Road, west of South Town Drive/Raywood Road, in the Rimrock-Moorland neighborhood. The neighborhood is comprised of industrial, single and multi-family residential, and open space land uses on the southern boundary of Madison. The eastern portion of the Plant is currently within the Town of Blooming Grove. The City of Madison plans to complete annexation of the Town of Blooming Grove by 2027. The District is the largest single landowner in the neighborhood.

District parcels containing the main wastewater treatment plant functions are zoned Commercial/Industrial use. To the north of the Plant, separated by the Wisconsin and South Railroad line and the Capital City Trail, are industrial and commercial businesses. To the west of the Plant is the 7 Oaks multi-family residential development.

Moorland Road forms the southern boundary of the Plant, with additional District parcels to the south currently used for agriculture and wildlife management areas, as noted on the Capital Springs State Recreation Area plan. Also, directly south of the plant across Moorland Road between two District parcels is the Highland Manor single-family residential community. Raywood Road/South Town Drive forms the eastern border of the Plant, with marsh and lagoons to the east.

The western portion of the Plant is predominantly wetlands and low-quality woodland. A small community garden is in the southwest corner. This creates the edge condition between the District parcels and the single and multi-family residential development to the west.

The Plant is also situated along the Lewis Nine Springs E-Way, a large ecological network of streams, wetlands, ponds, and recreation areas along the southern edge of Madison and forms a natural transition between urban Madison and agricultural land use to the south.

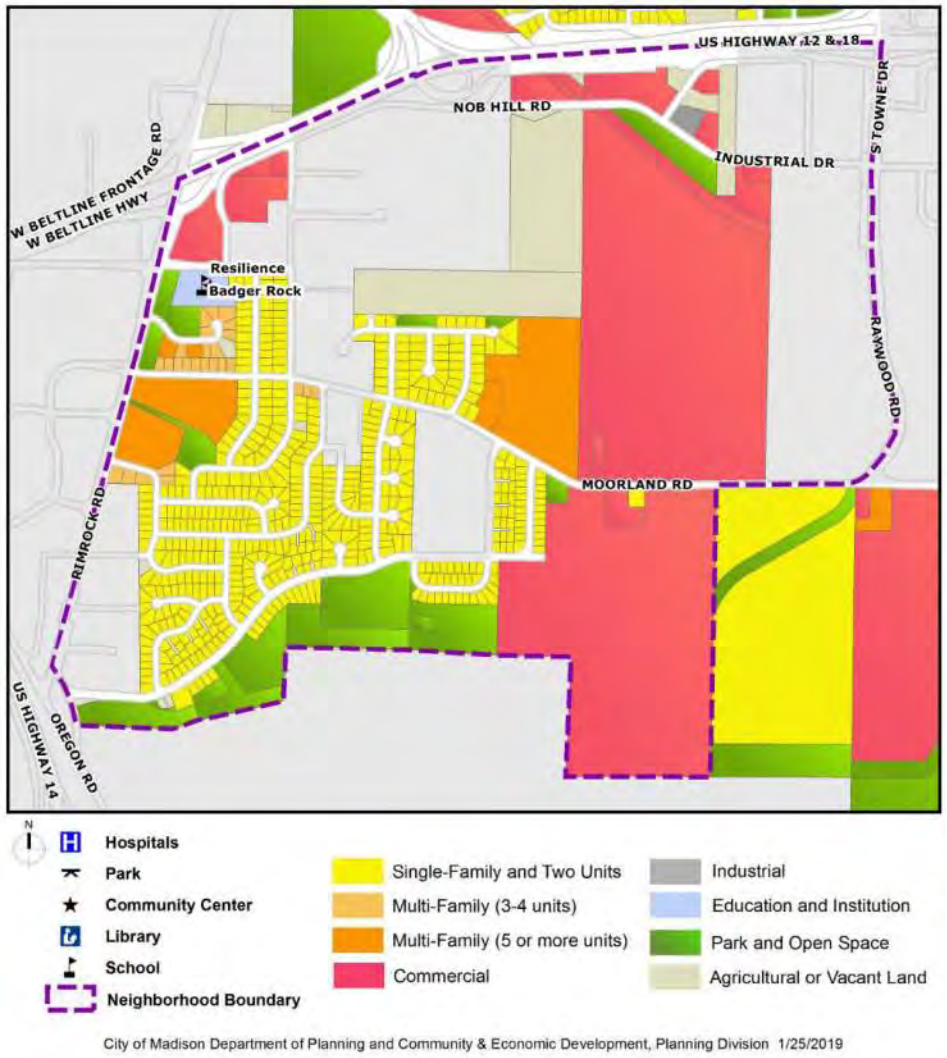

Figure 2.2 *Rimrock-Moorland Neighborhood Land Use*

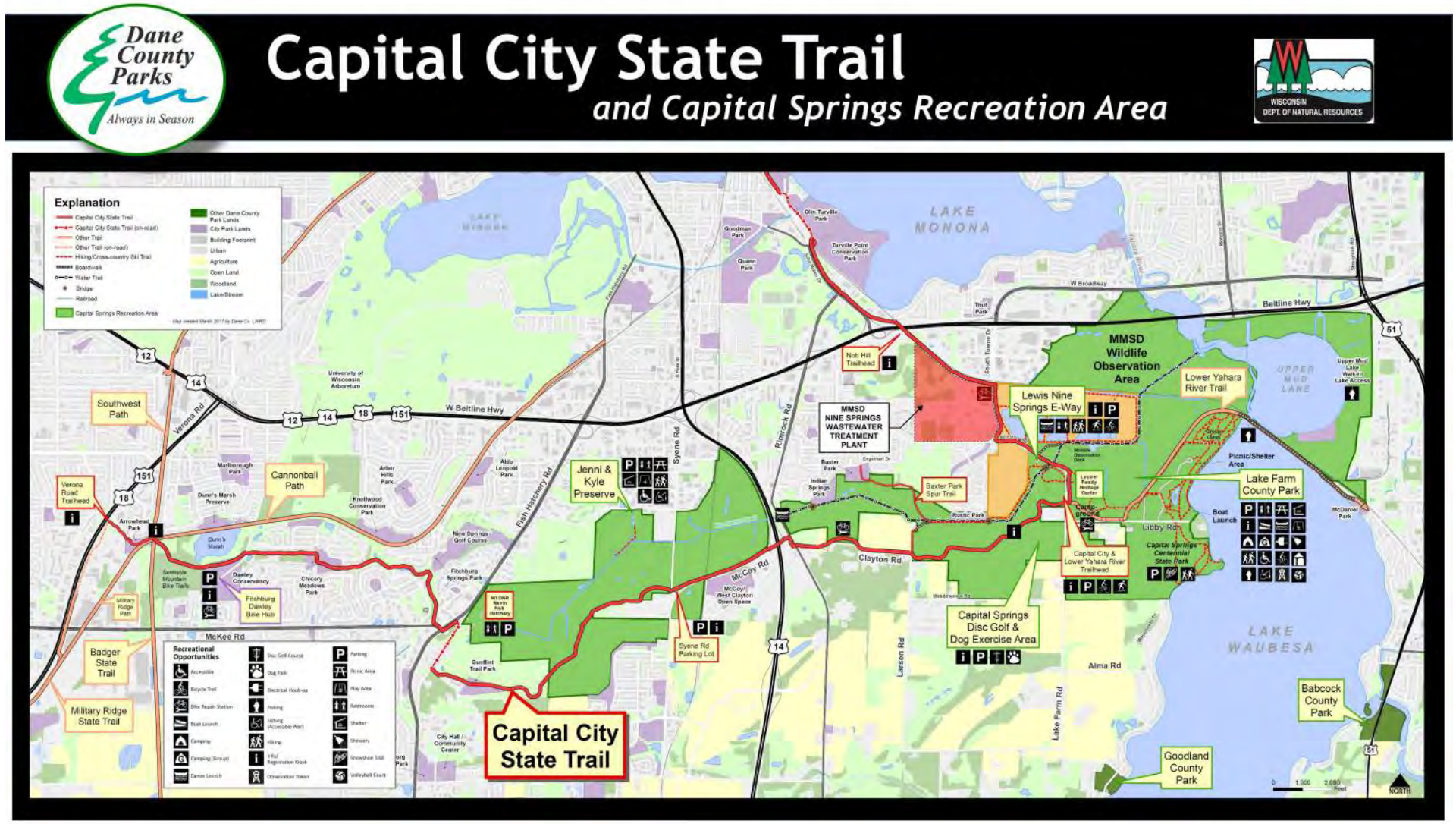

Figure 2.3 *Lewis Nine Springs E-Way*
https://www.friendsofcapitalsprings.org/wp-content/uploads/2020/12/CSRA-2017-EWAY-STAR-1024x597.png

THIS PAGE INTENTIONALLY LEFT BLANK

Chapter Three: Operations & Staffing

MMSD Organization Chart

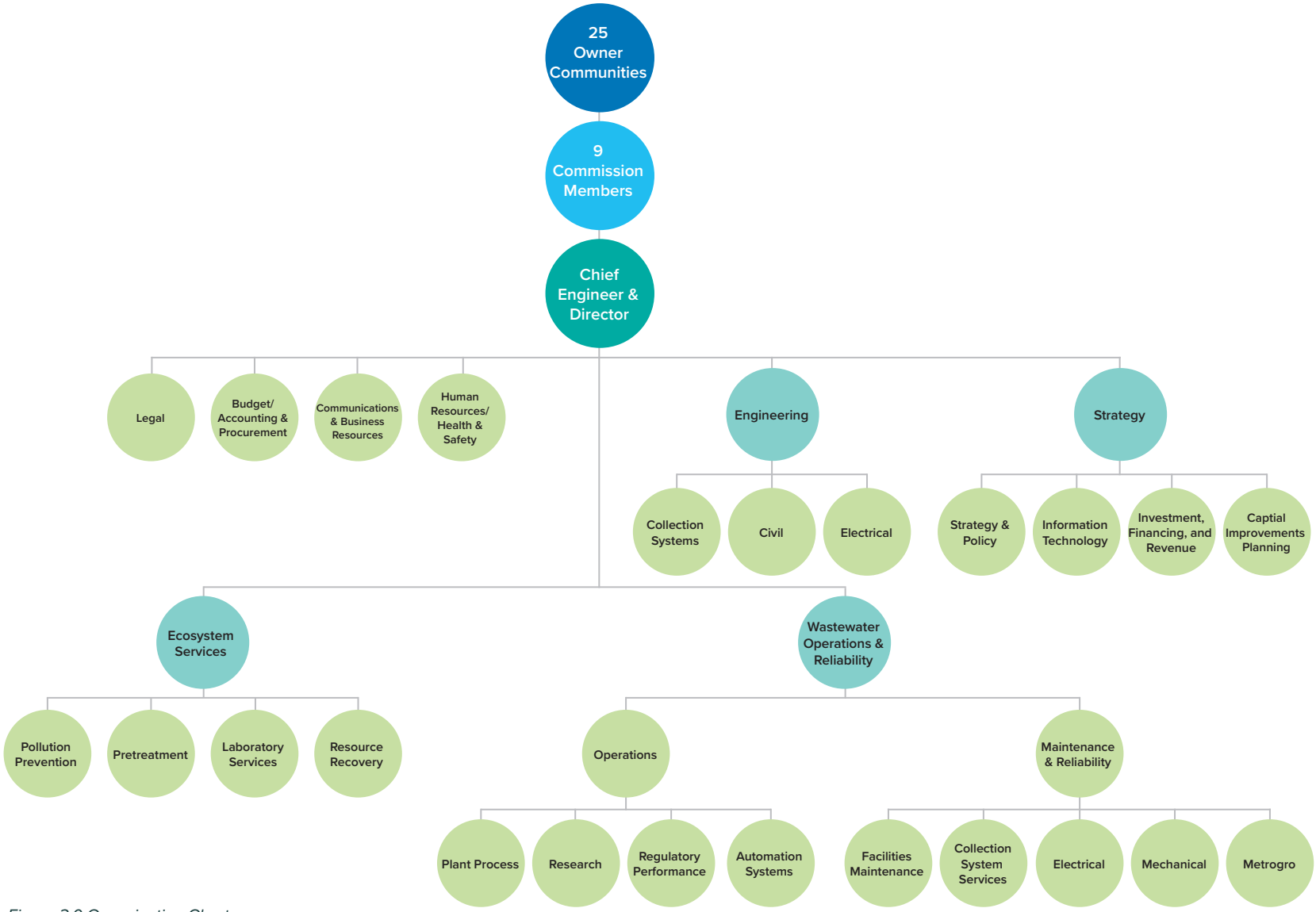

Figure 3.0 Organization Chart

Plant Staff

DEPARTMENT	FTE (2023)	PROJECTED FTE INCREASE (10 YEARS)
District Leadership and Support	17.5	5-7
Ecosystem Services	14	1-3
Engineering	12	2-5
Planning and Strategy	15	1-3
Maintenance and Operations	67	10-15
TOTAL	**125.5**	**11-22**

Table 3.0 Full Time Employment & Projected Increase by Department

Plant Operating Hours

- Plant operates continuously 24 hours per day, 365 days per year
- Established Plant hours (Gates Open): 6am – 6pm Monday - Friday
- Plant staff hours: 6am – 4:30pm, except for Plant operators

Metrogro Operations

Metrogro operations are divided between two locations on the Plant, the Metrogro Vehicle Loading Building (VLB) at the corner of Raywood Road and Moorland Drive and the Metrogro Pumping Station and Storage Tanks located on the western edge of the Plant, north of the Maintenance Facility building. See Appendix F for Metrogro meeting notes.

- Operating Season (weather dependent):
  - Spring: early April through first week in June
    - Summer: July- September, minimal operation
    - Fall: October to freeze-up, around Thanksgiving
- Operating Hours:
  - 6am - 6/6:30 pm (last load out 6:30 pm)
  - Spring/Fall: 7 days per week
  - Summer: 5 days per week
  - Metrogro staff and haulers will work weekends if it is wet during the week
- Typical Operations:
  - Seventeen (17) Metrogro semi-trucks station at the Vehicle Loading Building (VLB) in the morning as contractors/drivers get orders. Trucks are then loaded at either the VLB or Metrogro Pump Station.
  - Trucks enter the VLB from Moorland Road, drive into the building for loading and drive out and exit on Raywood Road. Both driveways cross the Capital City Bike Trail, which can cause conflicts between trucks, pedestrians, and bicyclists.
  - Trucks loading at the Metrogro Pumping Station enter the Plant through Gate 4, drive to the uncovered loading area, then drive around the Plant and exit via Gate 1.
  - Average 170-204 trips daily.
  - Time between loads (vehicles stay within 30 miles of the plant) 45 minutes is a short round, 1.5 hours for a longer round.

Septage Hauler Operations

There are approximately 40 approved septage haulers using the Plant septage receiving service. Septage is received at the Headworks building. See Appendix F for Septage Hauler meeting notes.

- Operating Season: year-round
- Operating Hours:
  - Haulers work within established Plant gate hours: 6am -6pm M-F, District staff open gates at 5 am weekdays and for emergencies on weekends to accommodate Haulers.
  - Weather and staffing affect arrival/delivery times
- Typical Operations:
  - Haulers enter the Plant through Gate 4, drive to the Headworks building to unload Septage at the receiving trough, then exit the plant via Gate 1.
  - Septage receiving can accommodate two (2) trucks at a time in a covered area.
  - Haulers maneuver around each other within the Plant with approximate waiting times anywhere from 0 to 20 minutes or more, dependent on number of trucks in the queue.
  - Average of 55 trucks per day, Monday – Friday, with an average volume of 2,600 gallons per truck. Over a typical year, the Plant receives 100,000 gallons per operational day.

THIS PAGE INTENTIONALLY LEFT BLANK

Chapter Four: Site Analysis

A site analysis is a key step in a planning process to provide crucial information about the physical and environmental characteristics of a site to inform building placement decisions that are functional and responsive to its surroundings.

Current Land Use

The Plant is organized into three main functional areas, Plant process, maintenance facilities, and Metrogro (Biosolids). Plant process, which includes primary and secondary wastewater treatment functions, is central to the property; maintenance functions are separated in the northeast and southwest corners of the site and Metrogro operations is divided between the southeast corner of the site and to the west of process functions.

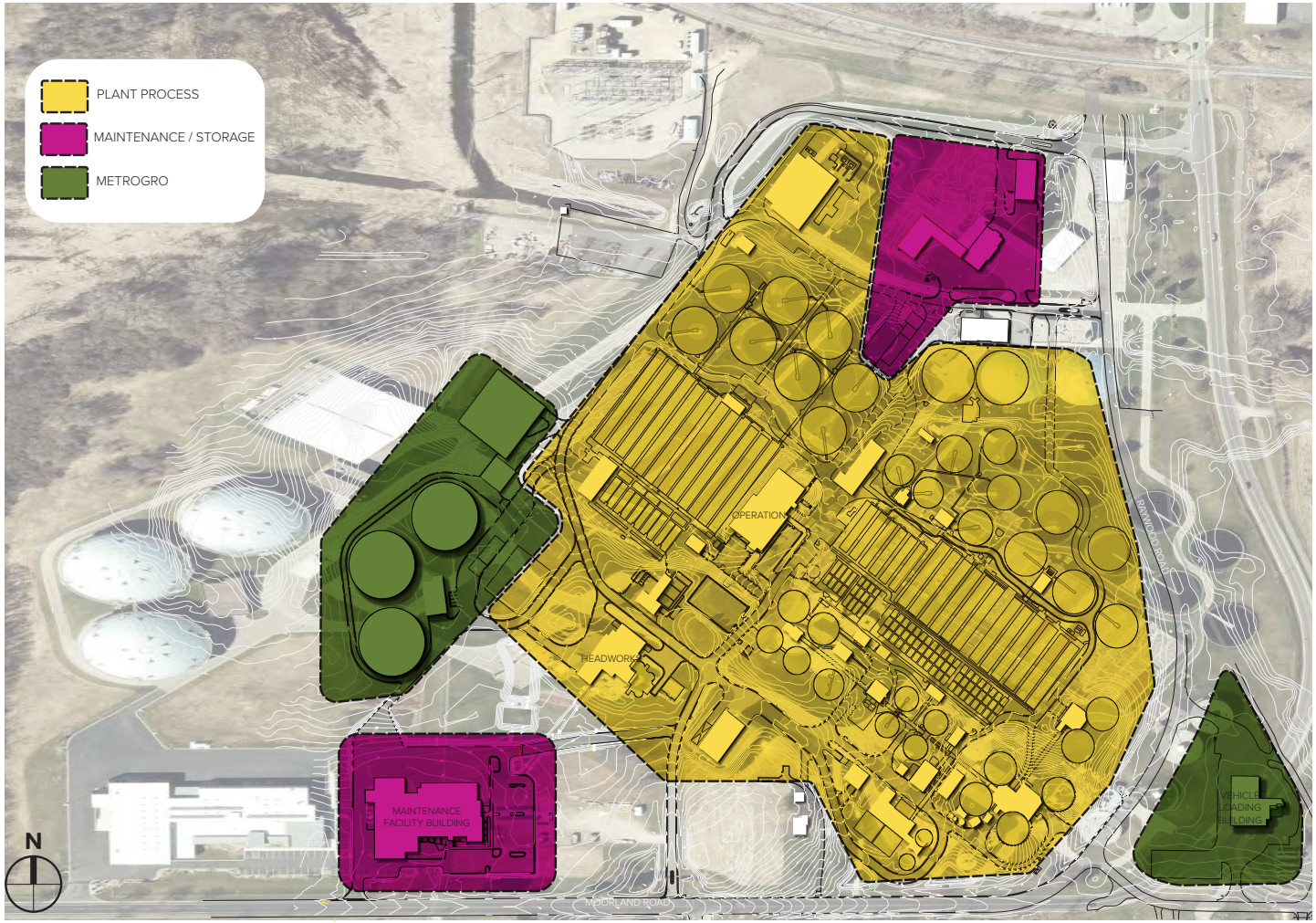

Figure 4.0 *Site Land Use*

Figure 4.1 Ecological Systems

Topography

Slopes in the Plant run from the high point on the south side along Moorland Road to a low area to the north. The site elevation drops 40-50 feet to both the northeast and the northwest. Before development, a small stream flowed where the current service road is adjacent to the Effluent Building and Shop One. This natural slope is a benefit for the wastewater treatment process where wastewater arrives to the Plant at the Headworks building and flows via gravity pipes during the treatment process. Many buildings on the site are built into the slope, which can pose a challenge for pedestrian accessibility.

Hydrology

The Plant is within the Nine Springs Creek watershed. The watershed comprises Nine Springs which drain into Nine Springs Creek, eventually flowing into Upper Mud Lake. Drainage within the Plant follows the natural topography and flows south to north on the site. Due to Plant development, there is little on-site stormwater management, except infiltration basins to the north of the Maintenance Facility Building. Plant roadways direct most surface flows to low areas or catch basins. A portion of stormwater is collected and discharged into the wastewater treatment process and the remaining stormwater is directed to a collector pipe that flows from west to east and daylights in the wetland complex east of South Towne Drive.

Due to time of development and LEED certification, the Maintenance Facility Building incorporates stormwater management into the overall landscape design, recognizing the ecological benefit of managing stormwater on-site. Rainwater is captured from the roof and treatment is integrated as part of the site landscape. The stormwater from the building and parking lots is then directed to a series of infiltration basins located north of the building.

Ecology

The Plant is located within the Southeastern Wisconsin Till Plains Level III ecoregion in the classification system of the United States Environmental Protection Agency (EPA), where it is designated as ecoregion number 53. The ecoregion represents a transition between the hardwood forests and oak savannas to the west and the tallgrass prairie ecoregions to the south; today it is mostly covered by cropland.

This region supports a mix of agriculture (mostly cropland and dairy operations) and woodland. Crops include forage crops to support the dairy operations and a wide range of specialty crops. Most of the original vegetation has been cleared with forested areas remaining only on steeper hillsides/bluffs and poorly drained depressions. Irregular till plains, steep hillsides, marsh potholes, and drumlins are common, and wetlands are found throughout the region, especially along ridges. The potential natural vegetation (PNV) of this region is transitional with a mosaic of sugar maple, basswood, and oak to the east and an increasing amount of white, black, and bur oak, oak savanna, prairie, and sedge meadows toward the west.

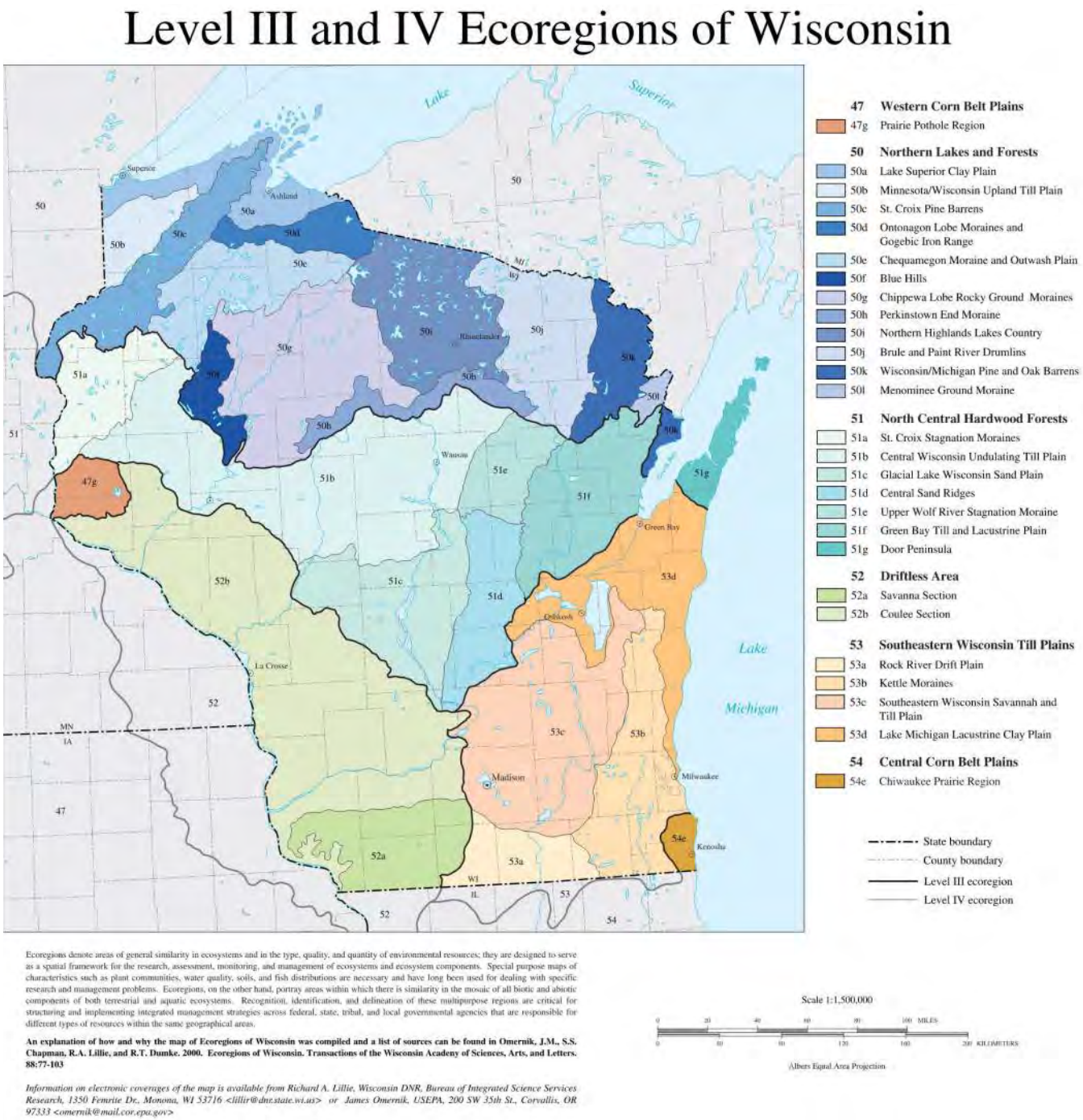

Figure 4.2 *Ecoregions of Wisconsin*

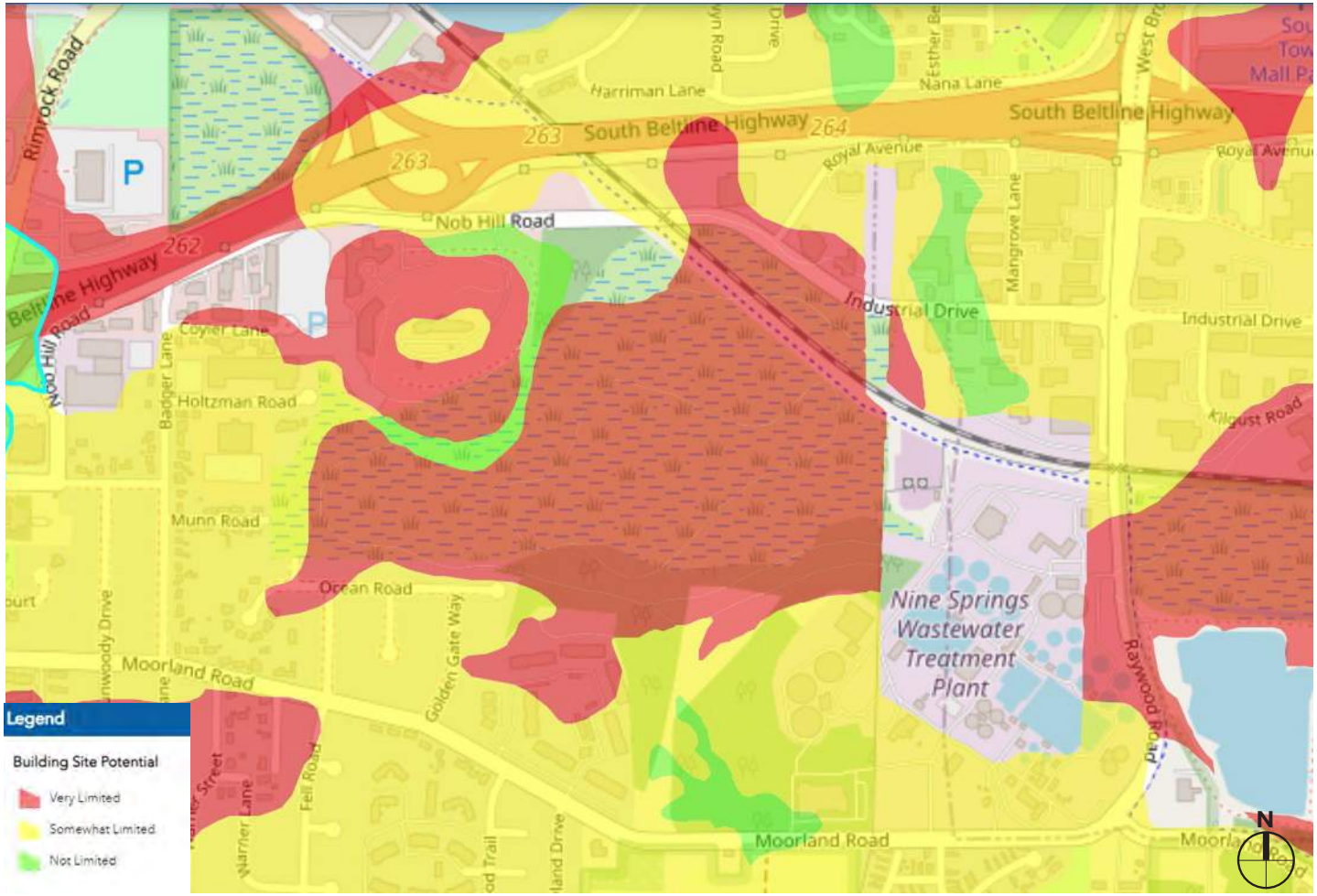

Figure 4.3 *Soil Suitability for Building*

Currently, the Plant site is mown turf with informal landscaping of evergreen and deciduous trees in developed areas on the eastern portion. The western undeveloped portion of the property is comprised of low-quality woodland on the south and marshland plants to the north.

Soils

Peat soils are predominant throughout the marshlands of the Nine Springs Creek watershed, including the northern part of the Plant. The southern portion of the Plant contains soil suitable for building.

Site Circulation

Pedestrian and Bike

Pedestrians and bicyclists can reach the Plant via the Capital City Bike Trail. The trail is adjacent to the Plant on the northern boundary and crosses South Town Drive just north of Gate 1, see descriptions for Plant gates in the next section. There aren't any direct pedestrian or bike connection to the Plant. There is a lack of pedestrian and bicycle facilities within the Plant itself. Sidewalks link parking lots to adjacent buildings. Pedestrian and bicyclist movement throughout the Plant, including plant tour groups, share the road with vehicular traffic, including Metrogro semi-trucks and applicators, and Septage Hauler trucks.

Vehicular

The Plant has one address for the entire facility, 1610 Moorland Road. Since there is only one address for the entire Plant, this creates confusion among visitors and guests on which entrance to use to reach their destination. The District website provides a map for directions to the Operations Building. Most visitors and guests come to the Plant for either a tour, starting at Shop One; a meeting, at either the Operations Building or the Maintenance Facility Building; or to drop off samples. Deliveries are received at either the Operations Building or the Maintenance Facility Building.

There are five (5) access points into the plant, these are referred to as Gates, with the exception of the residence driveway.

Gate 1

The northern-most gate and is located off South Town Drive.

- One of two (2) primary entrances to the Plant
- Located on the northern boundary, just south of the railroad tracks and Capital City Bike Trail crossing. Drivers may miss this gate due to attention at railroad and bike trail crossings
- Gate is not well-marked with signage or landscaping
- Sliding chain-link gate with key-card operation
- Provides access to MG&E (Madison Gas & Electric) NIne Springs Substation

Gate 2

One of the original Plant entrances and is located south of Gate 1 on South Town Drive.

- Only open if Gate 1 is malfunctioning and for public events at Shop One
- Well-signed, with brick monument signage, and landscaped
- Gives the impression of a primary entrance
- Sliding chain-link gate, keyed access

Figure 4.4 Gate 1

Figure 4.5 Gate 2

Gate 3

Gate 3 entrance is on the south side of the Plant along Moorland Road and has been closed since Gate 4 opened with the Maintenance Facility Building. A pedestrian gate was installed in December 2022 to allow access from the Plant to the bus stop (Bus Route 16) located on the east side of Gate 3 and across from the Highland Manor community.

- Well-signed, with brick monument signage matching Gate 2 and landscaped
- Gives the impression of a primary entrance
- Sliding chain-link vehicular gate , key card access
- Pedestrian gate

Gate 4

Gate 4 is the newest entrance into the Plant and is the primary ingress/egress for deliveries, staff, and visitors to the Maintenance Facility Building. It also is the entrance for Metrogro vehicles and septage haulers. Due to high traffic and the entrance adjacent to the Maintenance Facility Building, there is a blindspot at the southwest corner where the parking lot entrance and vehicle maintenance bays intersect with the roadway, causing vehicular conflicts on the west side of the Maintenance Facility Building. This is also the location of the loading dock for the Vehicle Maintenance Building.

Located to the west of Gate 3 on Moorland Road.

- One of the Primary gates, recently opened in 2016 with the Maintenance Facility Building
- Sliding chain-link gate, remote controlled
- This gate has no signage and minimal landscaping

Residential Gate

This gate controls access to the single-family home leased out by the District. The entrance is marked with a residential mailbox.

- Located at 1600 Moorland Road, east of Gate 3
- Sliding chain-link gate, key pad access
- Gate is predominantly left open

Figure 4.6 Gate 3

Figure 4.7 Gate 4

Figure 4.8 Residential Gate

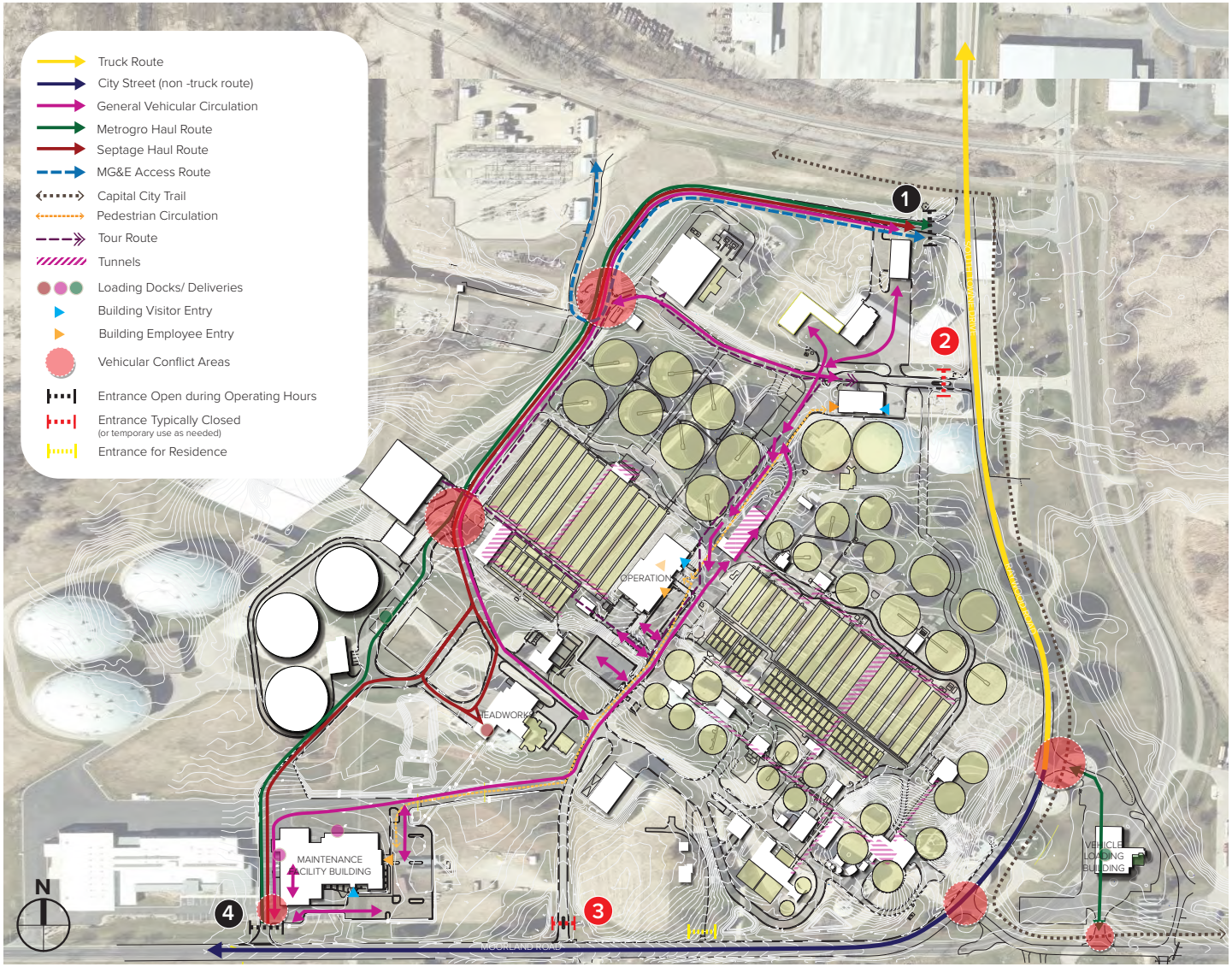

Figure 4.9 Existing Circulation

Maintenance and staff circulation within the Plant mainly occurs between the Maintenance Facility Building, the Operations Building, and the Storage and Service Buildings.

Plant roadways are unnamed and lack way-finding signage, which causes confusion for visitors, guests, and delivery drivers. The primary vehicular circulation route through the Plant occurs between Gate 1 and Gate 4. Due to the narrow roadway width and use by large Metrogro equipment, septage haulers, and maintenance vehicles creates many traffic conflict areas, notably where the roadway curves near the MG&E substation and at the intersection of roadways near the Effluent building.

Safety/Security

The Department of Homeland Security Cybersecurity and Infrastructure Security Agency (CISA) leads the national effort to understand, manage, and reduce risk to our cyber and physical infrastructure. Property treating wastewater is vital for preventing disease and protecting the environment. Therefore, the Department of Homeland Security and CISA has determined wastewater systems are considered National Critical Functions. In its review of the Nine Springs Plant conducted in 2019, primary concerns were with lack of consistent security fencing and consolidated, monitored access points.

Primary buildings receiving visitors, guests, and deliveries are Operations Building, Maintenance Facility, and Shop One. Each of these buildings are spread-out in the Plant. All visitors and guests are required to check-in either at the Operations building, which is in the center of the Plant; or the Maintenance Facility along Moorland Road. This can cause confusion for visitors and guests when trying to find their destination.

Building Controls

The district's main operational buildings, the Operations building and Maintenance facility, have controlled access. The building access controls range from FOB card access, physical key access, and visitor guest check-in desks. There is protocol in place for all visitors to check-in at the Operations building.

Process and storage buildings do not have access control except physical key access.

Fleet Storage and Parking

Currently, there are 207 personal vehicle parking stalls in the Plant, including five accessible stalls. There is a small parking lot to the east of Shop One to serve events and tours and serves as the bus drop-off area for school groups. The Operations Building has a small parking lot directly in the front of the building, along with parking lots to the south. Due to the building's design into the site topography, upgrades were needed for accessibility from the parking lots to the building entrance. This involved the construction of a bridge over the entrance of the subgrade parking area. Fleet storage is limited to the small subgrade parking area.

The Maintenance Facility has a parking lot for visitors to the south and a larger parking lot to the east for staff and visitor overflow. Parking is also located throughout the Plant for fleet/maintenance vehicles and deliveries.

Equipment lists on the following pages show the extent of the various types of equipment stored on site and their locations. Metrogro Operations has the largest equipment and it is currently stored across three (3) spearate areas of the Plant.

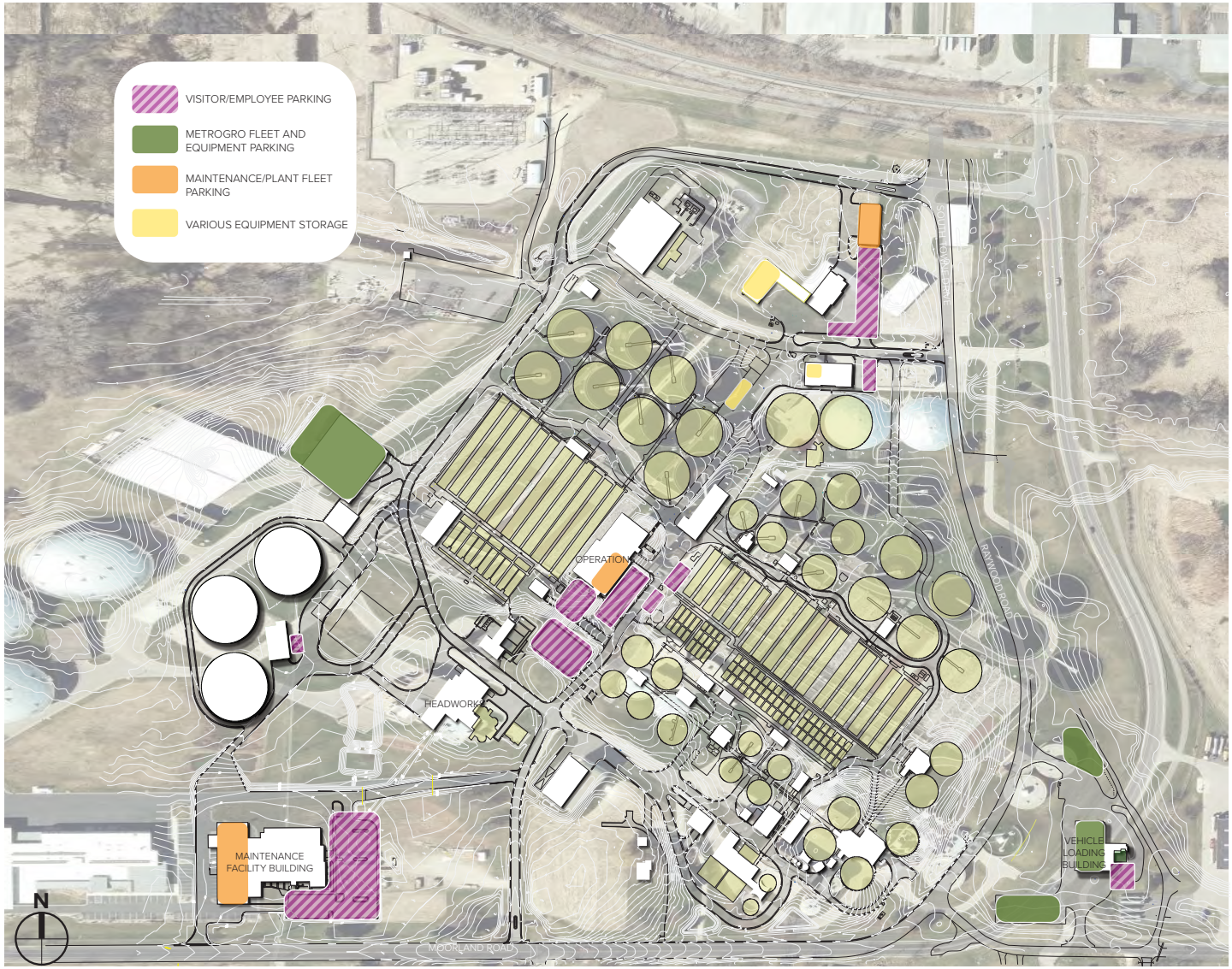

Figure 4.10 Parking and Fleet Storage

Year	Make	Model	Vehicle Type	Storage Location
1986	GMC		Truck	Storage Building 1
2000	Chevy	3500	Flatbed	
2000	GMC	Sierra	Service Truck	
2002	Ford	F250	Pickup	
2003	GMC	Sierra	Pickup	VLB
2003	GMC	Sierra	Service Truck	MF Garage
2004	Ford	Ranger	Pickup	Operations
2004	Aluma		Trailer	Shop One
2005	Chevy	Colorado	Pickup	Operations
2005	Chevy	Express	Cargo Van	Operations
2005	GMC	Sierra	Service Truck	MF Garage
2006	Dodge	Grand Caravan	Minivan	MF Garage
2006	Dodge	Caravan	Minivan	MF Garage
2007	Ford	Ranger	Pickup	MF Garage
2007	Dodge	Ram	Pickup	
2007	Ford	Econoline	Cargo Van	MF Garage
2008	Chevy	Uplander	Minivan	Operations
2008	Ford	F150	Pickup	MF Garage
2008	Ford	F150	Pickup	VLB
2008	Ford	F150	Pickup	MF Garage
2008	Dodge	Ram	Pickup	MF Garage
2009	Ford	Focus	Sedan	MF Garage
2009	Ford	Econoline	Cargo Van	MF Garage
2011	Ford	F350	Dump box truck	MF Garage
2011	Ford	F350	Flatbed Utility Truck	MF Garage
2011	Ford	F450	Service Truck	MF Garage
2012	Ford	F350	Service Truck	MF Garage
2012	Ford	Econoline	Cargo Van	MF Garage
2013	Ford	F150	Pickup	VLB
2014	Ford	F350	Service Truck	MF Garage
2014	Ford	Econoline	Cargo Van	MF Garage
2014	Ford	Transit	Cargo Van	MF Garage
2015	Ford	Transit	Cargo Van	MF Garage

Table 4.0 Updated from August 2018 Fleet Management Plan

Year	Make	Model	Vehicle Type	Storage Location
2016	Nissan	Leaf	Sedan	Operations
2016	Ford	F250	Pickup	MF Garage
2017	Dodge	1500	Cargo Van	MF Garage
2017	Ford	F150	Pickup	MF Garage
2018	New Holland	T5.110		Storage Building 1
2019	Ford		Truck	MF Garage
2019	Ford	F350	Truck	MF Garage
2019	Ford		Truck	MF Garage
2019	Ford	F350	Truck	VLB
2019	Nissan	Frontier		MF Garage
2019	Nissan	Frontier		MF Garage
2020	Dodge	RAM 1500	Truck	MF Garage
2020	Dodge	Ram 3500	Truck	MF Garage
2020	Dodge	RAM 1500	Truck	Ops Buidling
2020	Nissan	NV200 SV		MF Garage
2020	Dodge	Ram 2500	Truck	MF Garage
2021	GMC	Canyon	Truck	Ops Buidling
	Bobcat	Skid Steer		Storage Building 2
	Bobcat	Tool Cat		Storage Building 2
	Electric Carts	6 total		MF Garage
	Electric carts	3 total		Ops Buidling
	John Deere	End Loader		Storage Building 1
	Var. Lawn Mowers and ATV			Service Building

Year	Make	Vehicle Type	Storage Location
2021	OXBO	Applicator	End Use Building
2004	Ag-Chem	Applicator	End Use Building
2005	Ag-Chem	Applicator	Metrogro Parking
2006	Ag-Chem	Applicator	End Use Building
2005	Ag-Chem	Applicator	End Use Building
2008	Ag-Chem	Applicator	End Use Building
2019	Oxbo	Applicator	Metrogro Parking
2022	Oxbo	Applicator	End Use Building
1993	Ford	Semi-Tractor	Metrogro Parking
1993	Ford	Semi-Tractor	Metrogro Parking
1995	Ford	Semi-Tractor	Metrogro Parking
1995	Ford	Semi-Tractor	Metrogro Parking
1995	International	Semi-Tractor	Metrogro Parking
1995	International	Semi-Tractor	Metrogro Parking
2021	Brenner	Tanker Trailer	Metrogro Parking
2000	STE	Tanker Trailer	Metrogro Parking
2000	STE	Tanker Trailer	Metrogro Parking
2004	STE	Tanker Trailer	Metrogro Parking
2004	STE	Tanker Trailer	Metrogro Parking
1999	STE	Tanker Trailer	Metrogro Parking
1999	STE	Tanker Trailer	Metrogro Parking
1997	Presvac	Tanker Trailer	Metrogro Parking
1996	Presvac	Tanker Trailer	Metrogro Parking
1980	IME	Tanker Trailer	Pit Area
1980	IME	Tanker Trailer	Pit Area
1980	IME	Tanker Trailer	Pit Area
1980	IME	Tanker Trailer	Pit Area
1980	IME	Tanker Trailer	Pit Area
1980	IME	Tanker Trailer	Pit Area
2010	Brenner	Tanker Trailer	Pit Area

Table 4.1 Metrogro Fleet

Year	Make	Vehicle Type	Storage Location
2022	Brenner	Tanker Trailer	Pit Area
Unknown	Unknown	Nurse Tank	End Use Building
Unknown	Unknown	Nurse Tank	End Use Building
Unknown	Unknown	Nurse Tank	End Use Building
Unknown	Unknown	Nurse Tank	End Use Building

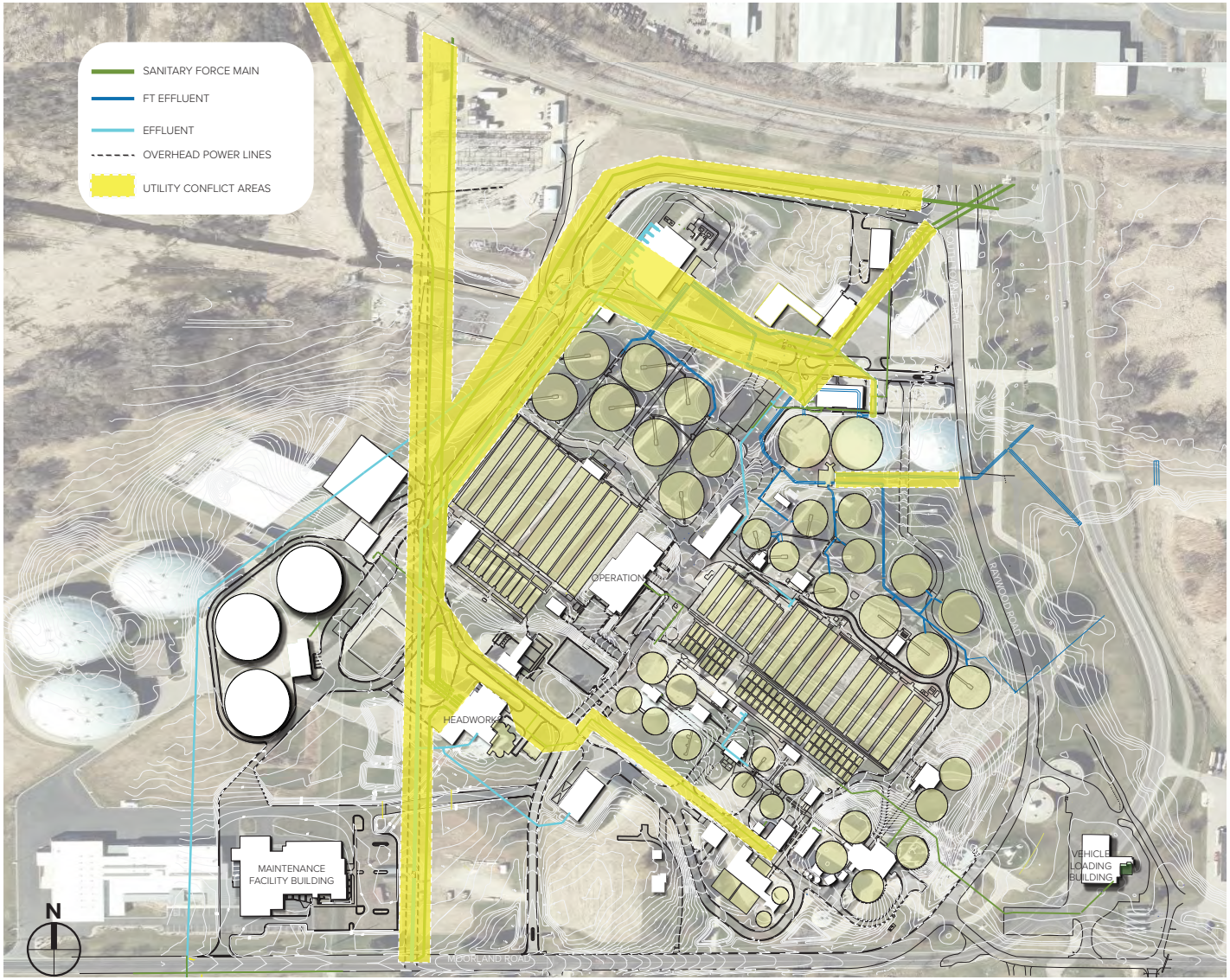

Figure 4.11 Utility Conflicts

Utility Constraints

There are many underground utilities in the Plant, between the process equipment and under paved roadways. Madison Gas and Electric (MG&E) has a substation on the northern boundary of the Plant and an overhead powerline easement runs north/south through the Plant. Underground utilities are co-located within this easement. Untreated water (influent) enters the Plant Headworks building via five (5) force mains. Treated water (effluent) leaves the Plant from the Effluent building via two force mains. The influent and effluent force mains, along with the MG&E easement create “no-build zones,” where buildings and structures are prohibited.

While other local Plant utilities may be relocated, placement of any new building or structure should consider utility locations to reduce Plant operational disruption and costs. Local Plant utilities under the roadways will have additional costs to relocate versus those located within turfed areas. Relocation of utilities may require process outages and/or temporary conveyance.

Access to utilities and easements is required for maintenance and repairs.

THIS PAGE INTENTIONALLY LEFT BLANK

Chapter Five: Building Functionality Assessment

Figure 5.0 *Existing Conditions - Plant Map*

Unlike a traditional physical condition assessment, which identifies condition deficiencies and determines the necessary actions to bring the site, building or infrastructure back to its original condition, a functionality assessment evaluates how well facilities are functioning for an assigned program. For this planning-level effort, the functionality assessment considers the building's design and layout, current support functions, and its ability to accommodate the specific needs of its occupants. This assessment is conducted to identify any issues or deficiencies that may affect the building's overall functionality, safety, and comfort.

There are 54 buildings within the Plant. The Capital Project Infrastructure Placement Plan (CPIPP) focuses on buildings that house staff functions or are included in an identified project in the 2023 Capital Improvement Program (CIP).

- Operations Building (Campus Security, Workplace Improvements)
- Maintenance Facility Building (Workplace Improvements)
- Vehicle Loading Building (Biosolids Improvements)
- Shop One (Workplace Improvements)
- Headworks Building (Septage Receiving)

Chapter Five is organized by building. It provides a description of the building, staffing, function, and floor plans (if available). Each building section concludes with planning considerations.

Operations Building

(DISTRICT BUILDING ID NO. 24)

The Operations Building was constructed during the Plant's Sixth Addition in 1978. Lab space was added in 1993 to the southwest. The building was recently renovated in 2014 and again in 2020. The 2020 renovation included lab renovation and a new breakroom on the first floor along with improved accessibility from the parking lot to the main building entrance. The building is built into the topography with vehicular access on the lower level. This creates accessibility issues from parking areas to main entrance on the first floor.

Operations Building Staff

DEPARTMENT	FTE (2023)	LTE[1], VTE[2], Interns	Projected Staff Increase (10 years)
CED	1		
Communications and Resource	6	1	4-6
Finance and Procurement	6		2
Human Resources	3		1
Planning and Strategy	6	2	1-3
Engineering	12	2	7
IT Services	7	4	2
Ecosystem Services	8		4-6
Lab Services	7	1	
Operations	19	3	4-6
TOTAL	**75**	**13**	**23-31**

1. Limited Term Employee

2. Variable Term Employee

Table 5.0. Operations Building Staff

Building Function

The Operations Building is the core of Plant Operation control. Visitors and guests are directed to this building to check-in, per the District website and by staff. The primary building entrance is on the first floor on the east side of the building, with additional employee entrances on the first floor and the basement.

Building Total Square Footage: 45,539

First Floor Program

- Visitor/Guest check-in
- Lab
- Control room
- M/W Locker rooms
- Meeting room (1)
- General offices (11) (Lab, Operators, Resource Team)
- Workstations (8)
- Storage and support spaces

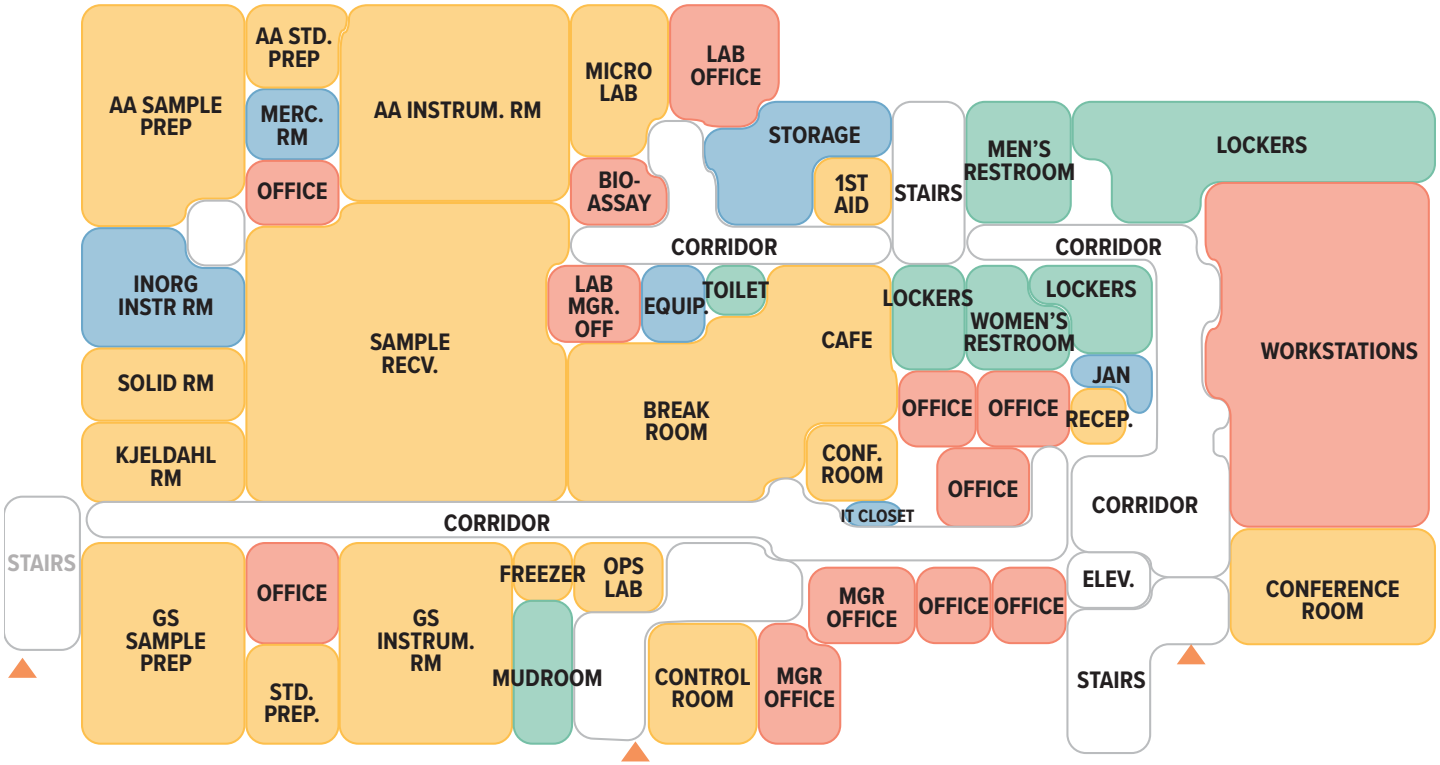

Figure 5.1 Operations Building First Floor

Second Floor Program

- Meeting rooms (2)
- General offices (34)
  - CED, Finance, Human Resources, Planning and Strategy, Engineering, IT
- Workstations (9)
- Storage and support spaces

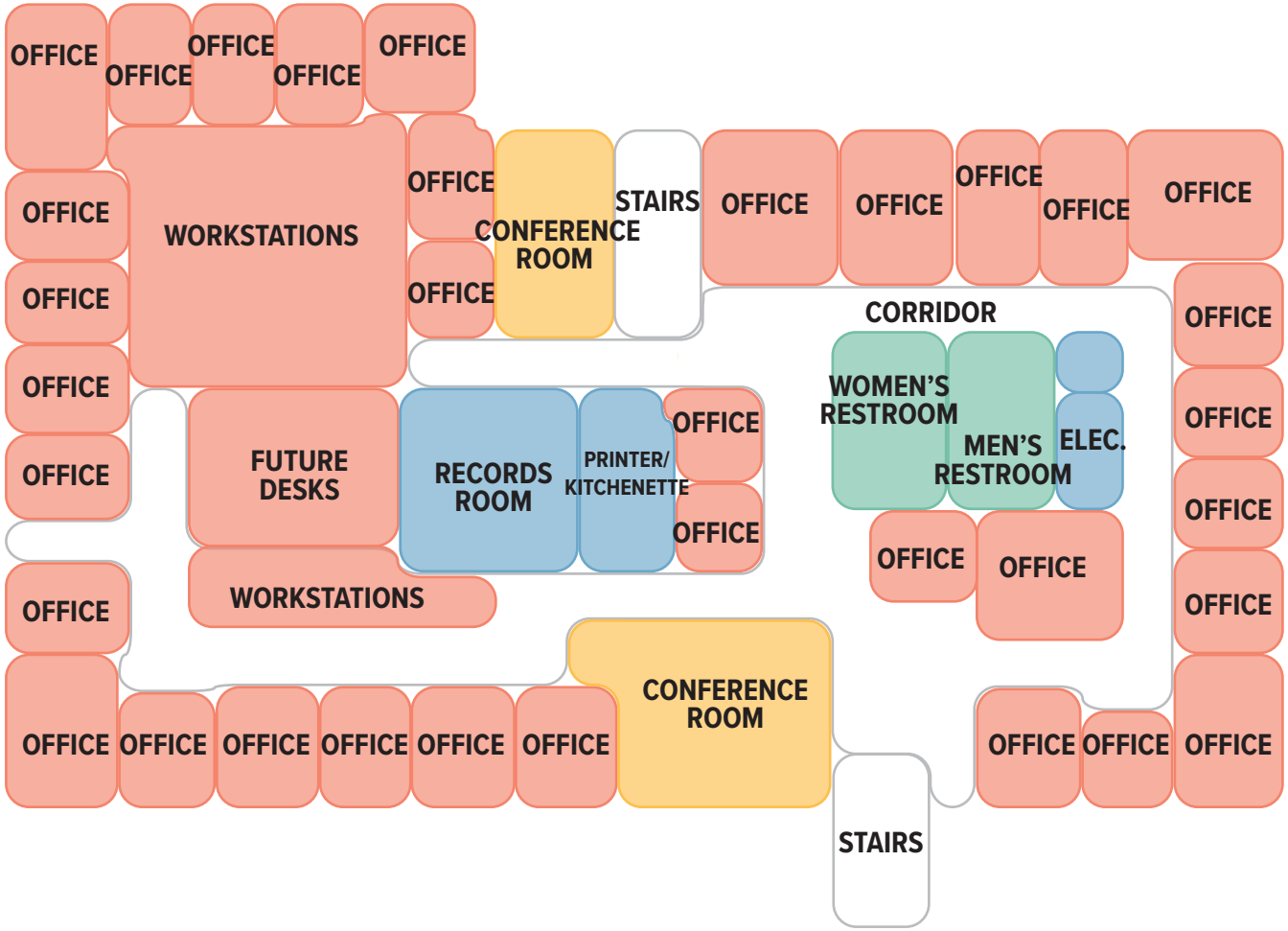

Figure 5.2 Operations Building Second Floor

Lower Floor Program

- IT Server Room
- Mechanical and Electrical rooms
- Work-out room (former recycling room)
- Parking (Bicycle and Fleet vehicles)
- Storage

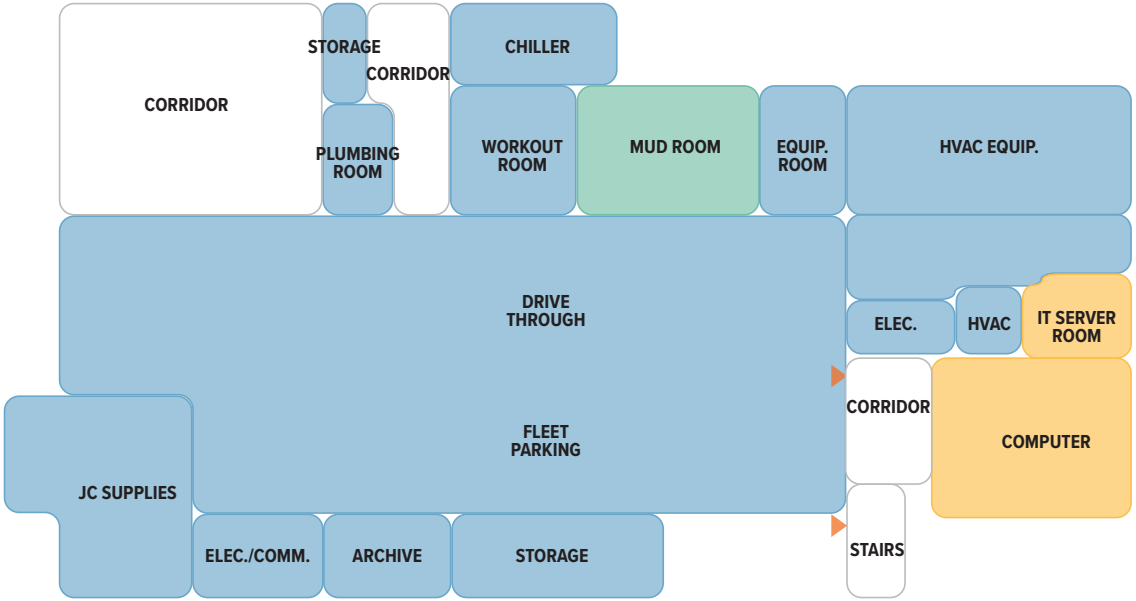

Figure 5.3 *Operations Lower Level*

Operations Building Planning Considerations

Based on communications with District staff, user questionnaires, and site observations, the following items should be considered for workplace improvements:

- Reconfiguration of workspace and/or expansion to accommodate future staff.
  - Further analysis will be needed to determine workspace requirements for those who have the ability to work from home.
  - Multiple workgroups are interspersed with each other on second floor and new hires within second floor workgroups are assigned to spaces on first floor, hindering collaborative work environment.
  - Lab staff and Operators are tied to the Operations Building and each could function separate from other divisions/work groups.
  - District Leadership and Support staff support all district departments. They need to be accessible to all Plant staff, but are not tied to a function at the Operations building.
- Visitor and Delivery Check-in
  - Create a secure visitor and guest check-in located adjacent to predominant visitor and guest activities and along the perimeter of the plant
- Create Wellness space(s)
  - Work-out rooms
  - Mother's or Prayer rooms
  - Privacy (phone) rooms
- Expansion of lab to accommodate larger equipment
- More storage spaces
  - General office, Outreach materials
  - Chemical

Maintenance Facility Building

(DISTRICT BUILDING ID NO. 47)

The Maintenance Facility Building, constructed in 2016, is a LEED (Platinum) certified building. Building staff and functions were relocated here from Shop Building No. 1 (Shop One) and Operations Building.

Maintenance Facility Building Staff

DEPARTMENT	FTE (2023)	Projected Staff Increase (10 years)
Leadership	2	1-2
Reliability Process	5	1
Facilities Maintenance	11	
Mechanical Maintenance	10	1-2
Electrical Maintenance	10	1-2
Collection Systems	6	2
TOTAL	**44**	**6-9**

Table 5.1 Maintenance Facility Building Staff

Building Function

The building serves as the main hub of maintenance functions and deliveries. The meeting/training room is the largest on the Plant campus and hosts Commission meetings. The maintenance vehicle storage bay is the largest interior gathering space and is the primary location of all-staff gatherings.

The main building entrance is on the south side of the building with deliveries arriving at the Loading Dock on the west or the Parts Storage area on the north. The mezzanine is used for parts storage and a workstation was recently added due to limited space on the first floor.

Maintenance staff begin their day at this building where they collect work orders and parts and then move on to collect needed items stored in other parts of the Plant, notably Storage Buildings No. 1 and 2 located in the northeast corner of the Plant. Staff then move to their designated work location either in the building, elsewhere in the Plant, or out in the field.

Square Footage: 50,561

First Floor Program

- Reception area
- Meeting rooms (2): Meeting and Training (Commission meetings are held-here) and a Conference Room
- Maintenance shops: Electrical, Mechanical, Collection Systems, and Buildings and Grounds
- Receiving: parts staging, and storage
- General offices (11)
- Workstations (38)
  - Collections System (8)
  - Parts Staging and Storage (4)
  - Mechanical (11)
  - Electrical (11)
- Facilities Maintenance
- Vehicle Storage
- Storage and support spaces
- M/W Locker rooms

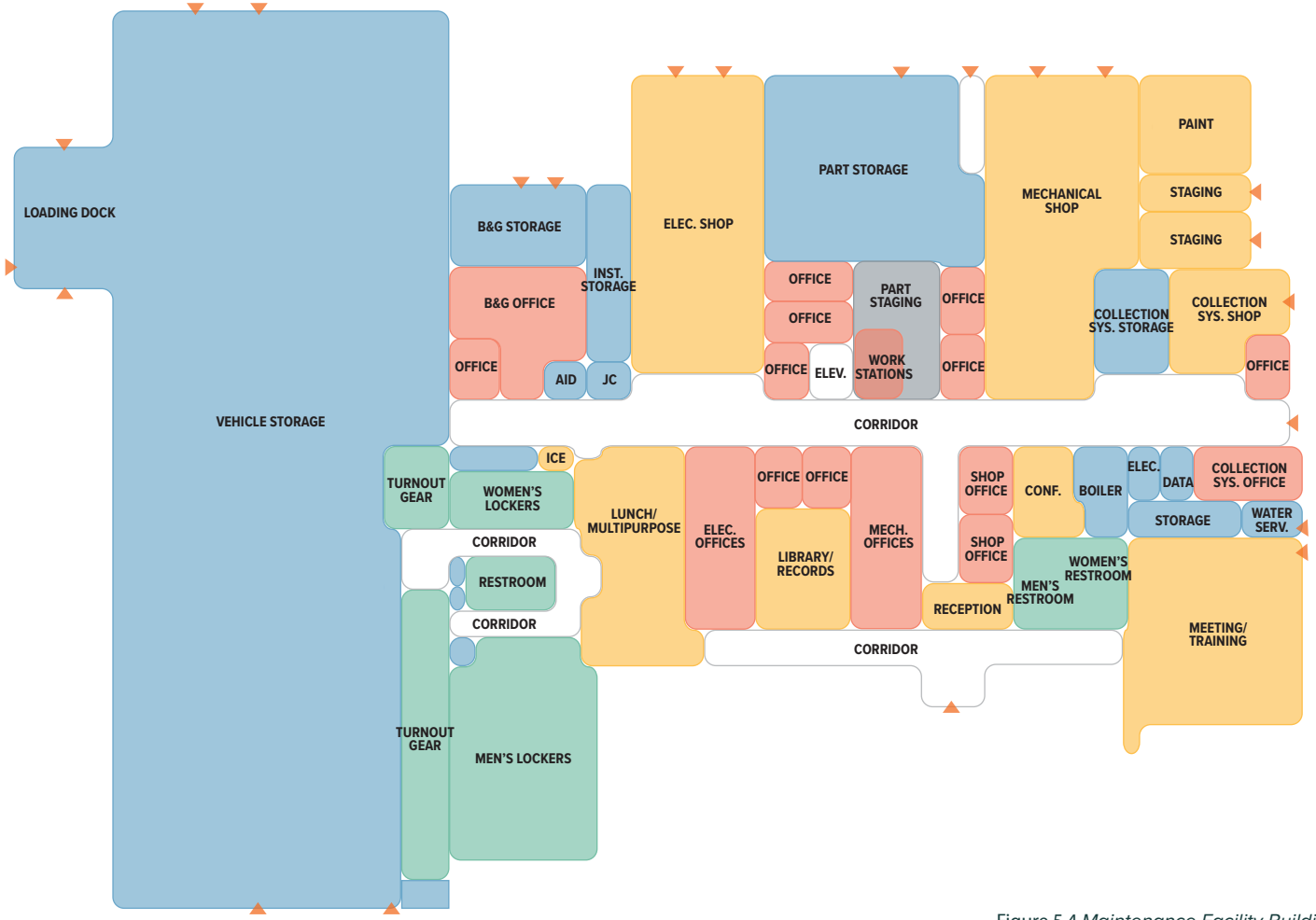

Figure 5.4 *Maintenance Facility Building First Floor*

Mezzanine Program

- Storage
- Workstation (1)

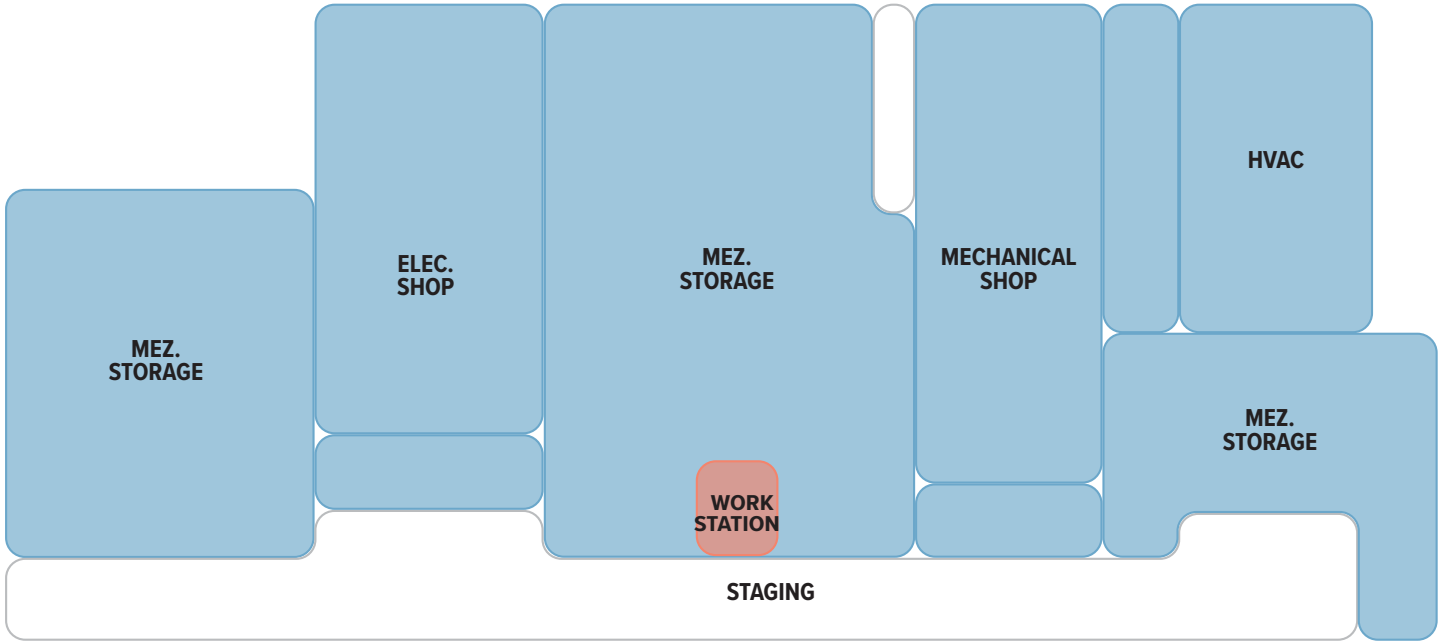

Figure 5.5 *Maintenance Facility Building Mezzanine*

Maintenance Facility Planning Considerations

Based on communications with District staff and User Questionnaires and site observations, the following items should be considered:

- Additional storage space for all work groups
- Vehicular circulation improvements around the building
- Flexible meeting space large enough to accommodate 100+ people (partitions for smaller meeting spaces for increased functionality)
- Additional work/office spaces for staff expansion
- Wellness rooms
  - Mother's Room
  - Privacy (phone call) room
- Relocate Storage Building No. 1 and 2, and Maintenance Shop No. 2 functions adjacent to the Maintenance Facility Building
- Consolidation of all Maintenance functions, including Metrogro staff, in one location

Vehicle Loading Building

(DISTRICT BUILDING ID NO. 39)

The Vehicle Loading Building was constructed during the Sixth Addition in 1979.

Vehicle Loading Building Staff

DEPARTMENT	FTE (2023)	Projected Staff Increase (10 years)
Operations and Maintenance (Metrogro)	4	0
Ecosystem Services	1	0
TOTAL	**5**	**0**

Table 5.2 Vehicle Loading Building Staff

Building Function

The building serves as a loading facility for Metrogro trucks. Metrogro facilitates the application of wastewater treatment biosolid, agricultural fertilizer. The building has two interior loading stations and a separate vehicle maintenance and wash bay. This facility works in conjunction with the exterior Metrogro Pumping Station loading facility on the western side of the Plant. Metrogro fleet is also stored here in the loading bay, wash bay, and exterior parking areas.

Square Footage: 10,595 (includes basement, does not include storage wells)

Building Program

- Metrogro vehicle loading bay
- Maintenance and wash bay
- Offices (3)
- Workstations (2)
- Staff support space

Planning Considerations

Based on communications with District staff and user questionnaires, the following items should be considered*:

- Additional staff office space
- Additional shop space
- Adequate interior space for Oxbo applicators and other equipment to safely maneuver
- Adequate overhead space for maintenance with crane
- Interior storage large enough for Metrogro fleet
- Consolidation of Metrogro locations
- Future site/building space needs if current function is moved

*TKDA staff did not complete a site tour of this building

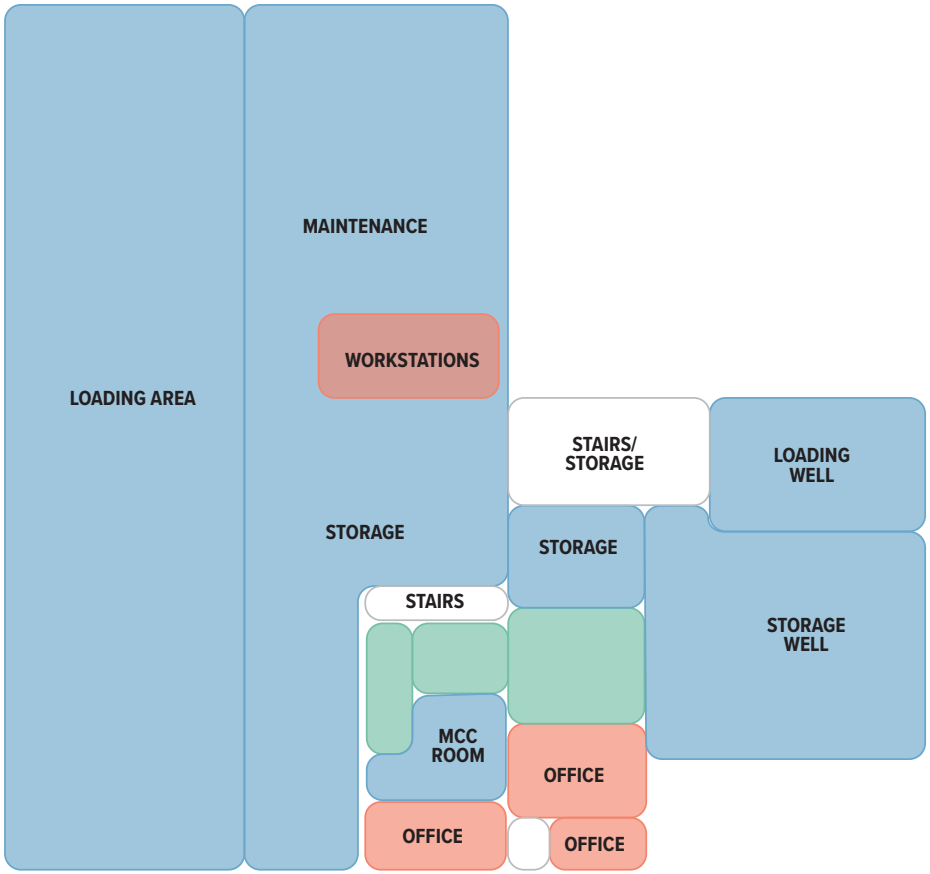

Figure 5.6 Vehicle Loading Building

Maintenance Shop No. 1 — Shop One

(DISTRICT BUILDING ID NO. 37)

Maintenance Shop No. 1 was originally constructed as the Effluent Building in 1958 during plant expansion for Effluent discharge. The building's function was converted to a primary maintenance shop use when the new Effluent Building was constructed in 1983. All maintenance staff formerly located here were relocated to the Maintenance Facility Building in 2016, which provided an opportunity for innovative re-use initiatives for the building, including public education, outreach, and events.

This building does not house any staff.

Building Function

The building serves as the Community Outreach hub, telling the District's story, remembering the history, and increasing public awareness of water stewardship. Plant visitors and tour groups arrive via Gate 2, which is open temporarily for the event, typically by personal vehicle or bus. Groups arriving by bus unload near the primary entrance on the east side of the building. Buses wait in the parking lot near maintenance storage buildings. Visitors and guests arriving by personal vehicle park in the small adjacent parking lot to the east or in the maintenance storage parking area to the north.

Most Plant tours start and end here. Group functions and tour orientation take place in the large gathering room.

First Floor Program

- Large gathering room
- Workshop
- Storage
- Support spaces

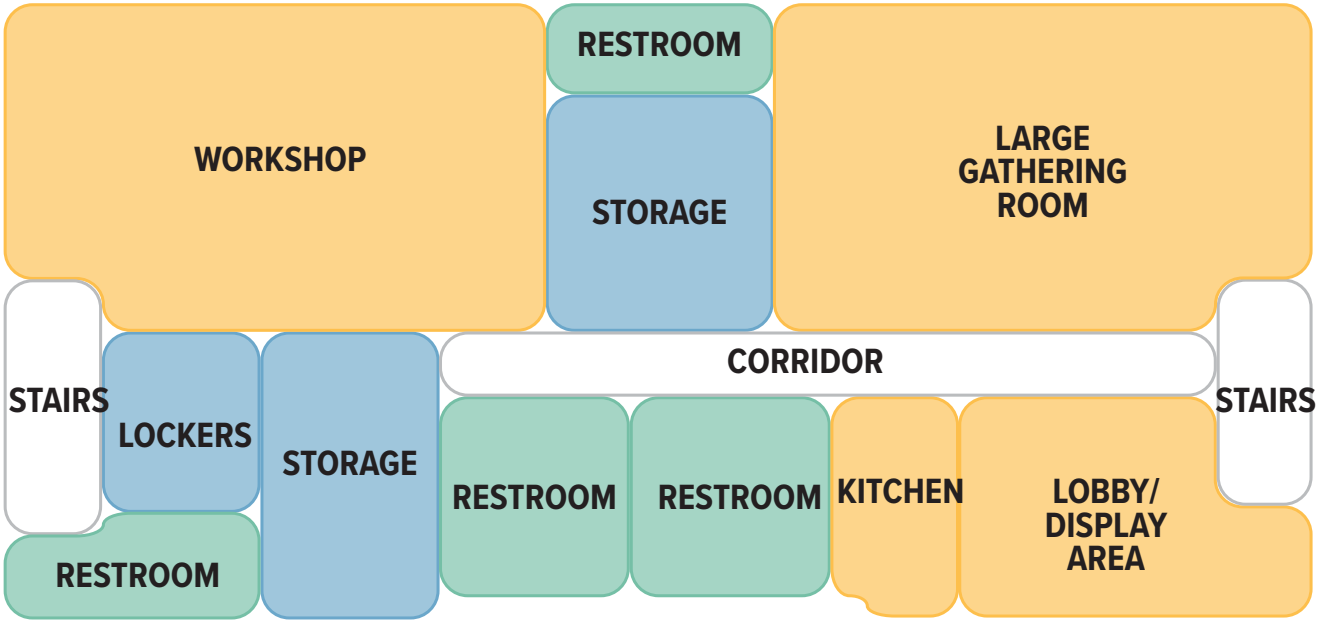

Figure 5.7 Shop One First Floor

Second Floor Program

- Large gathering room
- Workshop
- Storage
- Support spaces

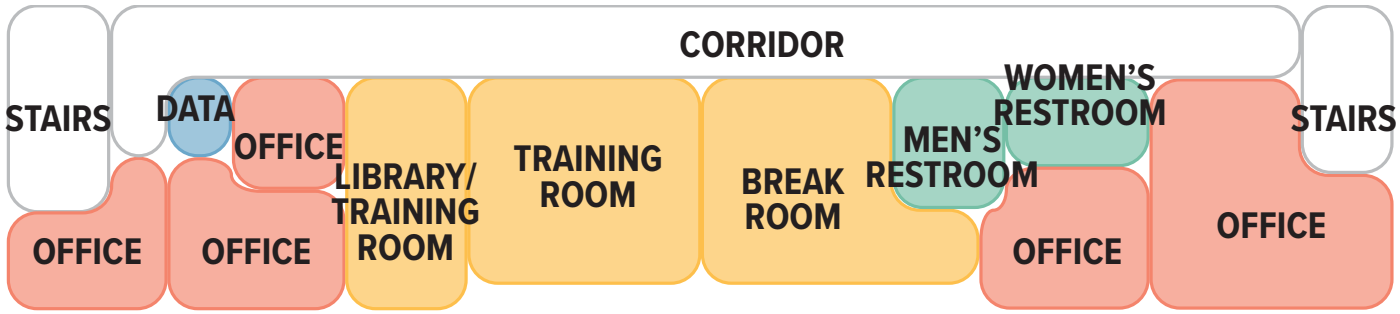

Figure 5.8 Shop One Second Floor

Shop One Planning Considerations

Based on communications with District staff and Shop One Strategic Plan, the following items should be considered:

- Co-locate functions of Shop One with staffed functions
- Either in current location or in new location adjacent to staff that oversee the current programmatic functions
- Improve entrance security and visitor check-in
- Additional renovation for workspace, exhibits and displays
- Accessible access to second floor for re-use

Headworks (District Building ID No. 2)

The Headworks building was constructed during the tenth addition in 2006. It is the first line of treatment for wastewater entering the Plant. It is also the location for septage haulers to unload sewage collected from septic tanks and portable toilets.

Current Space Functionality

The interior space of the building contains screens and chambers to remove trash, sand, and gravel. On the exterior is a septage receiving area. This is a covered area large enough for two (2) septage hauler trucks to back in and unload via a hose from the truck to a receiving trough. The septage in the trough is piped into the building via gravity and joins the influent for treatment. The haulers provide septage samples, which are left in a refrigerator within the building. Haulers wash down their trucks and the septage area when complete.

Planning Considerations

Based on communications with District staff and septage haulers, the following items should be considered:

- Provide additional stalls for septage receiving drive-through configuration is preferred
- Create an interior receiving area to mitigate winter icing issues
- Improve screening for septage before entering influent channels
- Provide volume metering

General Plant Storage

Maintenance Storage

Storage of various facilities maintenance items occurs in Storage Buildings No. 1 and 2, Maintenance Shop No. 1 (Shop One), Maintenance Shop No. 2 and the Service Building. These storage and maintenance buildings are in the northeast corner of the Plant. When the Maintenance Facility Building opened, maintenance staff relocated from Shop One to that facility, creating two separate maintenance facility areas.

Chemical Storage

Storage of various chemicals used in wastewater treatment occurs where they are used. The Plant does not have a centralized designated chemical storage facility.

Planning Considerations

Based on communications with District staff and site observations, the following items should be considered:

- Receive and store chemicals in one centralized location for distribution to use areas
- Chemical storage facility to be located in proximity to existing storage areas - south side of the Plant central to Biosolids End Use Building and Struvite Harvesting Building

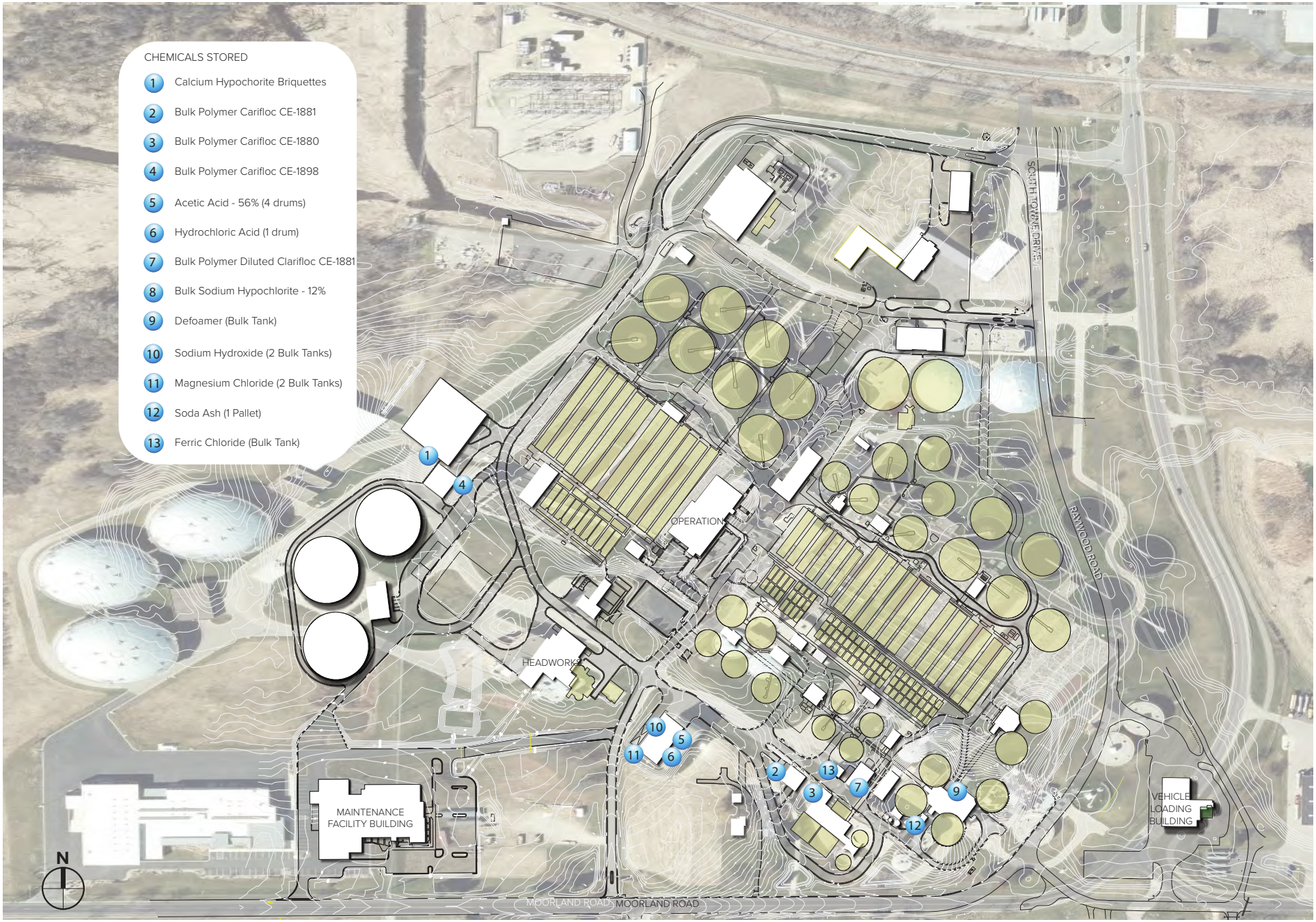

Figure 5.9 Chemical Storage Locations

Chapter Six: Program and Placement Considerations

This chapter provides a description of the ten (10) identified Capital Project Infrastructure Placement projects or site considerations.

Each project or site consideration is organized by:

- CPIPP Number and Title
- Previous Plan References
- Alignment with Strategic Performance Areas
- Project or Facility Program
- Placement Considerations
- Project Benefits
- Cost (if provided)

CPIPP 1.0 Electrical Service Upgrade and Backup Generators

PLAN REFERENCE: 2023 CIP (Capital Improvement Program), 2020 Energy Management Master Plan

This project replaces the outdoor service switchgear, transformers, busway system and indoor distribution switchgear for the incoming electrical service to the treatment plant and adds backup generators.

Strategic Performance Areas

- Infrastructure Reliability

Infrastructure Program

- Three new generators, with a potential future fourth generator (this is currently in design by Madison Gas & Electric and is subject to change)
- New switchgear
- New bus-way between Nine Springs Substation and H1 substation

Placement Considerations

- Located between the Effluent Building and MG&E Nine Springs Substation
- Keep substation access outside of primary controlled Plant perimeter fencing

Benefits

- Replaces and upgrades equipment coming to the end of its useful life.
- The addition of backup generators increases operational reliability.

Cost

- $4,739,000 (per 2023 CIP)
- *$12,101,250 (per 2024 CIP)*

Figure 6.0. Electrical Service Upgrade Location

CPIPP 2.0 Biosolids Improvements

PLAN REFERENCE: 2023 CIP, 2021 Biosolids Management Plan, 2020 Energy Management Master Plan

The operation of the Nine Springs Wastewater Treatment plant leaves significant quantities of biosolids as a byproduct. Biosolids must be disposed of in an environmentally-responsible way, while also operationally manageable and cost-effective. The District currently disposes of most biosolids in the form of class B liquid (Metrogro), applied to more than 5,000 acres of local farm fields in compliance with Department of Natural Resources regulations. This method recovers the resources in biosolids through their use as fertilizer.

The District has disposed of its biosolids through land application for many years. A 2021 Biosolids Management Plan report reviewed the program to identify needs and opportunities. The report framed its analysis around the question of what form of biosolids the District should produce. With consideration of other district priorities and no regulatory drivers, Class B liquid—the District's current product—is therefore the pathway for District biosolids for the near future.

This plan provides infrastructure placement considerations for upgrades to the existing Class B liquid product but identifies Plant area to be reserved for future considerations if a change to a cake product were to be pursued. Future space allocation considerations will defer to that alternative with the highest space need requirements. If a change is made to a cake product, the existing Metrogro storage tanks and vehicle load-out stations are no longer needed.

The report identified the following issues with equipment and infrastructure implications:

- Fleet management - Applicator and trailer limitations with current fleet size for field delivery and land application. Currently, the District's limitation is applying on 4 sites maximum due to staffing and equipment limitations.
- Inadequate and inefficient "Load out" operations - Not enough trailer loading stations, sludge transfer inefficiencies to second loading location (Vehicle Loading Building), non-standard fleet trailers and loading set ups, sludge loading piping and pump operational inefficiencies.
- Inadequate maintenance shop area - The current size of equipment and building size limitations do not allow for safe working conditions within the building and competing operations for space during hauling for emergency repair of equipment in shop.
- Inadequate fleet storage protection - Equipment stored outside and uncovered in multiple district locations (end use building, parking lots at VLB, pit property). Additionally, during cold weather hauling, trailers are parked in the maintenance facility garage over night to prevent valve and material freezing.
- Inefficient building systems due to heated loading bay, yet manual doors are left open all day. See 2020 Energy Management Master Plan, Simple Alternatives to reduce energy consumption.

Strategic Performance Areas

- Adaptation
- Financial Sustainability
- Regulatory Compliance
- Workforce Development

2.1 Metrogro Load-out Improvements

Abandon load-out in the Vehicle Loading Building and consolidate from two (2) vehicle loading locations within the Plant to one location at the existing Metrogro Pumping Station to the east of Metrogro Storage Tank No.1.

Facility Program

- Expand the existing Metrogro Load-Out Station from two (2) loading stations to six (6).

Placement Considerations

- Expand at the existing load-out station location near the Metrogro Storage Tanks.
- Relocate Odor Control Soil Beds.
- Realign service roads 'A' and 'AB' to accommodate Metrogro hauling traffic.
- Metrogro haulers use Gate 1 for entry and exit.
- Establish a secondary perimeter of security to allow Metrogro haulers unimpeded access during operating hours.

Cost

- $5,700,000

Figure 6.1. Biosolids Vehicle Load Out

2.2 Metrogro Storage and Maintenance Facility

Relocate Metrogro operations from Vehicle Loading Building and consolidate Metrogro fleet storage and maintenance in one facility. Co-locate Fleet maintenance (Maintenance Shop No. 2) with Metrogro maintenance.

Facility Program

- Area: 23,500 GSF
- Footprint: 105’ x 130’
- Fleet Storage
- Wash Bay
- Maintenance Bays (4)
  - Metrogro maintenance: provide clearance for crane above applicator equipment
- Offices (5): Supervisor (1), staff (4)
- Workstations
- Machine Room
- Support spaces:
  - Break room
  - Restrooms
  - General Storage Room
  - Oil Storage Room

Placement Considerations

Consolidate all Metrogro functions to the area adjacent to the existing Metrogro Storage Tanks and the Load-out Station to increase operational efficiency. There are two options for location of the facility.

OPTION A

- Located to the north of the Maintenance Facility Building.
- Utilizes slope for a potential 2-story structure.
- Fleet maintenance on the south side of the building shares the service road with the Maintenance Facility Building.
- Shared fueling station with Maintenance Facility Building.
- Metrogro equipment accesses the facility on the north side and is adjacent to the load-out stations and Pump Station.
- Offices located within the building provide direct observation of the load-out stations.

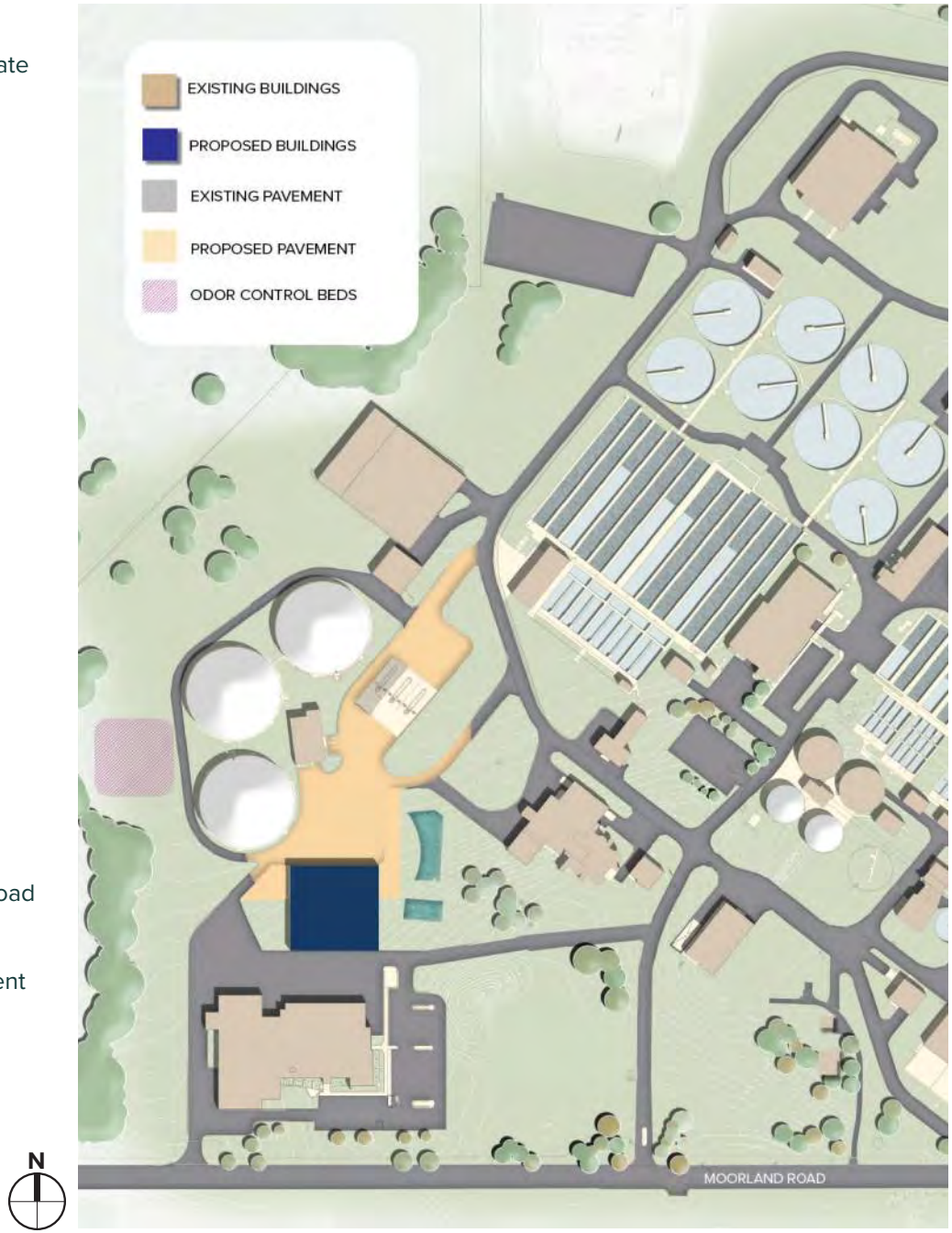

Figure 6.2. *Biosolids Metrogro*

OPTION B

- Located to the west of the Maintenance Facility Building and south of the Metrogro Storage Tanks.
- Extension of the service road to the west is required.
- Fleet maintenance occurs on the south side of the facility adjacent to Fleet storage in the Maintenance Facility Building.
- Service road 'AC' is reconfigured to accommodate new facility.
- Additional Metrogro fleet storage space is available to the west.

Future Placement Considerations

- Future Biosolids expansion reserved for 5-10 acres to the west of current storage tanks.

Benefits

- Concentration of staff and function to reduce trips within the Plant
- Improved function oversight
- Reduced vehicular conflicts within Plant
- Covered/tempered equipment storage designed for equipment maneuvering protects applicator equipment from damage/freezing temperatures and improves reliability
- Improved maintenance area for equipment improves staff safety

Cost (Option A or B)

- $12,740,000-14,000,000

Figure 6.3. *Biosolids Metrogro*

Figure 6.4. *Biosolids Expansion*

CPIPP 3.0 Septage Receiving Improvements

PLAN REFERENCE: 2023 CIP, 2016 Liquid Processing Facilities Plan Table ES.04-1

Constructed as part of the tenth addition, the Headworks facility continues to experience numerous operational and maintenance issues related to the acceptance of septage and other hauled wastes. Hauled waste receiving needs upgrades due to high maintenance costs, continued operator attention, and the potential for increased revenue with expanded unloading stations.

Strategic Performance Areas

- Financial Sustainability
- Infrastructure Reliability
- Public Trust

Facility Program

Construct a new stand-alone Septage Receiving facility separate from the Headworks building to include up to four (4) volume metered, drive-through unloading stations.

- Area: 2,880 GSF
- Footprint: 48’ x 60’
- Expand from two (2) to three (3) unloading stations, could expand to four (4) if space is available.
- Add volume metering.
- Covered, drive-through mechanical unloading stations.
- Support Functions: Sample drop-off and restrooms.

Placement Consideration

It is recommended to locate the Septage Receiving facility upstream, but in proximity to the Headworks building. Gravity flow to Headworks is preferred, but Septage could be piped via forcemain. Septage hauler traffic should be located outside the primary Plant security fence for unimpeded access during operating hours and to keep haulers outside of the primary Plant process area.

OPTION A

- Situated between the Headworks building and Metrogro storage tanks.
- Shares access with Metrogro Haulers via Gate 1.
- Reconfigure roadways to allow for drive-through unloading.

Figure 6.5. Septage Receiving A

OPTION B

- Situated to the east of the Maintenance Facility Building.
- Haulers enter the Plant through an improved Gate 3 on Moorland Road and immediately turn right into the Septage Receiving Facility. Haulers can drive through and either exit via Gate 3 or exit via a dedicated exit on Moorland Road.

Benefits

- Reduced maintenance
- Operator oversight efficiencies
- Increase revenue by tracking discharge volumes and loadings more accurately
- Stand-alone facility would not interrupt current Septage Receiving operations
- Allows for future expansion into a High-Strength Waste (HSW) or fat, oil, and grease (FOG) facility

Cost (Option A or B)

- $4,010,000-5,000,000

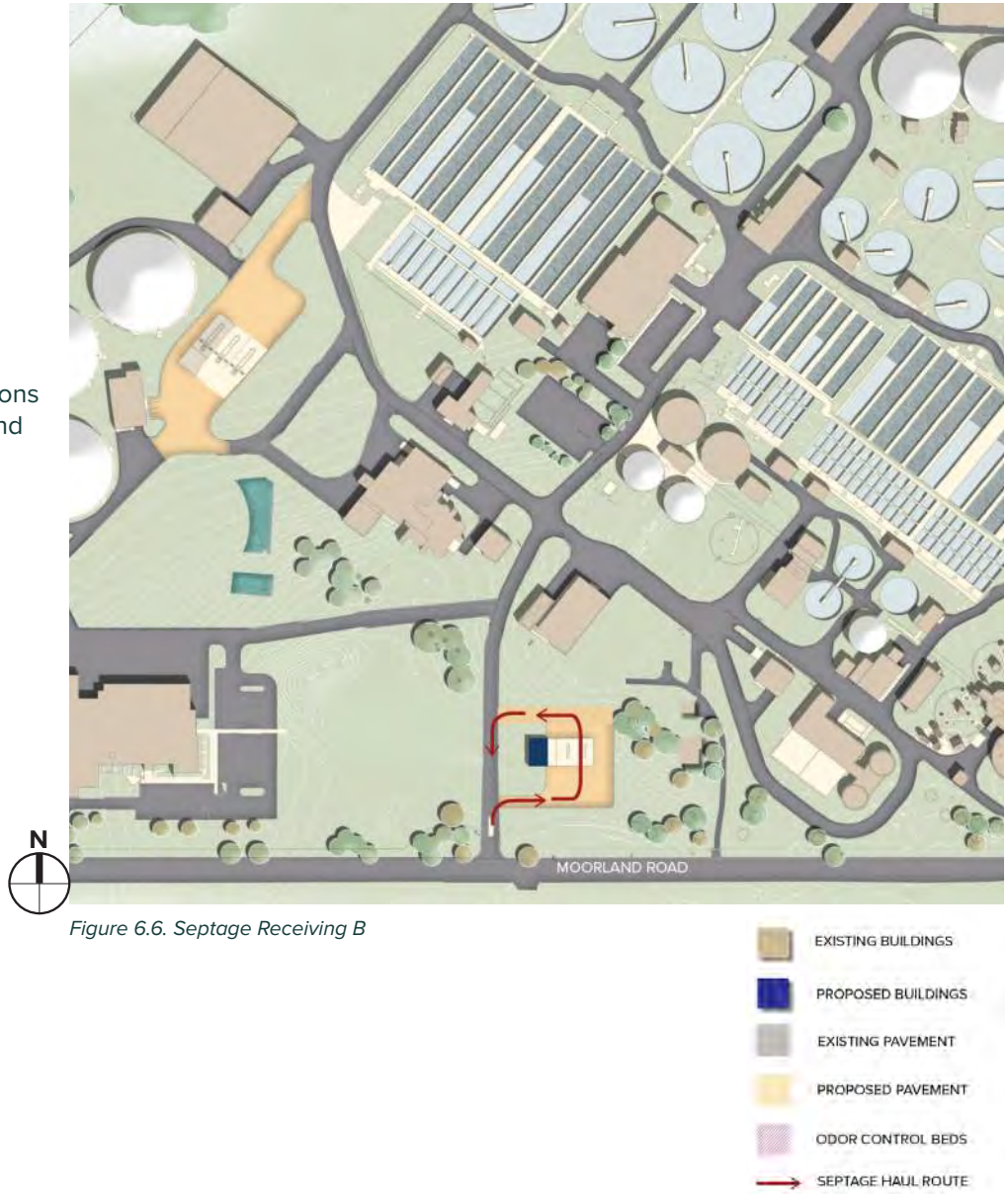

Figure 6.6. Septage Receiving B

CPIPP 4.0 Heat and Power Improvements

PLAN REFERENCE: 2023 CIP, 2021 Biosolids Management Plan, 2020 Energy Master Plan

Potential power improvements include either cogeneration or biogas pipeline injection. A determination on the best path forward for the District requires additional study. This plan provides infrastructure placement considerations for both options.

Strategic Performance Areas

- Adaptation
- Financial Sustainability
- Infrastructure Reliability

Program and Placement Considerations

- Program not defined due to additional study needed.
- Cogeneration may need 6,600 SF or the equivalent of the current Gas Skid and Sludge Control Building No. 2 footprint (120' x 55').
- Biogas injection program to-be-determined.
- Cogeneration improvements should be located near existing power generation facilities (Sludge control and Boiler buildings) and in conjunction with heat loop improvements.
- Biogas injection infrastructure does not have identified placement constraints. Based on existing treatment plant infrastructure, preferred locations are either on the east side of plant near solids processing or to the south of the MG&E (Madison Gas and Electric) substation.
- Biogas injection will require a gas pipeline connection to gas utility provider services.

Benefits

- Increase infrastructure reliability

Cost

- $50,910,000 (per 2023 CIP)

Figure 6.7 *Heat and Power Improvements*

CPIPP 5.0 Liquid Processing Phase 2

PLAN REFERENCE: 2016 Liquid Processing Facilities Plan –Table ES 04-1

Improvements to the liquid processing equipment for variable oxygen level delivery and treatment (low DO). Replacing existing east and west blowers, and electrical switchgears. There may be a need to expand the West Blower Building to accommodate new blower equipment.

Strategic Performance Areas

- Infrastructure Reliability

Program and Placement Considerations

- Potential expansion has not been studied for size requirements or determination of need.
- Reserve space directly adjacent to West Blower Building for expansion.

Benefits

- Increase infrastructure reliability
- Reduce energy demand

Cost

- $43,900,000 (per CIP 2024)
  - EPIC-$1.3M
  - Low DO Partial Plant-$3.6M
  - Low DO Full Plant-$19M
  - West Blowers & SG - $10M
  - East Blowers & SG - $10M

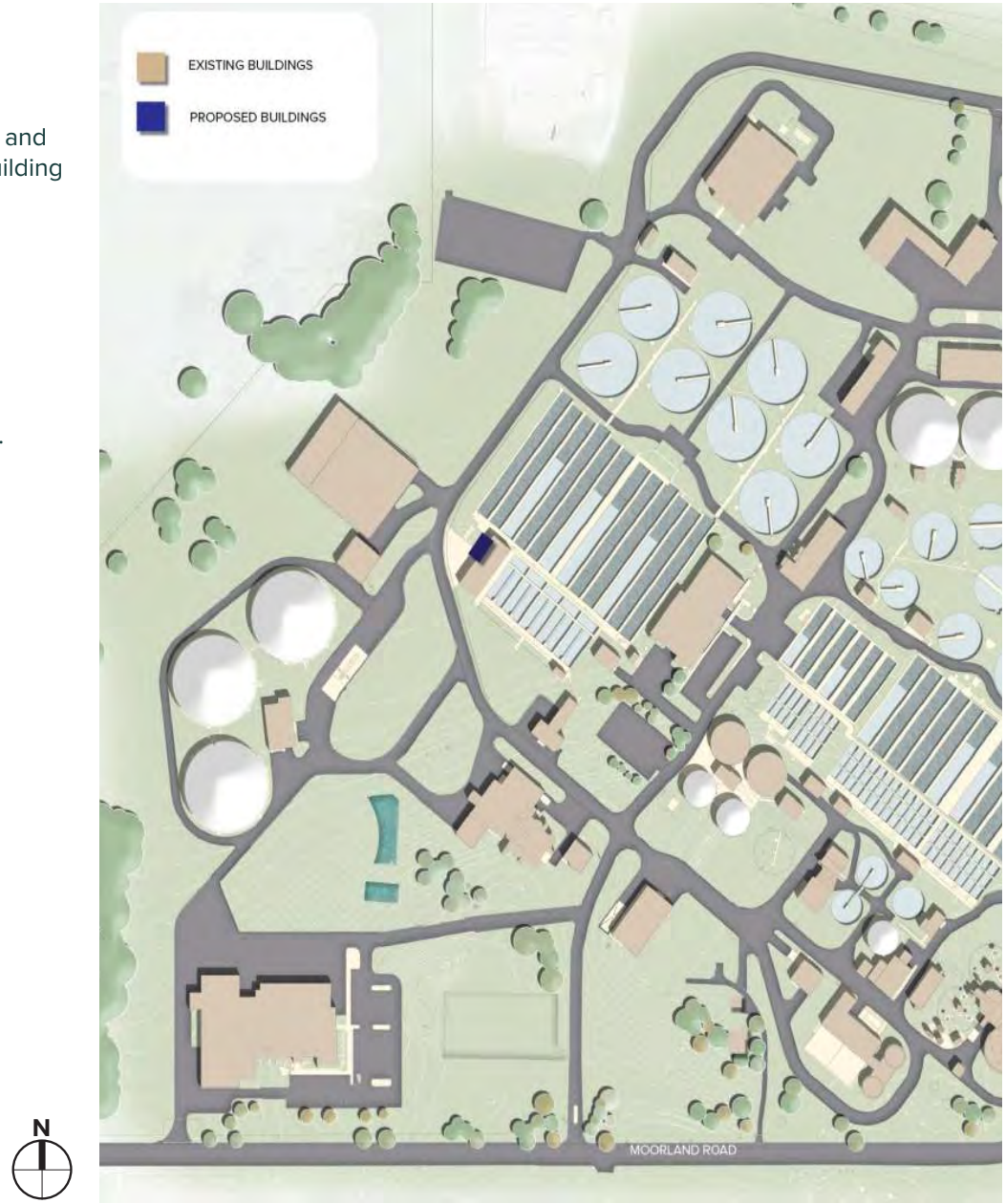

Figure 6.8. *Liquid Processing*

CPIPP 6.0 Campus Security/Safety Improvements

PLAN REFERENCE: 2019 Department of Homeland Security, Infrastructure Survey Security & Resilience Report

Currently, there are no measures to control or limit access to the Plant during normal operating hours. The Plant property is fenced and gated at the five entrances, with two of the gates left open during operating hours allowing free access to the Plant. It is advised to control access to only those personnel with a valid purpose or function on-site. This may have an impact on the location of staff functions that greet and check-in visitors, locations for sample drop-off, or for those who interact with visiting or volunteer personnel on a frequent basis. This also impacts overall Plant public image, with a clear delineation of public vs. Plant-specific functions. Once security improvements identify primary and secondary access control points, site circulation improvements should be done to separate modes of traffic and reduce internal Plant circulation conflicts.

Strategic Performance Areas

- Infrastructure Reliability
- Public Trust
- Workforce Development

CPIPP 6.1 Access Control/Adminstrative Building

Facility for public reception and control measures for primary and secondary entrances to increase the District's Protective Measure Index score for physical security as assessed by the Department of Homeland Security. Due to the limited expansion potential of the current Operations building, it is recommended to relocate existing functions to a new Administration Building to allow space for core Operations function expansion.

Facility Program

Main reception of visitors and public point of entry. Houses public functions such as education and interpretation, meetings, and events.

- Area: 30,800 GSF
- Footprint: 140' x 160' (@ max size)
- Staff functions: Could include, CED, Communications and Resource Team, Finance, HR, Ecosystems Services
  - Staff FTE: 18 - 30
- Offices
  - CED office (1)
  - Director's office (1)
  - Manager's offices (3)
  - Supervisor's office
  - Standard offices (14)
  - Future offices (8-10)

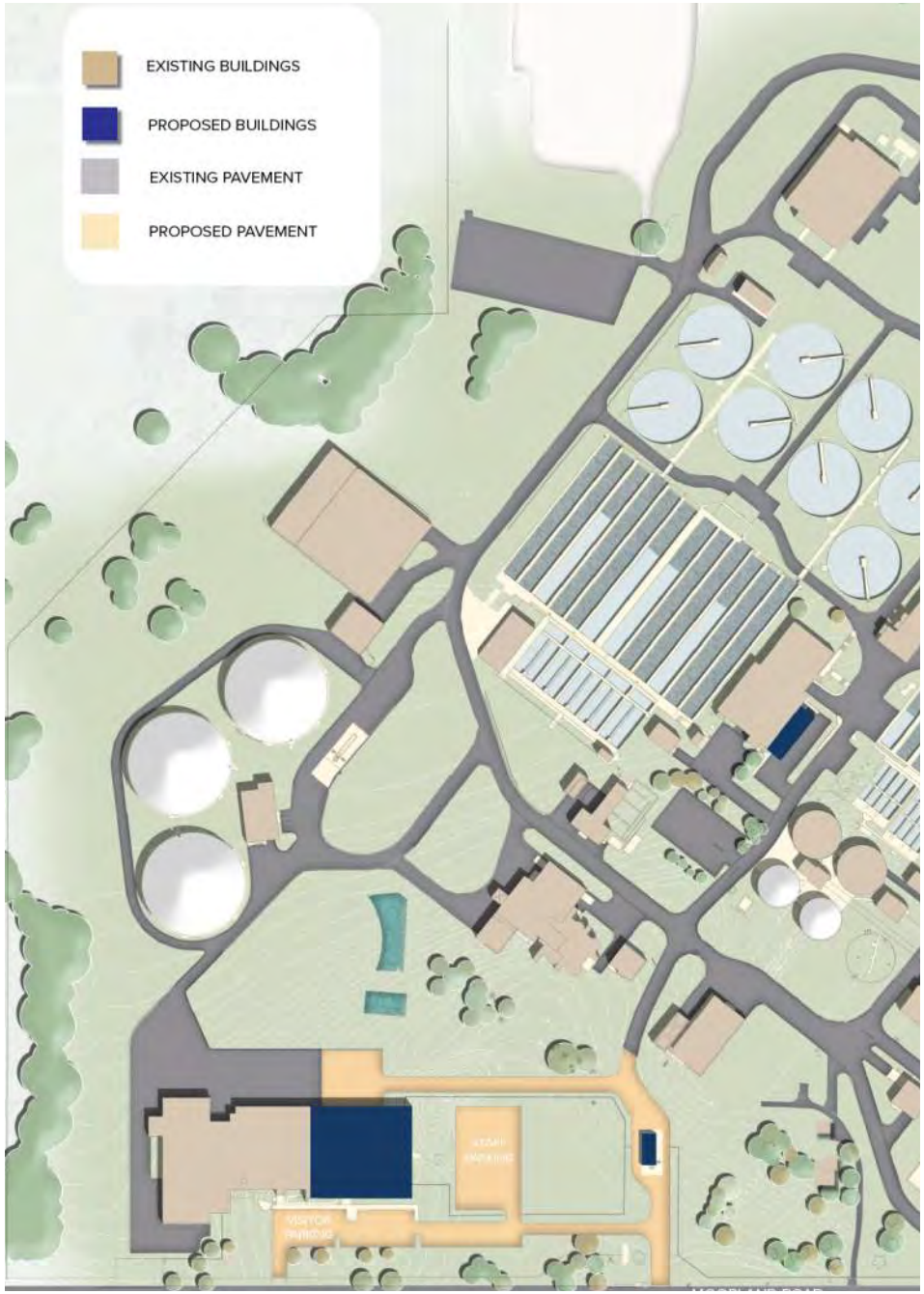

Figure 6.9. *Campus Security & Admin*

- Meeting Rooms
  - Executive conference room
  - Commission room
    - Programmed for (9 commissioners + staff + audience members)
    - Upgraded IT and A/V equipment
    - Locate for flexible use by staff for other District meetings
  - All-staff meeting room (conversion of smaller meeting spaces to one large space)
  - Public Education and Tour Gathering
- Interpretive exhibit space
  - Gathering space to start and end tours for groups up to 120
  - Consider stacked functionality to accommodate an all-staff meeting
- Support Space
  - Toilet rooms
  - Employee break room with kitchenette
  - Wellness room
- Storage
  - Library and archive storage (from Shop One)
  - Records storage
  - Program storage
  - Marketing storage
- General (Resource Team)
- Controlled Plant Access Gate
  - Security building, 8' x 10'

Placement Considerations

- It is recommended to create a Plant 'Hub' by expanding the Maintenance Facility building to the west for administrative functions.
- This creates a visible public entry due to its location along the Plant's perimeter near Moorland Road.
- Realign Gate 3 entrance to the east to align with neighborhood street and create a primary entry into the Plant for visitors, employees, and deliveries.
- Visitor parking is located to the south of the building along Moorland Road, outside of a controlled perimeter fence.
- Employees and deliveries enter the Plant through a controlled access gate.
- Access Control/Fencing
  - A Primary perimeter fence will encompass primary Plant functions and establish around-the-clock controlled gate access.
  - A Secondary perimeter fence allows Metrogro and Septage Hauler access to their facilities without gate control during operating hours. Employee parking could also be within a secondary perimeter fence to reduce traffic flow through controlled access points.
  - Remove residential home to reduce Plant liability and reserve for future Plant functions.

Cost

- $19,400,000-22,500,000 (assume LEED certification)

CPIPP 6.2 Site Circulation

Improve internal Plant circulation routes to mitigate conflict areas and provide separate facilities for pedestrians and bicyclists where appropriate. This may be done with CPIPP 6.1 or with other CPIPP projects needing circulation improvements or changes.

- Pedestrian and bicycle
  - Separate pedestrian and bicycle circulation from vehicular in areas of high traffic
  - Connect to the Capital City Trail
  - Connect to the bus stop On Moorland Road
  - Reduce need to cross Raywood Road or Moorland Road to service Plant functions
  - Reduce internal Plant vehicular circulation. Free up roadways for pedestrians and bicyclists
  - Promote walking by locating staff functions near each other
- Vehicular
  - In conjunction with CPIPP 2.0 and 3.0, modify heavy vehicle circulation routes to reduce overall conflicts and remove blind spots
    - Control delivery access – See CPIPP 6.1
    - Increase roadway width to a minimum of 12' drive lanes on heavy truck routes, such as Metrogro and Septage receiving haul routes
    - Improve internal intersections for safe passage and improve visibility
- Wayfinding
  - Name internal Plant streets and install street signs
  - Add wayfinding signage at intersections, parking lots, and all publicly accessed facilities

Cost

- $460,000 - 600,000

Benefits

  - Protect Plant assets
  - Protect the public and staff

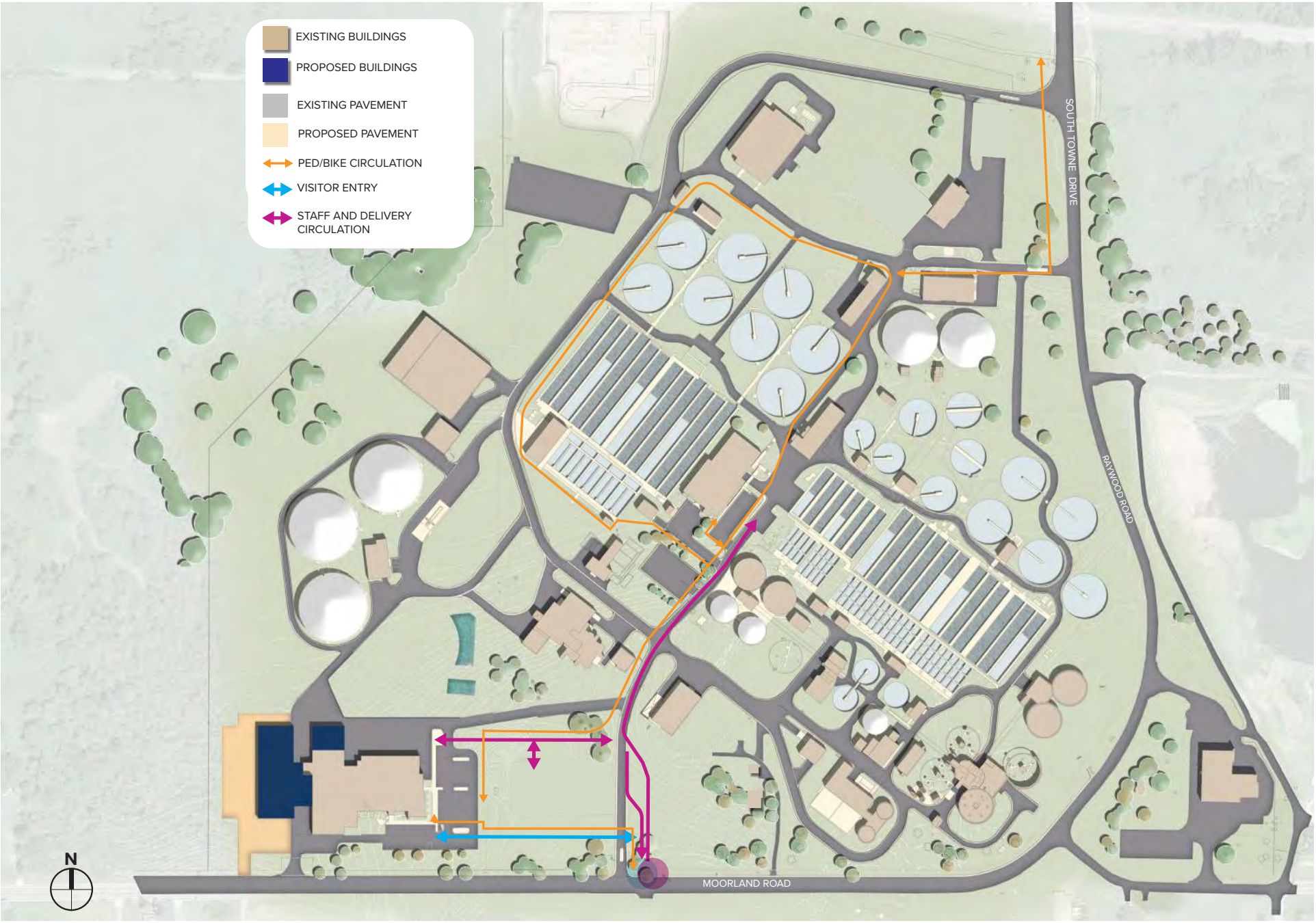

Figure 6.10. *Site Circulation*

CPIPP 7.0 General Workplace Improvements

The workspace for maintenance staff was expanded and improved when the Maintenance Facility Building opened in 2016. Staff workspaces have recently been added to the parts storage area and the central mezzanine storage area. Staff expansion is limited.

A portion of the first floor of the Operations Building was renovated in 2020, yet there is demand for space for new staff, particularly flexible space for interns, variable employees (seasonal), and those that may choose to work hybrid. Both the Operations and Maintenance Facility Buildings lack employee support facilities such as wellness and privacy spaces, and an appropriate work-out space. Both buildings need upgraded meeting spaces (A/V technology), particularly one large enough to host all-plant meetings. Storage space is disjointed and limited in the Operations building and is at capacity in the Maintenance Facility building.

Strategic Performance Areas

- Adaptation
- Workforce Development

CPIPP 7.1 Operations Building

With the relocation of certain work groups to a new Administrative Building (CPIPP 6.1), this creates an opportunity to renovate the second floor of the Operations Building for remaining staff, and consideration of space for a lab expansion on the first floor.

Facility Program

- Administrative/Business services functions relocated to new Administrative Building–see CPIPP 6.1
- Projected future additional staff in remaining work groups: 5-11 FTE (Full-time Equivalent)
- Lab expansion (future)
  - Lab expansion (excluding offices) will require either building expansion to the south or east or an expansion into the existing break room.
  - Expansion of Lab office or personnel space could be accommodated on either the north side of the first floor or on the second floor as other staff functions are relocated.
- Privacy and wellness spaces
  - Provide at a minimum 1 privacy/phone room on the second floor for those that do not have a private office
  - Workout room: locate next to locker rooms on first floor
  - Wellness/mother's room: provide 1 per floor
- Storage areas
  - Remove various closets and consolidate storage on second floor
  - Recapture space currently used for workout room on lower level as storage.
  - Secure chemical storage for lab
- Additional lockers/showers: not required if a portion of staffing is relocated

Cost

- $8,720,000 - $10,000,000

CPIPP 7.2 Maintenance Facility Building

Renovation and expansion to accommodate functions currently housed in Storage Buildings No.1 and 2, and Maintenance Shop No. 2. Relocation of inventory functions to allow for staff expansion and expand parts storage and staging areas.

Facility Program

- Expanded staff workspace
  - 450 SF to accommodate 3-7 new staff
  - Relocate Inventory functions (parts storage, staging, and offices) to a new receiving and warehouse facility next to the Maintenance Facility.
  - Relocation of parts storage and staging allows existing space to be renovated for additional staff work areas.
- Storage and Receiving Expansion: Consolidation and centralization of maintenance inventory and equipment in one location.
  - Area: 19,000 GSF
  - Footprint: 160' x 200' (max.)
  - Upgrade the loading dock area
  - Offices (4)
  - Restrooms
  - Consolidate the following storage areas
    - Storage Building No.1
    - Storage Building No.2
    - Tool and Equipment storage and staging
    - Parts receiving, storage, and staging
  - General warehouse storage for Plant supplies (janitorial, office)
  - Chemical and hazardous materials storage
  - Program specific vehicle storage (forklift, pallet trucks, plant delivery vehicles, etc.)
  - Secured storage for critical inventory
- Fleet Storage Expansion
  - Expand interior fleet storage to the north of existing fleet storage
  - Expand area for exterior fleet parking
  - Expand green infrastructure for electric fleet vehicles

Cost

- $9,330,000 - $10,300,000

Benefits

- Increase employee satisfaction and wellness
- Adapt to changing workforce needs
- Improve workplace safety with appropriate storage facilities, particularly chemical storage
- Improves ability to track inventory
- Address fleet circulation and delivery access around the Maintenance Facility Building
- Provides opportunity for reconfiguration of spaces to accommodate relocation of parts storage and staging

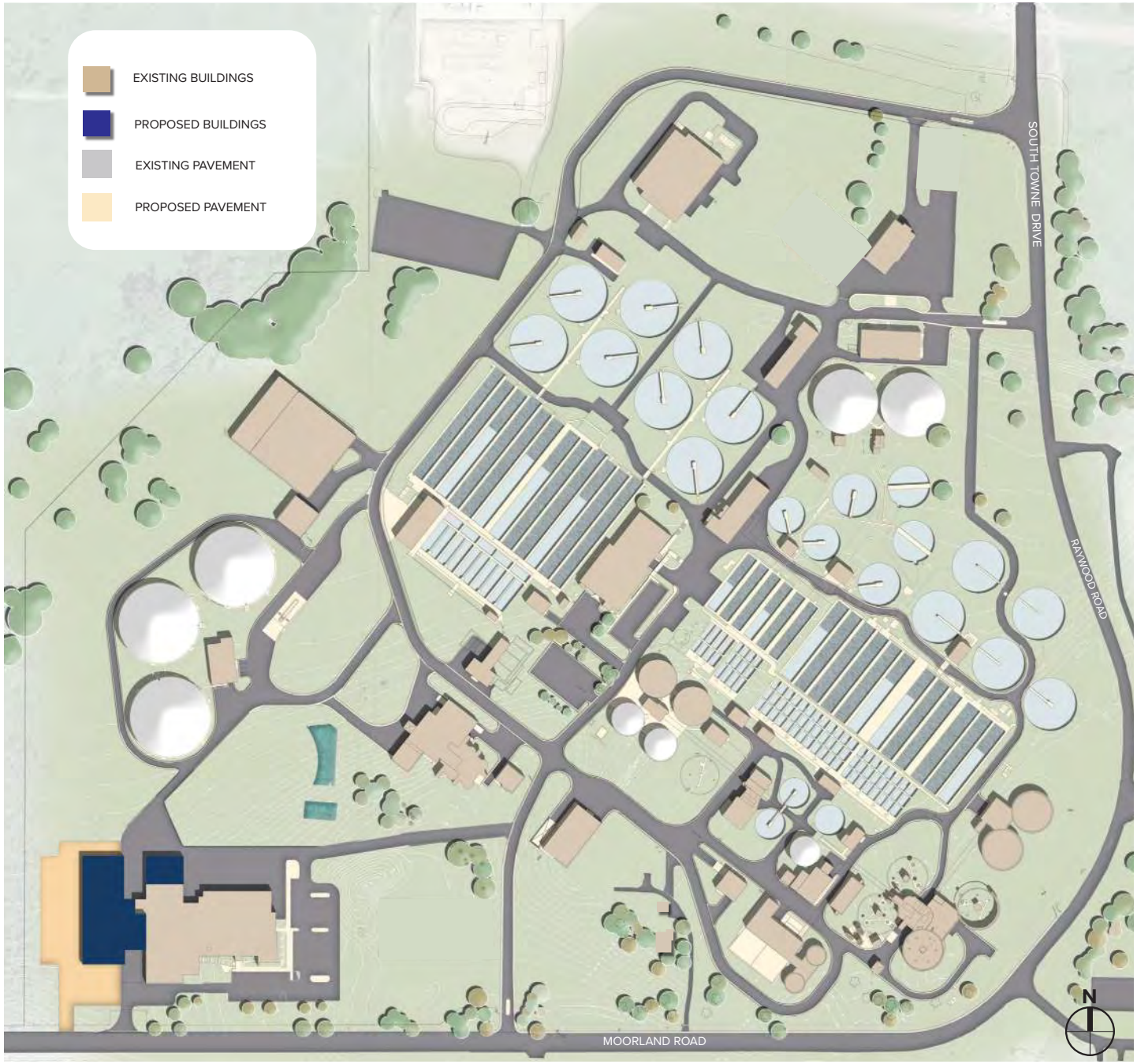

Figure 6.11. Maintenance Storage

CPIPP 8.0 Plant Expansion and Tertiary Treatment

Plan Reference: 2016 Liquid Processing Facilities Plan, 2012 Preliminary Nutrient Removal Cost Estimates Study

Due to the potential for more stringent regulatory requirements on nutrient discharge levels to Badfish Creek, Badger Mill Creek, and Rock River ecosystems, additional wastewater treatment may be required. The 2012 Preliminary Nutrient Removal Cost Estimates Study developed alternatives to meet potential new phosphorus and nitrogen discharge limits to these receiving waters. This may be accomplished by expanding secondary treatment facilities by increasing aeration tank volume, adding 2 clarifiers, and associated blower building, methanol storage, and feed facility in addition to tertiary treatment or the addition of a new membrane bioreactor (MBR) and a metal salt feed point.

Tertiary treatment adds a third, more advanced and rigorous level of nutrient treatment to the current Plant wastewater treatment process.

Strategic Performance Areas

- Adaptation
- Public Trust
- Regulatory Compliance

Program and Placement Considerations

- Secondary Treatment Expansion
  - Conservative estimate of space needs is 10-15 acres
  - Located to the west of Biosolids End-use Building, extending to the western Plant boundary
  - Expansion to the northwest is limited due to wetlands
- Tertiary Treatment I
  - Located to the east of the Effluent building
  - Requires removal of Storage Building No.1

Benefits

- Increased treatment capacity
- Reduction of nutrient loads for environmental and public health protection

Figure 6.12. Plant Expansion

CPIPP 9.0 Plant-wide Stormwater System

Due to the time of Plant installation and expansion, stormwater best management practices have only recently been implemented, most notably the Maintenance Facility Building (2016) as a requirement of City of Madiosn stormwater management requirements for development. During the planning process for the Capital Infrastructure Placement Plan, it was identified during the site analysis process that the District predominantly manages stormwater via overland flow to storm sewer pipes. A portion of the stormwater captured on-site is diverted to discharge within the wastewater treatment process.

Stormwater not discharged into the wastewater treatment is directed to a large stormwater pipe running west-east along the Gate 2 service road and discharges into a small creek east of South Towne Drive which joins with Nine Springs Creek. Limited volume control and water-quality treatment can increase flooding, cause erosion, increase pollutants and sedimentation in receiving waters.

With the eventual incorporation of the Nine Springs Wastewater Treatment Plant into the City of Madison and the availability of space due to the relocation of storage functions, a plant-wide stormwater management facility is recommended. Since 2016, the City of Madison has experienced many extreme storm events which elevate lake levels and can result in flooding of low-lying areas. Because of the Plant's location along the Nine Springs E-Way, and the nature of the District's business to protect the health of the surrounding environment, it is important for the District to consider ways to effectively manage stormwater not only for existing conditions, but in planning for future projects.

Strategic Performance Areas

- Adaptation
- Infrastructure Reliability
- Public Trust
- Regulatory Compliance

Facility Program

- Volume retained: 15 ac-ft
- Surface Area: 2.5 acres
- Storm Event: 10-year stored on-site
- Pretreatment at the source for each new impervious area or building, integrate stormwater management into the overall Plant landscape

Placement Considerations

- Along existing drainage patterns and low areas
- Northeastern corner of the Plant in the vicinity of Storage Buildings No.1 and 2, and Maintenance Shop No.2
- Between Effluent Storage Reservoir No.2 and Raywood Road

Benefits

- Improved Flood Control: A plant-wide system can help manage stormwater runoff by channeling it into designated storage and retention facilities. This can help prevent flooding and reduce property damage during heavy rain events.
- Water Quality Improvement: Stormwater runoff can carry pollutants like oil, trash, and bacteria into local waterways, harming aquatic ecosystems and posing a risk to public health. A plant-wide system can incorporate treatment measures like sedimentation basins and vegetated swales to help remove these pollutants and improve water quality.
- Cost Savings: Building and maintaining individual stormwater systems for each property or development can be expensive. A plant-wide system allows for shared costs between projects, or the cost is already encumbered due to upsizing of system when installed.
- Conservation of Natural Areas: By managing stormwater runoff through green infrastructure, like rain gardens and bioswales, a plant-wide system can help preserve natural areas and wildlife habitat.
- Community Resilience: A plant-wide stormwater system can enhance community resilience by providing a reliable and resilient system for stormwater management. This can help reduce the impact of extreme weather events and improve public safety.

Cost

- $2,180,000

Figure 6.13. *Stormwater*

CPIPP 10.0 Solids Digestion Expansion

PLAN REFERENCE: 2020 Energy Management Master Plan

There are many future scenarios that lead to expanded treatment and resource recovery. To accommodate more organic solids processing, high-strength waste (HSW), and increases in accepted waste for energy production, an expansion of digesters and solids digestion technology is possible.

The proposed vacation of Metrogro functions in the current Vehicle Loading Building (VLB) location provides an opportunity to expand the Plant to the east but requires relocation of Raywood Road. Historically, Raywood Road was realigned to the east to accommodate Plant expansion in the late 1970's.

Raywood Road relocation would allow incorporation of 4-4.5 acres within the main plant area. The additional land would provide the ability to expand digesters, add an HSW receiving facility (ideally located near the digesters), or the addition of co-generation facilities. It was noted that during the development of the 2020 Energy Management Master Plan process that electrical energy use has shown to hold relative steady (2007–2019) with on-site electrical generation gradually increasing (up to system capacity limitations), while purchased electricity has gradually decreased. This suggests the District has already begun an upward trend toward energy independence, but there exists room for expansion. Consolidation of land east of the digesters is integral to expansion of energy production on-site to add digester capacity.

This also aligns with Plant initiatives for improved security by containing all Plant functions within a contiguous area and decreasing the staff time needed to monitor plant functions. Relocation of the roadway would also address traffic concerns at Moorland Road/Raywood Road intersection and realign Capital City Trail to avoid conflicts with Plant functions.

The project's purpose is to realign Raywood Road to the east and install a new intersection of Raywood Road and Moorland Drive, potentially designed as a roundabout. Existing alignment of Raywood Road has a T-intersection with Moorland Road, known for crashes due to the limited sight lines along the sweeping curve of Raywood Road. Realigning the roadway to the east would allow the installation of a new roundabout intersection which have been shown to drastically reduce fatal and injury related crashes.

[1] 2020 Energy Management Master Plan. ES.3. Page 18.

Strategic Performance Areas

- Financial sustainability
- Infrastructure Reliability
- Public Trust
- Regulatory Compliance

Program and Placement Considerations

- Realign Raywood Road to the east
- Realign Raywood Road and Moorland Road intersection, add a round-about
- Additional 4-4.5 acres captured within contiguous Plant area
- Area could accommodate additional digesters and a High Strength Waste Facility
  - An option for a stand-alone High Strength Waste Facility

Benefits

- Addresses safety issues at the intersection of Raywood Road and Moorland Road
- Improves ability to secure and monitor critical plant operations.
- Provides approximately 4 acres to expand digesters, add high strength waste receiving, or the addition of co-generation facilities
- Opportunity to increase biogas production

Cost

- $4,840,000 (Raywood Road Realignment only)

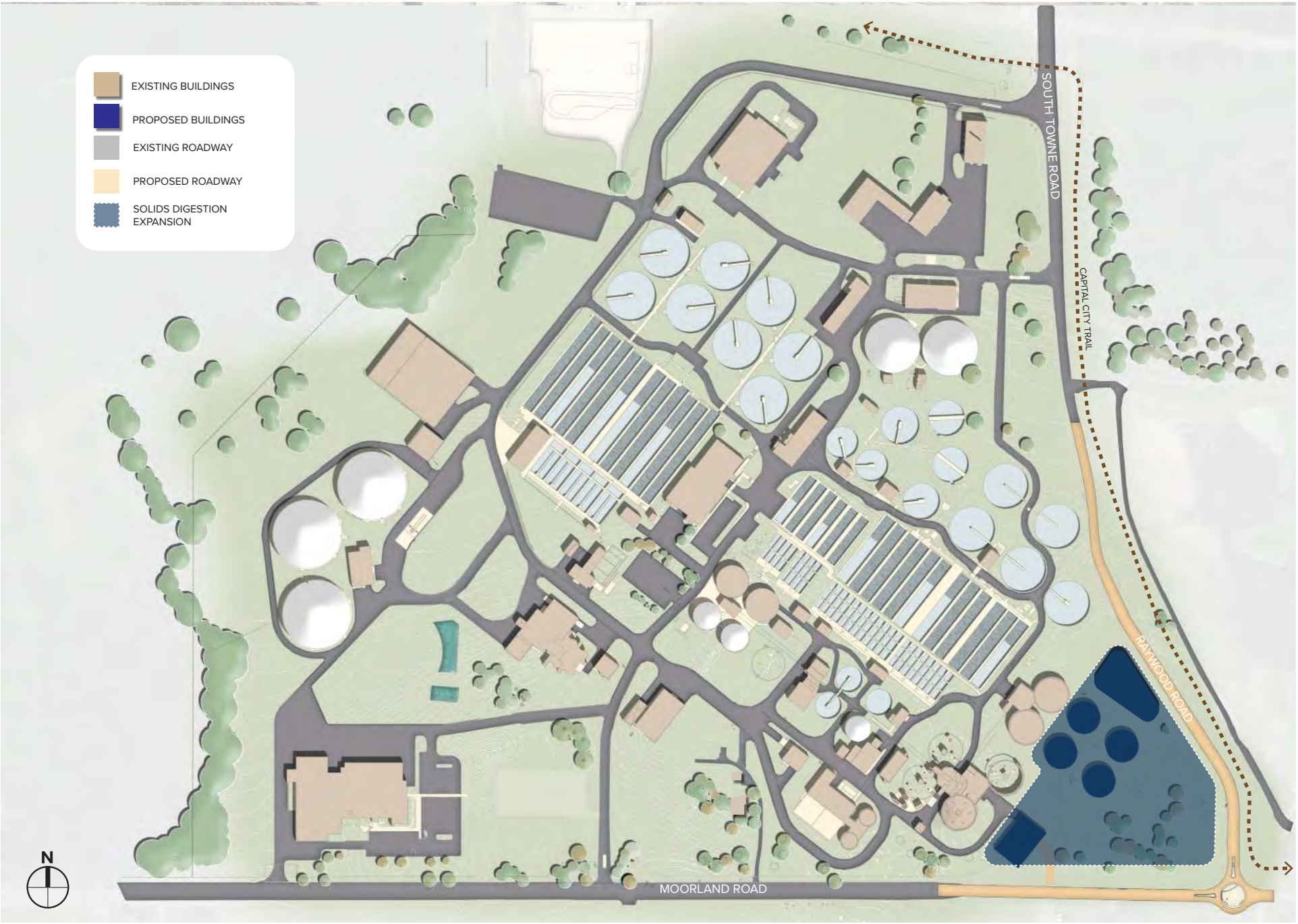

Figure 6.14 Solids Digestion Expansion

Figure 6.15 Proposed Land Use

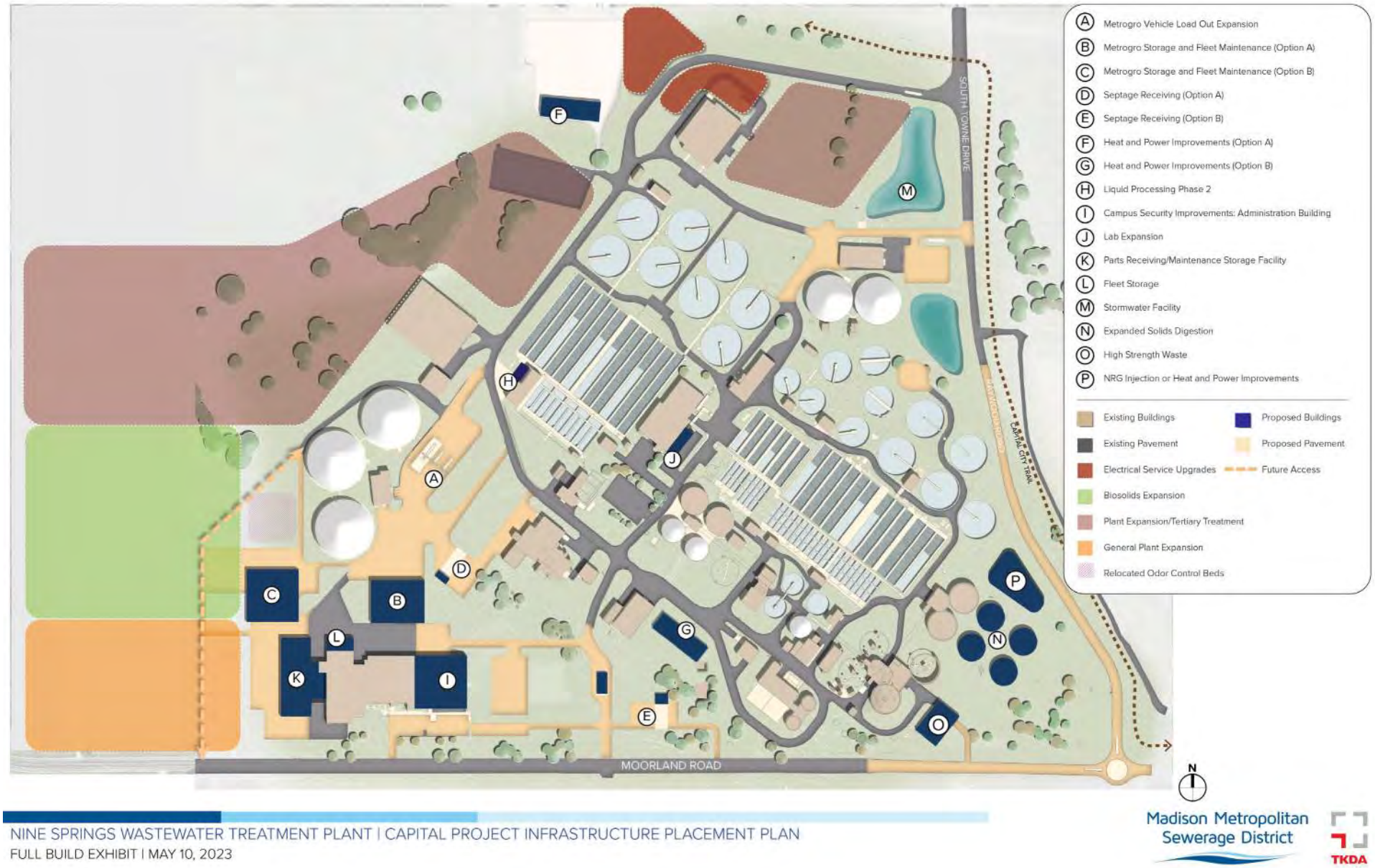

NINE SPRINGS WASTEWATER TREATMENT PLANT | CAPITAL PROJECT INFRASTRUCTURE PLACEMENT PLAN
FULL BUILD EXHIBIT | MAY 10, 2023

Madison Metropolitan Sewerage District

TKDA

Figure 6.16 Full CPIPP Build Out

Appendix A : Cost Summary

MMSD
Nine Springs Wastewater Treatment Plant
Capital Project Infrastructure Placement Plan
Cost Summary_ June 2023

Project capital costs were estimated for each of the identified projects. The opinion of probable cost (OPC) should be considered a Class 5 estimate (plus 100%/minus 50%) based on standards established by the Association for the Advancement of Cost Engineering (AACE) and American Society for Testing and Materials (ASTM). The OPC for each project was developed using information from similar projects and the consulting team's experience and judgment. The OPC will change as more information becomes available and the level of design detail is refined. The OPCs are provided to establish order of magnitude for capital planning budget purposes. Contingency as used in this OPC represents an allowance to cover unknown conditions that are not possible to be adequately defined from the information at the time it is prepared but must be accounted for by a sufficient cost to reasonably cover the foreseeable issues. Contingency is a part of the defined project scope and is not used to account for future project scope or schedule changes.

	CPIPP 1.0 Electrical Service Upgrades and Backup Generators		**CPIPP 2.1 Metrogro Loading Expansion**		**CPIPP 2.2 Metrogro Storage and Maintenance Facility**	
	Replaces the outdoor service switchgear, transformers, busway system and indoor distribution switchgear, and adds backup		Expand from 2 load-out stations to 6 at existing load-out area near Metrogro Storage Tanks. Requires Odor Control relocation.		Combine Vehicle Loading Building functions and Maintenance Shop No. 2 functions with additional Metrogro equipment storage.	
Item	**Description**	**Cost**	**Description**	**Cost**	**Description**	**Cost**
Previous Plan Estimate	CIP 2024	$ 12,101,250.00	NA		NA	
Demolition	NA	$ -	Relocate Odor Control beds,	$ 1,000,000.00	Remove Vehicle Loading Building	$ 500,000.00
Building	NA		NA			
					Storage & Maintenance Building (Replace VLB and Maintenance Shop	$ 5,670,000.00
Site Improvements	NA					
Utilities			2 Load-out islands (4 new load-out stations total)	$ 1,500,000.00	NA, incl. in building costs	$ -
Site Amenities			NA		NA	
Paving			Realign roadways, additional pave	$ 1,377,000.00	New access drive/parking area	$ 1,377,000.00
Grading/Restoration			Turf/landscape	$ 240,000.00	Turf/landscape	$ 900,000.00
Contingency (20%)				$ 823,400.00		$ 1,689,400.00
Subtotal				$ 4,940,400.00		$ 10,136,400.00
Design (15%)				$ 617,550.00		$ 1,267,050.00
Administrative Costs (6%)				$ 247,020.00		$ 506,820.00
TOTAL		$ 12,101,250.00		$ 5,804,970.00		$ 11,910,270.00

	CPIPP 3.0 Septage Receiving		**CPIPP 4.0 Heat and Power Improvements**		**CPIPP 5.0 Liquid Processing Phase 2**	
	Upgrade from 2 to 4 unloading stations at new facility. Includes volume metering, new building, direct-connect unloading, and site improvements.		Potential power improvements include either cogeneration improvements or pipeline injection. A determination on the best path forward for the District is forthcoming. This plan provides infrastructure placement considerations for both options.		Improvements to the liquid processing equipment for variable oxygen level delivery and treatment (low DO). Replacing existing east and west blowers, and electrical switchgears. There may be a need to expand the West Blower Building to accommodate new blower equipment.	
Item	**Description**	**Cost**	**Description**	**Cost**	**Description**	**Cost**
Previous Plan Estimate	NA		CIP 2023	$ 50,910,000.00	CIP 2024	$ 43,900,000.00
Demolition	Remove septage receiving trough @ Headworks	$ 100,000.00				
Building						
	Septage Receiving building	$ -				
Site Improvements						
Utilities	Connection to Heac	$ -				
Site Amenities	NA					
Paving	New access drive	$ -				
Grading/Restoration	Turf/landscape	$ -				
subtotal before contingency	$ -	$ 100,000.00	$ -	$ 50,910,000.00	$ -	$ 43,900,000.00
Contingency (20%)		$ 20,000.00				
Subtotal	$ -	$ 120,000.00	$ -	$ 50,910,000.00	$ -	$ 43,900,000.00
Design (15%)	$ -	$ 15,000.00	$ -		$ -	
Administrative Costs (6%)	$ -	$ 6,000.00	$ -		$ -	
TOTAL	$ -	$ 141,000.00	$ -	$ 50,910,000.00	$ -	$ 43,900,000.00

MMSD
Nine Springs Wastewater Treatment Plant
Capital Project Infrastructure Placement Plan
Cost Summary_ June 2023

	CPIPP 6.1 Administration Building/Access Control		CPIPP 6.2 Site Circulation and Wayfinding Improvements		CPIPP 7.1 General Workplace Improvements | Operations Bldg	
	Facility for public reception and control measures for primary and secondary entrances. Due to limited expansion potential of current Operations building, it is recommended to relocate a portion of staff functions to a new Administration Building to house public functions such as reception, office/work space, education and interpretation, meetings, and events.		Pedestrian and bicycle facilties and wayfinding signage. This does not include walks or trails required as part of other CPIPP projects.		Floor 2 renovations to address staff relocation to Administration Building, improve circulation, update meeting spaces (A/V technology), and provide wellness spaces. Floor 1 renovation to those areas not recently renovated.	
Item	**Description**	**Cost**	**Description**	**Cost**	**Description**	**Cost**
Previous Plan Estimate	NA		NA		NA	
Demolition						
Building						
	Administrative Building (LEED Cert)	$ 11,550,000.00			Second floor renovation	$ 4,250,000.00
	Controlled Access Building	$ 600,000.00			Lab Expansion	$ 1,760,000.00
Site Improvements						
Utilities	Incl. in bldg. cost					
Site Amenities	Fencing/gates	$ 928,431.57	Wayfinding Signage	$ 250,000.00		
Paving	Paving/Parking	$ 500,000.00	Ped/Bike facilities	$ 207,000.00		
Grading/Restoration	Turf/Grading	$ 360,000.00				
subtotal before contingency	$ -	$ 13,938,431.57	$ -	$ 457,000.00	$ -	$ 6,010,000.00
Contingency (20%)		$ 2,787,686.31		$ 91,400.00		$ 1,202,000.00
Subtotal	$ -	$ 16,726,117.89	$ -	$ 548,400.00	$ -	$ 7,212,000.00
Design (15%)	$ -	$ 2,090,764.74	$ -	$ 68,550.00	$ -	$ 901,500.00
Administrative Costs (6%)	$ -	$ 836,305.89	$ -	$ 27,420.00	$ -	$ 360,600.00
TOTAL	$ -	$ 19,653,188.52	$ -	$ 644,370.00	$ -	$ 8,474,100.00

	CPIPP 7.2 General Workplace Improvements | Storage		CPIPP 8.0 Plant Expansion and Tertiary Treatment		CPIPP 9.0 Plant-wide Stormwater Facility	
	Relocate receiving dock, distribution, and staff workspace, consolidate equipment stored in Storage Building No. 1 and 2, include designated chemical storage facility, and expand fleet storage.		Due to the potential for more stringent regulatory requirements in the future, additional wastewater treatment, including tertiary treatment, may be required. Type of future treatment is yet to be determined, no cost is provided.		15 ac-ft of stormwater storage to accommodate a 10 year storm event.	
Item	**Description**	**Cost**	**Description**	**Cost**	**Description**	**Cost**
Previous Plan Estimate	NA		NA		NA	
Demolition						
Building						
	Receiving and storage facility building	$ 6,380,000.00				
Site Improvements						
Utilities	Incl. in building cost				Stormwater pond + utilities	$ 1,544,034.60
Site Amenities	Incl. in building cost					
Paving		$ 300,000.00				
Grading/Restoration		$ 144,000.00				
subtotal before contingency	$ -	$ 6,824,000.00	$ -	$ -	$ -	$ 1,544,034.60
Contingency (20%)		$ 1,364,800.00		$ -		$ 308,806.92
Subtotal	$ -	$ 8,188,800.00	$ -	$ -	$ -	$ 1,852,841.52
Design (15%)	$ -	$ 1,023,600.00	$ -	$ -	$ -	$ 231,605.19
Administrative Costs (6%)	$ -	$ 409,440.00	$ -	$ -	$ -	$ 92,642.08
TOTAL	$ -	$ 9,621,840.00	$ -	$ -	$ -	$ 2,177,088.79

	CPIPP 10.0 Expanded Solids Digestion	
	In order to accommodate expanded solids digestion facilities, Raywood Road would need to be realigned to the east to capture land for expanded processes.	
Item	**Description**	**Cost**
Previous Plan Estimate	NA	
Demolition		
Building		
Site Improvements		
Utilities	Digester (1)	$ 1,700,000.00
Site Amenities		
Paving	Raywood Road realignment, trail reconstruction, round about	$ 1,825,000.00
Grading/Restoration		
subtotal before contingency	$ -	$ 3,525,000.00
Contingency (20%)		$ 705,000.00
Subtotal	$ -	$ 4,230,000.00
Design (15%)	$ -	$ 528,750.00
Administrative Costs (6%)	$ -	$ 211,500.00
TOTAL	$ -	$ 4,970,250.00

Appendix B : Stormwater Technical Memo

Stormwater Technical Memorandum

Madison Metropolitan Sewer District CPIPP

April 16, 2023

TKDA No. 20279

1.1 Existing Drainage Conditions

The site includes three areas of interest; the main treatment plant footprint, the bio-solids facility, and the additional property to the southeast of the main facility. Subcatchments for each property were delineated and flow directions were noted. It should be noted that the current drainage conditions point to all the water on the main facility footprint draining to a central area in the northern half of the plant

Table 1: Area Summary

	Total Area	Impervious Area	Pervious Area
Main Treatment Plant	140.6	23.8	116.8
Bio-solids Plant	2.8	1.6	1.2
Additional Area Owned by MSSD	62.2	0.4	61.8
Notes: All areas are in acres			

1.2 Model Methodology

A HydroCAD model was prepared using inputs generated by using information from MSSD, Dane County, and NOAA Atlas 14. This information was used to calculate curve numbers, estimate reach lengths, determine storm rainfall amounts, areas of impervious and pervious area in each subcatchment, and other items needed to perform a basic stormwater model. The intended result of this model was a high level estimate of the volume of water MSSD may need to store during 4 potential rain events with the following return intervals, 1, 10, 25, and 100 years.

1.3 Runoff Curve Numbers and Soils Information

Curve numbers were generated using land use data provided by MSSD, soils information from Dane County DCIGIS, and curve numbers from HydroCAD based on the land use descriptions provided. Provide a description of the soils information and resources used to determined land use and curve numbers. **Table 2** contains a summary of the runoff curve numbers used for each land use type.

Table 2: Land Use

Land Use Type	Runoff Curve Number (B Soils)	HydroCAD Description
Impervious Areas	98	Streets and roads paved, buildings, tanks
Pervious Areas	61	75% grass cover, good, HSG B

1.4 Rainfall

The design rainfall amounts used for the project were taken from NOAA Atlas 14. In accordance with the Code of Ordinances City of Madison, Chapter 37, Section 09, the NRCS MSE 4, 24-hour rainfall distribution was used for all storms modeled in this effort. **Table 3** contains a summary of the 24-hour rainfall totals for the various storm events, using the center of the main treatment plant as the basis.

Table 3: Rainfall Amounts

Design Event	Rainfall Total (inches)
2-Year	2.85
10-Year	4.06
50-Year	6.25
100-Year	6.57

2.0 Model Results

Description of the method and calculations for rate control. Reference Appendix G.

Table 4: Comparison of Peak Storage

Discharge Location	1-Year Event	10-Year Event	25-Year Event	100-Year Event
	Exist. (ac-ft)	Exist. (ac-ft)	Exist. (ac-ft)	Exist. (ac-ft)
Main facility	4.407	14.134	20.914	34.681
Biosolids plant	N/A	N/A	N/A	N/A
Additional property	1.999	4.684	7.413	3.97
Total	**6.406**	**18.818**	**28.327**	**38.651**

3.0 Storm Detention System Design

A 10-Year storm was used as the basis for the design of a stormwater detainment pond. The pond could be located on the eastern side of the main facility footprint, in a space currently occupied by two buildings, a concrete drive, and some limited green space, including maintained grass and some trees. The potential pond has an overall surface area of 2.5ac and with a depth of 8 feet, can store up to 15ac-ft of water during a storm event, before needing to be routed to a different location. This storage will allow for the 10-Year event to be completely stored on site,

4.0 Wetlands or Other Site Topics

The site is located near many large bodies of water, and parts of the facility are located in areas identified on FEMA FIRMETTE maps of the area. As such, there may be additional storage requirements, including a specific water quality volume, as well as the ability to contain more water due to the potential effects on downstream areas.

Appendix A

Existing Catchments and Proposed Pond Layout

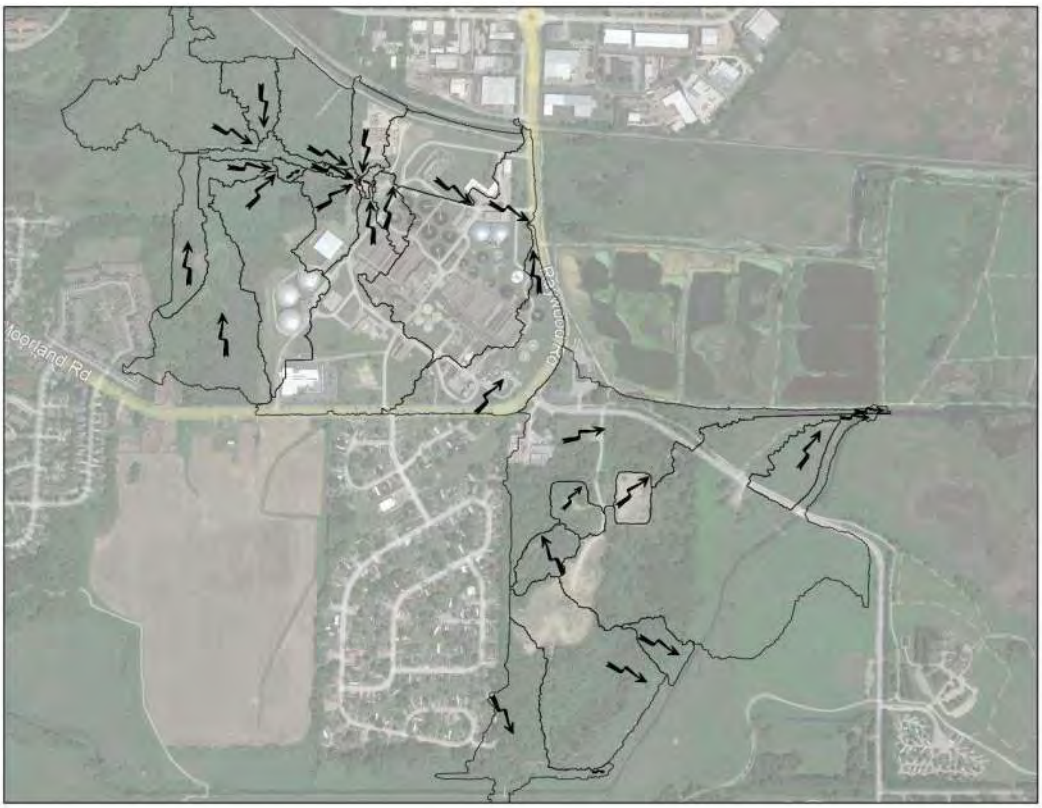

Appendix C : Roundabout Feasibility

Memorandum

To:	Seth McClure, MMSD	**Project Reference:**	Madison Metropolitan Sewerage District (MMSD)
Copies To:		**TKDA Project No.:**	20279.000
From:	Lindsay Gaines, PE, PTOE	**Client No.:**	2205638 (CIP D04)
Date:	June 8, 2023		

Preliminary Roundabout Feasibility at the Madison Metropolitan Sewerage District

Introduction

This memo seeks to provide preliminary calculations and analysis to examine the feasibility of a roundabout in the southeast corner of the Madison Metropolitan Sewerage District (MMSD or "the District"). This roundabout would replace the existing three-legged, side street stop controlled intersection of Raywood Rd and Moorland Rd. The roundabout would not necessarily be located at the existing location of this intersection, and instead may be located further south and east. A new location would allow the entire MMSD right of way to be contiguous and uninterrupted by public roadways. This memo does not replace a roundabout justification report. This memo is intended to collect readily available information and perform simple analysis and calculations in order to allow stakeholders to make an informed decision about whether or not to proceed with an in-depth analysis of the potential roundabout.

A roundabout justification report would require traffic counts to be collected at the intersection in question and would include traffic modeling comparing existing and proposed future conditions. In addition, existing utilities and available right of way should be carefully examined to determine if there are any fatal flaws for a roundabout at this location.

Analysis

The quality of traffic operations for a roundabout is highly dependent on the volume of traffic the roundabout experiences, as well as the orientation of those volumes. Existing traffic volume information was pulled from the City of Madison's online Traffic Count map. Turning movement counts were not available, but daily traffic volumes were available for each leg of the intersection. The north leg had 8,550 daily vehicles, the west leg had 5,650 daily vehicles, and the southeast leg had 2,800 daily vehicles, see Figure 1. All three data points were collected in 2019. From this data, an assumed "K" factor was needed to convert daily volumes into a peak hour volume.

An assumed K value was determined by examining the historic traffic study, "Beltline PEL Existing Conditions Report," which was conducted by a consulting agency on behalf of the Wisconsin Department of Transportation and published in 2015. From this report, the south leg of the intersection of S Towne Dr and Industrial Dr can be examined. S Towne Dr is the same road as Raywood Rd, though further to the north. During the AM peak hour, the south leg had 318 southbound vehicles and 322 northbound vehicles. During the PM peak hour, the south leg had 370 southbound vehicles and 386 northbound vehicles. Since the PM Peak hour had greater volumes than the AM Peak hour, the PM Peak hour will be used for this analysis. Using this peak hour data as well as the daily volumes, a K factor was calculated at 8.5% for the project area. This value seems reasonable, since a typical K value for an urban area is 7-9% and this project area is urban. For reference, a typical value for a suburban area is 9-12% and a typical value for a rural area is 12-18%. Ideally, K factors would be calculated for each leg of the roundabout individually, however hourly data was not available for the other roadways.

Using the daily volumes and the calculated K value, the following peak hour volumes were estimated, see Figure 1. It was assumed that the directional split for each leg was roughly 50/50. For example, the Raywood Rd leg is estimated to have 366 southbound vehicles and 349 northbound vehicles. The number of vehicles traveling northbound roughly equals the number of vehicles traveling southbound.

Figure 1 – Estimated Existing Traffic Volumes

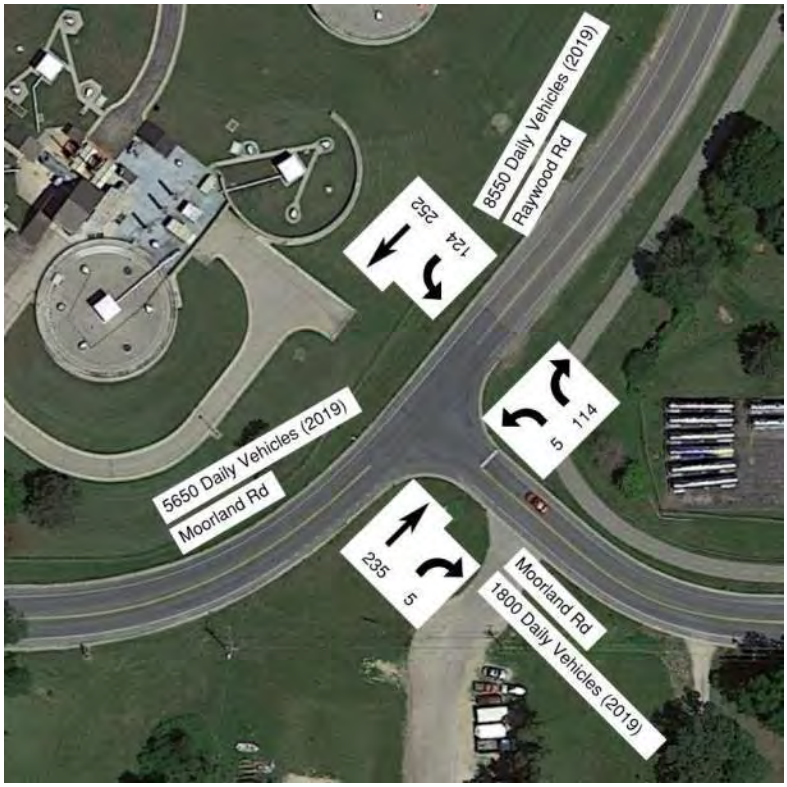

The Highway Capacity Manual provides formulas to estimate the capacity of each leg of a roundabout. The Highway Capacity Manual is a publication of the Transportation Research Board (TRB) and is a national standard for highway capacity analysis. See Figure 2 for the formula chosen for this analysis. It was assumed that the proposed roundabout would be a single lane roundabout without bypass lanes. The existing volumes and geometry do not suggest a need for a multi-lane roundabout. This formula assumes that all vehicles traveling through the roundabout are passenger cars. These results would need to be modified to account for the expected percentage of heavy trucks. Truck data is unavailable for roadways in question; however, considering that the estimated capacity far exceeds the estimated volume, there is a notable level of confidence that the roundabout would still be under capacity when the trucks are accounted for. See Table 1 for results.

Since there is a level of uncertainty regarding the actual (vs estimated) traffic volumes at this intersection, a sensitivity analysis was completed. The estimated volumes and capacity were calculated under the assumption of a K factor of 12% instead of 8.5%. This increases the estimated volumes at the intersection and lowers the capacity, see Table 2. However, the intersection is still well within capacity for a single lane roundabout.

Note that the Highway Capacity Manual formula refers to entering traffic volumes, or one-way traffic volumes. The daily traffic volumes provided by the City of Madison online map are two-way volumes. The directional split was assumed to be 50/50, and thus the daily volumes were divided by two to determine the entering daily volumes.

Table 1 – Estimated Volumes versus Estimated Capacity (K = 8.5%)

	Estimated Entering Volume [vehicles]	Estimated Entering Capacity [vehicles]
Moorland Rd (SW leg)	240	940
Moorland Rd (SE leg)	119	1080
Raywood Rd (NE leg)	376	1222
Notes:		

Table 2 – Sensitivity Analysis (K value = 12%)
Estimated Volumes versus Estimated Capacity

	Estimated Entering Volume [vehicles]	Estimated Entering Capacity [vehicles]
Moorland Rd (SW leg)	339	891
Moorland Rd (SE leg)	168	976
Raywood Rd (NE leg)	428	1162
Notes:		

Figure 2 – Excerpt from the Highway Capacity Manual, Chapter 22, page 22-4

Single-Lane Roundabouts

The capacity of a single entry lane conflicted by one circulating lane (e.g., a single-lane roundabout, illustrated in Exhibit 22-2) is based on the conflicting flow. The equation for estimating the capacity is given as Equation 22-1.

Equation 22-1

$$c_{e,pce} = 1{,}380e^{(-1.02\times10^{-3})v_{c,pce}}$$

where

$c_{e,pce}$ = lane capacity, adjusted for heavy vehicles (pc/h); and

$v_{c,pce}$ = conflicting flow rate (pc/h).

Exhibit 22-2
Example of One-Lane Entry Conflicted by One Circulating Lane

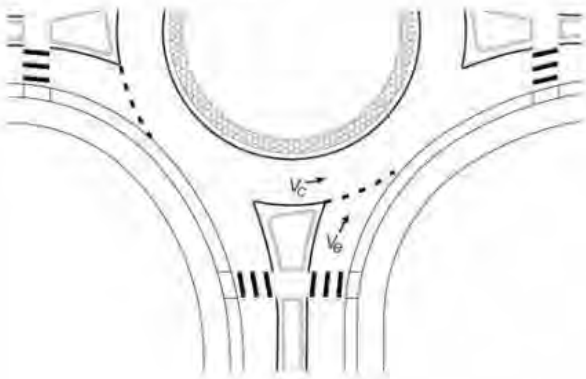

LKG:JAH:LMF
K:\g-m\Madison Metropolitan Sewerage District\20279000\04_Production\05_Reports\Traffic\MMSD - Roundabout Memo.docx

Appendix D: Meeting Materials and Notes

Madison Metropolitan Sewerage District

Nine Springs Wastewater Treatement Plant

Capital Project Infrastructure Placement Plan

Design Team Handbook

Updated 11/11/2022

Table of Contents

Section 01
Project Background

Section 02
Madison Metropolitan Sewerage District Organization Chart

Section 03
Stakeholder Questionnaires

Section 04
Wastewater 101

01/Project Background

Every day the MMSD works to protect public health, the environment and our local waters through innovation, sustainability, and resource recovery. The Nine Springs Wastewater Treatment Plant (Plant) has served the Madison area for over 90 years, during which 11 major additions to the Plant have been constructed without a formal master plan to guide decisions regarding placement and functionality. As MMSD plans for the future operation and expansion of the Plant, a campus master plan is needed to ensure the MMSD's priorities are met and infrastructure improvements are completed orderly and efficiently on the limited remaining campus area.

The master plan will be developed following the goals the MMSD laid out in their updated strategic plan, to meet the needs of the MMSD's customer communities and the environment.

To meet future needs, the study shall encompass:

During development of the plan our team will develop an engagement strategy that will include interviews with key stakeholders to document their institutional knowledge, preferences for future plant improvements, and be asked to provide input on proposed alternatives. Through an interactive process this feedback will be distilled into the campus master plan. This plan will allow the MMSD to confidently move forward with improvements and provide a basis on how the MMSD is implementing improvements to customer communities.

SCOPE (IN BOUNDS)

The first step in the project is development of the Project Team Charter. The last step is delivery of the Nine Springs Facility Wastewater Treatment Plant Capital Project Infrastructure Placement Plan. The project area is the Nine Springs Wastewater Treatment Plant, including vacant land around the plant previously purchased by the District for the purposes of wastewater treatment, including operations, maintenance and administration.

The project will result in a Capital Project Infrastructure Placement Plan for the Nine Springs Wastewater Treatment Plant. The plan will include up to three (3) illustrated site plan alternatives, with a narrative identifying the strengths and weaknesses of each alternative, and planning level cost estimates assuming 2023 dollars.

SCOPE (OUT OF BOUNDS)

The project does not include the following:

- Design of specific projects
- Analysis or selection of alternatives from previously adopted plans
- Financial impact analysis of the alternatives on the District's Capital Program. (Note: This work may be accomplished by District staff)

Out of scope issues identified during the course of the project will be recorded for the District and placed in the "parking lot."

Project Schedule

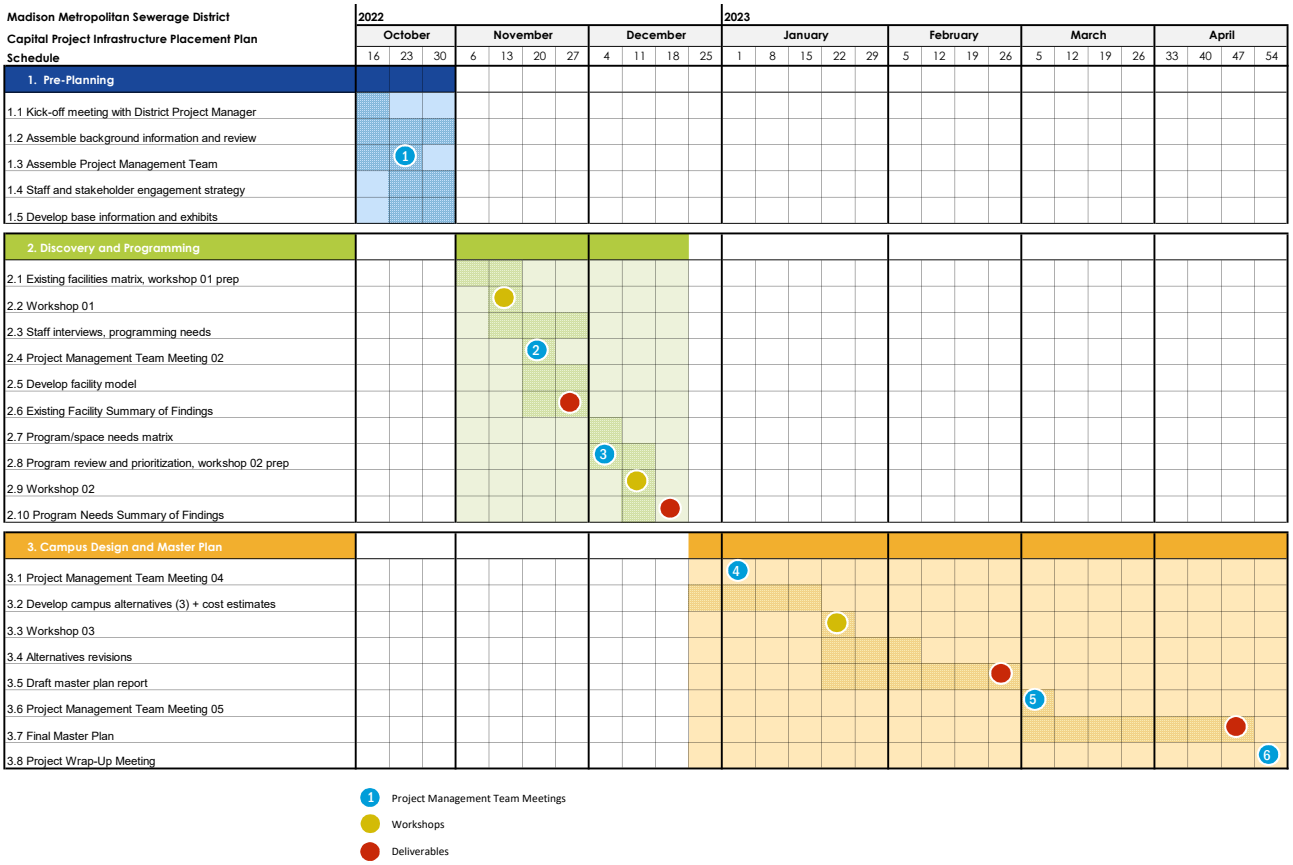

Workshop Schedule

Activity	Time	Location
Tuesday, November 15, 2022		
Pre-meeting: Team Orientation with Eric/Seth	8:00 AM - 9:00 AM	Multi Purpose Room
Meeting 01: CIP Review	9:00 AM - 10:00 AM	Executive Conference Room
Break	10:00 AM - 10:15 AM	
Meeting 02: Project Goals/Visioning (non-CIP)	10:15 AM - 11:45 AM	Executive Conference Room
All Planting Meeting (TKDA Lunch Break)	11:45 AM - 1:00 PM	
Plant Tour	1:00 PM - 3:30 PM	NSWWTP
TKDA Team Debrief/Work	3:30 PM - 5:00 PM	Training Room

Tuesday, November 16, 2022		
Meeting 03: Comms/RT/Ecosystem	8:30 AM - 10:00 AM	Training Room
Break	10:00 AM - 10:30 AM	
Meeting 04: O&M/Engineering/IT	10:30 AM - 12:00 PM	Training Room
Break/Lunch	12:00 PM - 1:00 PM	
Meeting 05: O&M/Engineering/IT/Lab	1:00 PM - 2:30 PM	Training Room
Break	2:30 PM - 3:00 PM	
Workshop Debrief	3:00 PM - 4:00 PM	Executive Conference Room

Existing Campus Map

Madison Metropolitan Sewerage District

TKDA

NINE SPRINGS WASTEWATER TREATMENT PLANT - CAMPUS MAP

MADISON METROPOLITAN SEWERAGE DISTRICT

WORKSHOP 01: NOV. 15-16, 2022

0 100 200 FT

1" = 100'

N

02/Madison Metropolitan Sewerage District Organization Chart

Madison Metropolitan Sewerage District

Updated 09-28-2020

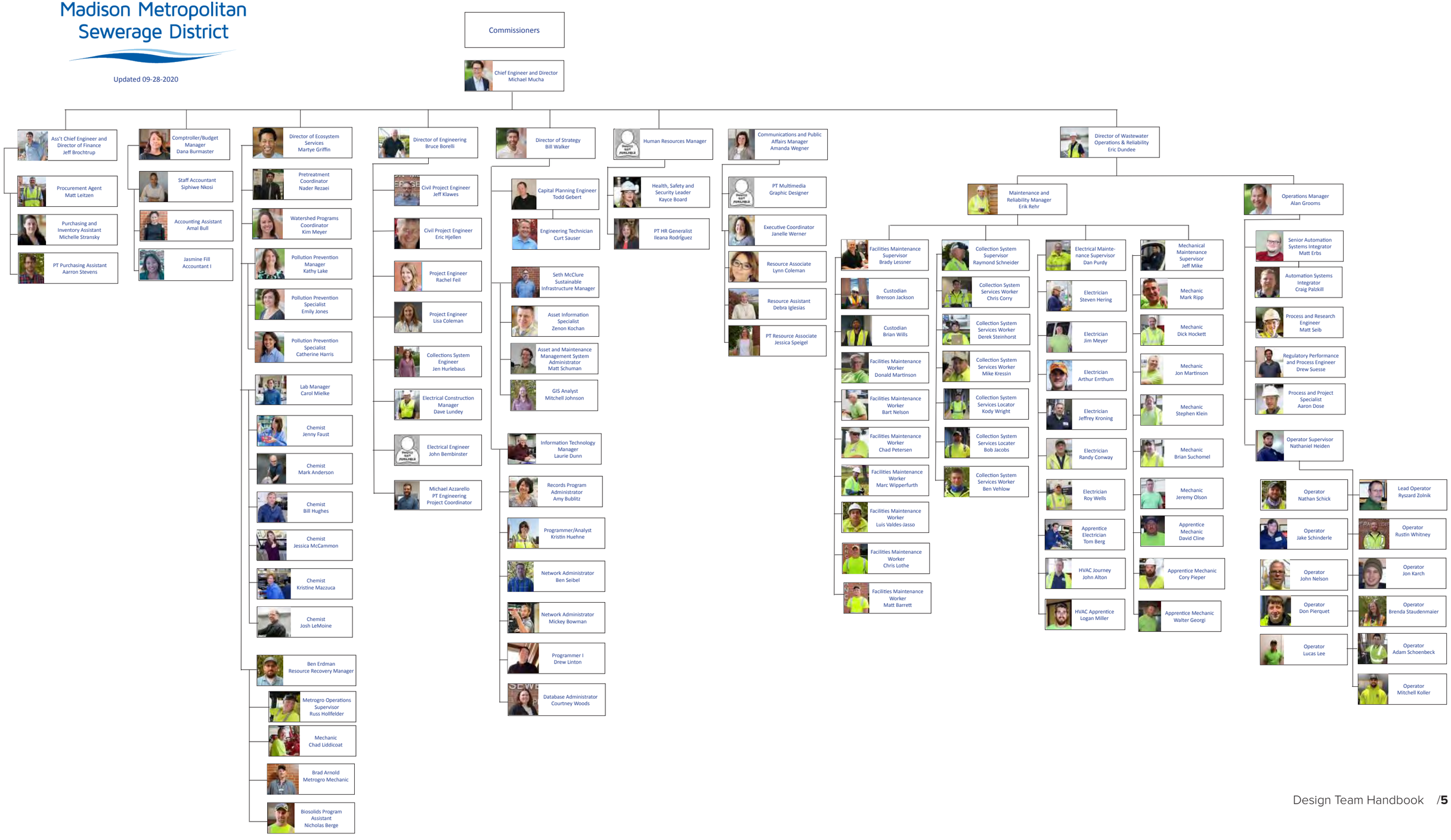

03/Stakeholder Questionnaires

Date: _____

Respondent/s Name/s: _____

Email: _____

Phone: _____

Site/Campus

Circulation/Access

What is the current main entrance?

How many visitors/groups come to the site on a daily basis?

How do pedestrians move throughout the site?

Is continuous access required to the substation via WWTP property?

Vehicle Type and Quantity:

Do tour groups arrive in buses?

How many septage trucks are received on an average day? How are the trucks billed and tracked? Are there specific dumping hours?

Parking:

Should parking be concentrated or located throughout the site?

Should visitor parking be separate?

Is visitor parking best located inside or outside the secured area?

What does a ‘green fleet’ look like to MMSD? (Bikes, Electric cars + Charging stations)

O&M General

Who removes snow? Is it stored on site? What types of vehicles are used for snow removal?

Are there areas not well-utilized? Storage areas that are unsightly or unorganized?

Utilities

Who are the utility providers?

Who is the waste management provider and how often is pickup?

Vegetation & Drainage

Who maintains the lawn and landscape? General guidelines for appearance and maintenance?

Is there any interest in having more sustainable landscapes such as native prairie areas or raingardens?

Are there specific topographic or drainage concerns?

Site Amenities

Amenities you wish to see on campus (outdoor break areas, walking trails, outdoor fitness areas)?

Campus Experience/Perception

What odor control is currently in place and how is it working? Have there been public complaints? Operational concerns issues? Have alternative systems been considered?

Complaints from adjacent property owners?

Views to capture or buffer?

What does a public entrance look like to MMSD? (Updated signage, learning exhibits, green space, and informative signage around the plant?)

Do you have a space to start/end tours?

Security

What is your current security system and is it internal or hired? If the site is fully secured what does security look like (internal team, external, 24/7, unmanned, etc.)?

Mechanical Space Needs

What are the leaving hot water conditions from the boiler plant? The drawing indicates 180 deg F at the building, a few degrees warmer at the plant?

Does the plant have spare heating and pumping capacity and if so, how much?

How old is the plant and is it in good working order? Estimated remaining service life?

What is the current fuel source & will it remain or are there considerations for switching to something else?

How is the piping brought to the buildings? Direct bury or tunnels?

The Maintenance Building has heat pumps and hot water units. Are they working satisfactorily? Would similar systems be desired or are there other systems in mind?

What are operating characteristics of effluent system, temperature, pressure? Is there spare pumping capacity for future?

There is an expressed need for storage space. Would all storage space need to be conditioned? Perhaps heated only?

Are there any site restrictions about noise, building heights, site lines to equipment? What precautions are needed for security?

Are special materials needed? Stainless Steel or fiberglass?

Any thought to carbon free?

Are the utility drawing up to date and accurate?

Electrical Space Needs

Has there been any solar energy site assessments completed?

Has there been any biogas studies completed?

Identify the number and location of access points? Are they adequate?

Identify the number and location of security cameras? Does coverage satisfy Department of Homeland Security intent, “we should only be fencing what we need to and can see.”

Will planned medium-voltage upgrade be done in new location & removed from its existing location?

Are there any existing issues with the electrical systems?

Identify any dated and/or worn equipment?

Identify any overloaded equipment?

What are your other electrical concerns?

WASTEWATER TREATMENT PLANTS

TOOLBOX

APWA's Water Resources Management Committee is a group of dedicated volunteers who provide valuable education on Water Resources Management topics. The committee has created the Wastewater Treatment Plants Toolbox. This toolbox is intended to be an overview for individuals new to this area of public works. It can also be used as education for residents and the governing body of your agency.

Wastewater treatment plants receive used, dirty water from homes, businesses, and industries through a system of sewer pipes and lift stations. The treatment plant cleans the water to standards designed to protect public health and the environment and returns that clean water to the environment (usually a surface water body like a river, stream, or lake) or to a system for water reuse. Wastewater treatment uses physical, biological, and chemical processes to clean the water and prepare it to be released.

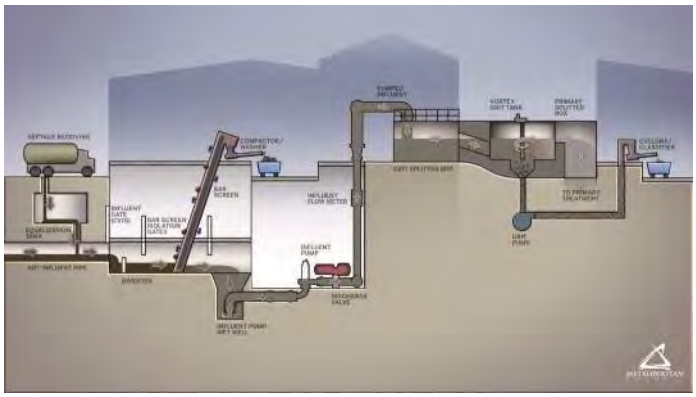

An overview of the preliminary treatment process at Empire Wastewater Treatment Plant.

PRELIMINARY TREATMENT: REMOVING OBJECTS, SAND, AND GRIT

When wastewater enters the treatment plant, it carries with it everything that was flushed down a toilet or rinsed down a drain, like rags, food particles, or other objects. For communities with combined sewer systems—where stormwater and wastewater are collected together—the water entering the treatment plant also includes objects and sand carried over surfaces into stormwater grates by runoff.

The first step of preliminary treatment is a screen, which removes large objects (a quarter of an inch or larger, for example). This includes sticks, rocks, or rags that might clog or damage the equipment in the treatment plant. The second step of preliminary treatment is a *grit chamber,* where sand and other small, heavy particles to settle to the bottom and are removed.

A barscreen removes large objects at the entry of Empire Wastewater Treatment Plant

PRIMARY TREATMENT: SEPARATING THE SOLUTION

After removing the largest particles from the wastewater, there are still organic solids suspended in the water. In primary treatment, the wastewater flows into primary clarifiers, known as sedimentation tanks, where heavy solids are given time to sink out of solution to the bottom of the tank; while fats, oils, and grease float to the top. *Skimmers* move slowly along the bottom of the tank to collect the solids and across the surface of the water to collect fats, oils, and grease (sometimes called *FOG* or *primary scum*). The solids, called *sludge* or *primary biosolids*, can be processed and then discarded in a landfill, incinerated, or applied to land as fertilizer.

A primary clarifier allows heavy solids in the wastewater sink and fats, oils, and greases float to the top at Empire Wastewater Treatment Plant. At this plant, the biosolids are processed and applied to agricultural fields as fertilizer.

SECONDARY TREATMENT: PUTTING THE BACTERIA TO WORK

In secondary treatment, plant operators put the bacteria (*activated sludge*) already in the wastewater to work. The bacteria use a natural process to break down the nutrients that remain in the water. Treatment plants accelerate that process by adding sludge with a lot of bacteria present and pushing air into the tanks (*aeration*) or agitating the water to add air, which helps create an

continued on next page >>

environment for the bacteria to grow. As the bacteria consume the nutrients, large particles are created and settle to the bottom of the tanks. Like the sludge separated in primary treatment, a portion of these solids are removed from the tank, processed, and can be discarded in a landfill, incinerated, or applied to land as fertilizer. The remaining portion are recycled back into the water treatment process.

DISINFECTION: RETURNING SAFE WATER TO THE ENVIRONMENT

Before releasing the water to the environment, it is disinfected to remove any remaining disease-causing bacteria. This helps ensure the water is safe for all downstream users of the water, including people and wildlife. Water is often disinfected with chlorine, but some treatment plants use ozone or ultraviolet (UV) light for disinfection. When chlorine is used, the water is tested, and may be dechlorinated, before it is released to the environment.

SOLIDS HANDLING: A RENEWABLE RESOURCE

Solids that settle out of the treatment processes can be reused right at the wastewater treatment plant or in the community. Solids can be incinerated on site; some plants use the steam created to support plant operations. In some plants, solids may be sent to a *digester*, where they are broken down and the organic components are reduced. This process creates methane gas which can be captured and burned for energy to power plant equipment or provide heat. The solids that remain can be incinerated to generate additional energy or they can be applied to agricultural fields as a nutrient-rich fertilizer.

**All images are courtesy of the Metropolitan Council Environmental Services (MCES). MCES provides wastewater services to 110 communities in the Twin Cities region.*

Aeration tanks at Metropolitan Council's (Minnesota) Empire Wastewater Treatment Plant create a thriving environment for bacteria to break down nutrients in the water.

UV channels at Metropolitan Council's (Minnesota) Empire Wastewater Treatment Plant operate April through October to disinfect treated wastewater before it is returned to a local river.

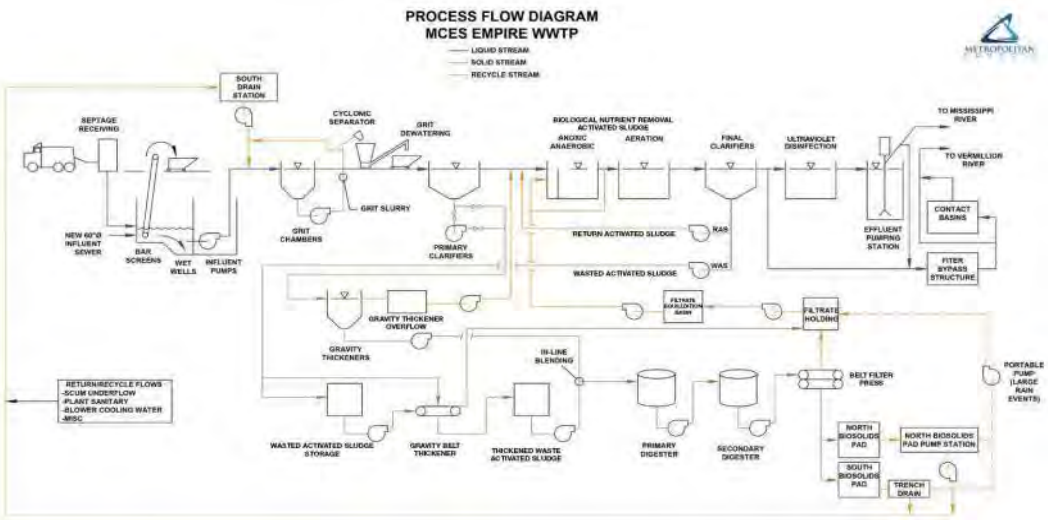

A process flow diagram of the treatment process at Empire Wastewater Treatment Plant.

FOR MORE INFORMATION

Metropolitan Council Video Library
https://metrocouncil.org/Wastewater-Water/Projects/Metro-Plant-Solids-Management/Videos.aspx

US Environmental Protection Agency: Primer for Municipal Wastewater Treatment Systems
https://www.epa.gov/sites/production/files/2015-09/documents/primer.pdf

Cole Parmer: The Wastewater Treatment Process
https://www.coleparmer.com/tech-article/eight-stages-of-wastewater-treatment-process

Concerning Reality Educational Video: How Do Wastewater Treatment Plants Work?
https://www.youtube.com/watch?v=FvPakzqM3h8

Glossary of Wastewater Terms

Activated Sludge

Sludge that has undergone flocculation forming a bacterial culture typically carried out in tanks. Can be extended with aeration.

Advanced Primary Treatment

The use of special additives to raw wastewater to cause flocculation or clumping to help settling before the primary treatment such as screening.

Advanced Wastewater Treatment

Any advanced process used above and beyond the defacto typical minimum primary and secondary wastewater treatment.

Aerobic Wastewater Treatment

Oxygen dependent wastewater treatment requiring the presence of oxygen for aerobic bacterial breakdown of waste.

Alkalinity

A measure of a substances ability to neutralize acid. Water containing carbonates, bicarbonates, hydroxides, and occasionally borates, silicates, and phosphates can be alkaline. Alkaline substances have a pH value over 7

Anaerobic Wastewater Treatment

Wastewater treatment in the absence of oxygen, anaerobic bacteria breakdown waste.

Bacteria

Single cell microscopic living organisms lacking chlorophyll, which digest many organic and inorganic substances. An essential part of the ecosystem including within human beings.

Bioengineering

The use of living plants as part of the system, be it wastewater treatment, erosion control, water polishing, habitat repair and on.

Biosolids

Rich organic material leftover from aerobic wastewater treatment, essentially dewatered sludge that can be re-used.

BOD - Biochemical Oxygen Demand

Since oxygen is required in the breakdown or decomposition process of wastewater, its "demand" or BOD, is a measure of the concentration of organics in the wastewater.

Clarifier

A piece of wastewater treatment equipment used to "clarify" the wastewater, usually some sort of holding tank that allows settling. Used when solids have a specific gravity greater than 1.

COD - Chemical Oxygen Demand

The amount of chemical oxidant required to breakdown the wastes, also an indicator of the concentration of organics.

Cold Climate Limitations

The limitations of various wastewater treatment options caused by severe cold and its incidents such as ice, snow, very low temperatures and so on.

Combined Sewer

Combining the municipal sewer systems with storm drainage. Risks overpowering the system in large rain events. The benefit is that pollutants from storm drainage get treated,

Combined Sewer Overflow (CSO)

When a combined sewer system is overpowered by storm drainage and overflows.

Constructed Wetland

An artificially created wetland usually with a waterproof lining for wastewater purification. Detention, flow rates, types of plants and other parameters are controlled to improve BOD, SS and N removal. Typical riparian plants like cattails and reeds are used to provide bacteria with an oxygenating root zone.

Detention Time - Retention Time, Residence Time

How long on average wastewater undergoes the wastewater treatment process. Time vary greatly across various types of wastewater treatment, from minutes to weeks.

Dewatered Sludge

The sludge after it's been dewatered, also know as sludge cake.

Dewatered Sludge Cake

The sludge after dewatering that is cake like, compressed. The lower the water content the better for wastewater treatment purposes.

Dewatering

Removing water from sludge or other solids.

Digestion

The breaking down of sludge and other waste biologically by microorganisms. Results in byproducts such as methane gas, carbon dioxide, sludge solids and water. Aerobic digestion requires oxygen, anaerobic digestion the absence of oxygen.

Denitrification

Biologically removing nitrate converting it to nitrogen gas.

Disinfection

The use of chemicals to kill any disease causing organisms in the polished wastewater. UV light can also be used.

Dissolved Oxygen (DO)

The amount of oxygen dissolved in the water. Measured in milligrams per liter.

Ecological Engineering

Systems designs that are considered to be "sustainable", that is with the aim of having little to no impact on earth's ecology. See Industrial Ecology.

Effluent

The final output flow of a wastewater treatment plant.

Extended Aeration

An aeration system that adds aerobic sludge digestion to the activated sludge process.

Facultative Ponds

Wastewater ponds with some form of aeration for oxygen replenishment. Can also use algae and other plants for oxygen replenishment.

Floc

Particulate and or bacterial clumps forming wooly looking clusters in wastewater. In biological processes such as extended aeration or activated sludge and others the floc contains aerobic or anaerobic microorganisms. For industrial applications flocculants are used.

Flocculation

The process whereby a chemical or other substance is added to wastewater to trap or attract the particulate suspended solids into clusters or clumps of floc or flocculent, wooly looking masses.

Flocculating Agent

The flocculant or chemical used to cause flocculation.

Flocculant

Same as flocculating agent, the catalyst substance that causes the chemical reaction with TSS to form flocculent many times encapsulating the solids.

Flocculent

The "floc" or wooly mass of clusters that is formed in flocculation. Many times used interchangeably with "flocculant" however truly refers to the floc mass and not the catalyst flocculating agent.

Free Water Surface Wetland (FWS)

A constructed wetland or other shallow wastewater treatment pond where the shallow water is exposed directly to the air.

Grease

Fats, soaps, oils, waxes and etc. in wastewater.

Grit Chamber

Usually in municipal wastewater treatment, a chamber or tank in which primary influent is slowed down so heavy typically inorganic solids can drop out, such as metals and plastics.

Headworks

The beginning of the treatment plant where the influent begins treatment.

Industrial Ecology

Industrial Ecology (IE) focuses on combining perpetually desirable outcomes in environment, economy and technology sustainably. The primary tenet is that all systems mimic nature and are thus closed loop, continuous, circular. In wastewater treatment industrial ecology would mean that all so called "waste" is re-input into the same or other process. For example, biosolids as fertilizer can be considered a use of sludge consistent with industrial ecology. Recycling wastewater into the treatment plant, manufacturing or other process is another example.

Industrial Wastewater Treatment

Wastewater treatment for industries such as manufacturing, food processing, corrugators, printing and so on. Paper and pulp mills' treatment of wastewater is an example of industrial wastewater treatment. Municipal wastewater treatment would be an example not considered to be industrial.

Influent

The untreated wastewater or raw sewage coming into a wastewater treatment plant.

Influent Screens

Screens used to remove large inorganic solids from the waste stream.

Innovative and Alternative (I&A)

An EPA term for wastewater treatment systems that reuse all or part of the wastewater.

Liquid Solids Separation

The process of separating the liquids and solids in a given wastewater. Liquid/solids separation comes in one of 3 processes:

1. If the solids sink (specific gravity greater than 1) use a clarifier
2. If the solids float (specific gravity less than 1) use a floatation unit (DAF)
3. If neither sink or float (specific gravity is 1) try using a screen (rotary or parabolic)

MGD

Million Gallons per Day - 694.4 gallons per minute.

Modified Permit, Waiver

EPA variances or waivers granted.

N: Nitrogen

The measure of nitrogen usually as ammonia and nitrate present in various wastewaters.

Natural Systems

Wastewater treatment systems usually biological with a minimum of mechanical components or processes, for example, constructed wetlands.

Onsite

Wastewater treatment at the point of production typically associated with residential systems such as septic tanks. Onsite treatment plants are also common in hotels, schools, small communities and manufacturing plants. Onsite treatment can reduce the costs of concentrating wastewaters into one huge treatment plant.

Overland Flow Land Treatment

Grassy slopes used to treat wastewater. Leftover water is captured at the bottom.

pH

A measure of acidity or alkalinity of water, or any given substance. The scale is 1 to 14 with 7 being neutral. Over 7 is alkaline or caustic, under 7 is acid or base.

P: Phosphorus

The measure of Phosphorus present in wastewater.

Primary Wastewater Treatment

The first process usually associated with municipal wastewater treatment to remove the large inorganic solids and settle out sand and grit.

Raw Sewage

Untreated sanitary wastewater.

Reclaimed Water

Reusable wastewater from wastewater treatment such as tertiary treatment of wastewater in biological and other systems.

Run Off

Storm flows that aren't absorbed and flow off the land and streets.

Sanitary Wastewater (domestic)

Wastewater from human domestic water use.

Scum

Usually fatty material in wastewater that floats.

Secondary Wastewater Treatment

Second biological process of digestion with bacteria.

Sewage (or wastewater)

The used water and added waste of a community which is carried away by drains and sewers.

Sewerage

A system of sewers; the removal of waste materials by means of a sewer system.

Sludge

The solid waste material which settles out in the wastewater treatment process, sometimes biosolids. Can be dewatered and reused or disposed.

Sludge Dewatering

Removing the remaining water from sludge for reuse and to lighten the sludge for reuse or disposal.

Storm Water Run-Off (SRO)

The pulse of surface water following a rainstorm. The water carries sediment, gas, oil, animal feces, glass and other waste from the watershed to receiving waters creating a difficult urban/suburban wastewater problem.

Storm Drain

A pipeline or channel system that carries surface water and/or runoff to public waters, but does not feed into sewer system.

Subsurface Flow Wetland (SF)

A type of constructed wetland in which primarily treated waste flows through deep gravel or other porous substrate planted with wetland vegetation. The water is not exposed to the air, avoiding problems with odor and direct contact.

TDS - Total Dissolved Solids

Total Dissolved Solids (TDS) is the combined total of all dissolved solids in wastewater, both organic and inorganic and very fine, such as colloidal minerals. Generally particles must be smaller than two micrometers to be considered a dissolved solid. For example, salt dissolved in water is a dissolved solid. Therefore TDS will "survive" screening or other coarse filtration.

Tertiary Wastewater Treatment (Advanced)

Biological or chemical polishing of wastewater to remove organics, solids and nutrients. Tertiary wastewater effluent limits are generally 10 mg/1 BOD5 and 10 mg/1 TSS.

Tertiary Treatment

The use of filtration to remove microscopic particles from wastewater that has already been treated to a Secondary Level. Anthracite coal is the filter medium used by the MWWD.

Treatability

How treatable a water sample is with a given substance.

TSS - Total Suspended Solids

As the name implies, the total solid particles that are suspended (as opposed to dissolved) in the wastewater. TSS must be filtered out, flocculated, digested and so on for removal in the treatment of wastewater. Though not necessarily pollutants TSS is considered to be a measure of pollutants in water by the EPA in the US.

Turbidity

A measure of how clear water is in Nephelometric Turbidity Unit (NTU), invisible to the average naked eye until readings in excess of 100 are reached, typically determined by shining light through a sample placed in a turbidimeter.

Ultraviolet Disinfection (UV)

The use of ultraviolet light to kills bacteria and other microorganisms in water and wastewater. Typically a final treatment step.

Wastewater

Wastewater is "used" water, the water leftover after its use in numerous application such as industrial, agricultural, municipal, domestic and on.

NINE SPRINGS PLANT FACILITY MASTER PLAN

Visioning Activity

Madison Metropolitan Sewerage District

TKDA

Right activity/program in the right place?

- No build alternative?
- Workforce Development
  - Does this allow you to do your job more efficiently?
  - Are circulation conflicts addressed?
  - Enough storage?
  - Pros/cons if your work space moves? If it doesn't move?
- Public Trust
  - Is there a clear separation of public vs. plant functions?
  - Do the access points address security strategies?

CIP

CIP ID# A01.4 West Blowers and Switchgear Replacement

Start Date
2022

Completion Date
2026

Project Type
Plant Improvements – Aeration System

Location
Nine Springs Wastewater Treatment Plant

Description
This project will replace the west blowers and associated medium-voltage switchgear. These facilities have been in operation for more than 35 years, and they are currently operating beyond their expected lifespan. This project was included in the 2016 Liquid Processing Facilities Plan. It is anticipated that the costs of the project will be funded through the Clean Water Fund.

Background
The 2016 Liquid Processing Facilities Plan recommended replacement of the west blowers using a phased approach. The plan called for two blowers to be replaced between 2020 and 2025, and the remaining blower and blower switchgear to be replaced shortly after 2024. Since the plan was developed, the condition of the blowers has deteriorated significantly, and one of the units is inoperable and requires costly repairs. Given the condition and criticality of this equipment, District operations staff is recommending that all three blowers and associated switchgear be replaced as soon as possible to ensure that this critical process continues to operate satisfactorily.

CIP ID# A04.1 Heat and Power Improvements

Start Date
2025

Completion Date
2031

Project Type
Energy-Related Projects – Use Reduction/Generation

Location
Nine Springs Wastewater Treatment Plant

Description
The purpose of this project is to identify and replace aging assets associated with the District's energy-producing infrastructure and to optimize the use of energy going forward. These improvements will position the District to use its biogas to generate electricity on site at greater efficiency or to produce a biogas of pipeline quality that can be sold to others. This project was evaluated as part of the 2020 Energy Management Master Plan. Additional facility planning and design phases are expected to precede construction. It is anticipated that all project costs will be financed through a loan from the Clean Water Fund.

Background
An energy study was conducted in 2014 by Strand and Brown and Caldwell to provide a roadmap for how the District might achieve energy independence. Areas of focus included ways to reduce energy usage, improve utilization of digester gas and produce more energy. The 2020 master planning study expanded on all these areas and examined the most energy-efficient way to handle and dispose of biosolids. It is anticipated that the master plan will lead to three major projects going forward: (1) Heat and Power Improvements; (2) Biosolids Processing; and (3) Miscellaneous Energy Projects.

CIP ID# A11 Septage Receiving Modifications

Start Date
2024

Completion Date
2027

Project Type
Plant Improvements – Septage Receiving

Location
Nine Springs Wastewater Treatment Plant

Description
This project will correct problems encountered with operation of the existing septage receiving facility. Work will include reconfiguration of the existing facility to allow improved traffic flow, better screening equipment upstream of the Headworks Facility and implementation of more security and tracking measures to reduce the potential for unauthorized discharges. This project was included in the 2016 Liquid Processing Facilities Plan. It is anticipated that project costs will be funded through the Clean Water Fund.

Background
The septage receiving facility was constructed as part of the Tenth Addition to the treatment plant and has experienced a number of operational difficulties since it was placed into operation. Trucks discharging at the facility have to back up to empty their contents, resulting in congestion during periods of heavy traffic and icy and unsafe conditions in winter. Further, sand and grit accumulate in the discharge trough, which requires manual cleaning by District staff on a frequent basis. Improvements will allow for one-way traffic for haulers and an improved screening system to keep unwanted material out of the screening channel. A space needs study for the treatment plant is planned for 2022-2023, which will help inform the preferred location of the future facility.

Agenda

- Introductions (5 minutes)
- Set the Stage (20 minutes)
  - Review Existing Plans
  - Recap CIP discussion
  - Review Strategic Plan
  - Review Existing Campus Map
- Visioning Activity (55 minutes)
- Tour Logistics (5 minutes)

Introductions

Setting the Stage

Previous Planning Efforts

- List all of their plans…

Recap CIP Discussion

- Addressing multiple scenarios
- Infrastructure projects not included in the CIP

Review Strategic Plan

Our Purpose

Protect public health, welfare and the environment by providing efficient and strategic wastewater management on behalf of our owner communities.

Our Owner Expectations

1. Owners expect the District to protect public health, welfare and the environment.
2. Owners expect the District to provide cost-effective and efficient wastewater treatment.
3. Owners expect the District to be resilient and sustainable in its operations and business practices, so it is meeting the needs of the present without compromising the ability of future generations to meet their own needs.
4. Owners expect the District to comply with regulations and proactively anticipate future regulatory needs.
5. Owners expect the District to be collaborative, fair, responsive and equitable, with all communities having access to safe, clean, affordable wastewater services and share the economic, social and environmental benefits of wastewater systems.

Performance Areas

Adaptation

The District maintains flexibility, reliability, and resilience by addressing major factors that could increase District costs, render District assets obsolete, change the District's role, increase the District's value, or require changes in the District's work, where such factors require extraordinary effort, expense, reorganization, addition of function, or political or collaborative effort.

Financial Sustainability

The District maintains financial sustainability to ensure having adequate monies for District obligations over the long term.

Financial sustainability requires balancing the benefits of spending against financial burdens on communities and individuals.

It further requires that spending be cost-effective and justified, needs can be met without disruption, spending and revenue are smoothed over time, and burdens on communities and individuals are acceptable to them and are equitable.

It finally requires transparency so that those who fund the District can have confidence in the decisions made on their behalf.

Infrastructure Reliability

The District manages its physical and technological infrastructure so that it fulfills its intended functions to an acceptable level of performance at an acceptable level of risk and continues doing so through changes in the service area, climate, and other external conditions.

The District does this by setting standards of performance and risk for District assets, making judicious investments, performing conscientious maintenance, and planning for changing conditions.

Public Trust

The District maintains public trust to support its long-term success through public confidence, support of other governments and institutions, and the social capital needed to operate effectively.

To uphold public trust, the District must be responsive, reliable and fair; it must listen, communicate and engage with openness and transparency; it must not impose inequitable burdens on communities, and it must have integrity in its operation, business practices and relationships with its owner communities and the broader community it serves.

Regulatory Compliance

The District addresses regulatory factors to ensure that we meet existing permit requirements with only minor and infrequent violations, maintain a low risk of significant violations on an ongoing basis, and respond to violations as appropriate to the significance of the violation.

To achieve this, the District monitors and corrects performance against regulatory requirements, maintains effective working relationships with regulators, monitors trends in regulation, makes plans to adjust to regulatory trends, and works to influence regulatory trends to support cost-effective achievement of goals.

Strategy Execution

The District executes its strategy to ensure we are meeting our purpose, we have the people and resources to do the right work at the right time to provide the greatest value, and critical results are obtained when needed.

To accomplish this, we must effectively organize and prioritize work, staff and external resources; give staff clear direction to guide their efforts; engage in effective project management and oversight; and monitor performance indicators to respond to changing needs. This requires active and diligent executive-level monitoring, guidance, and support.

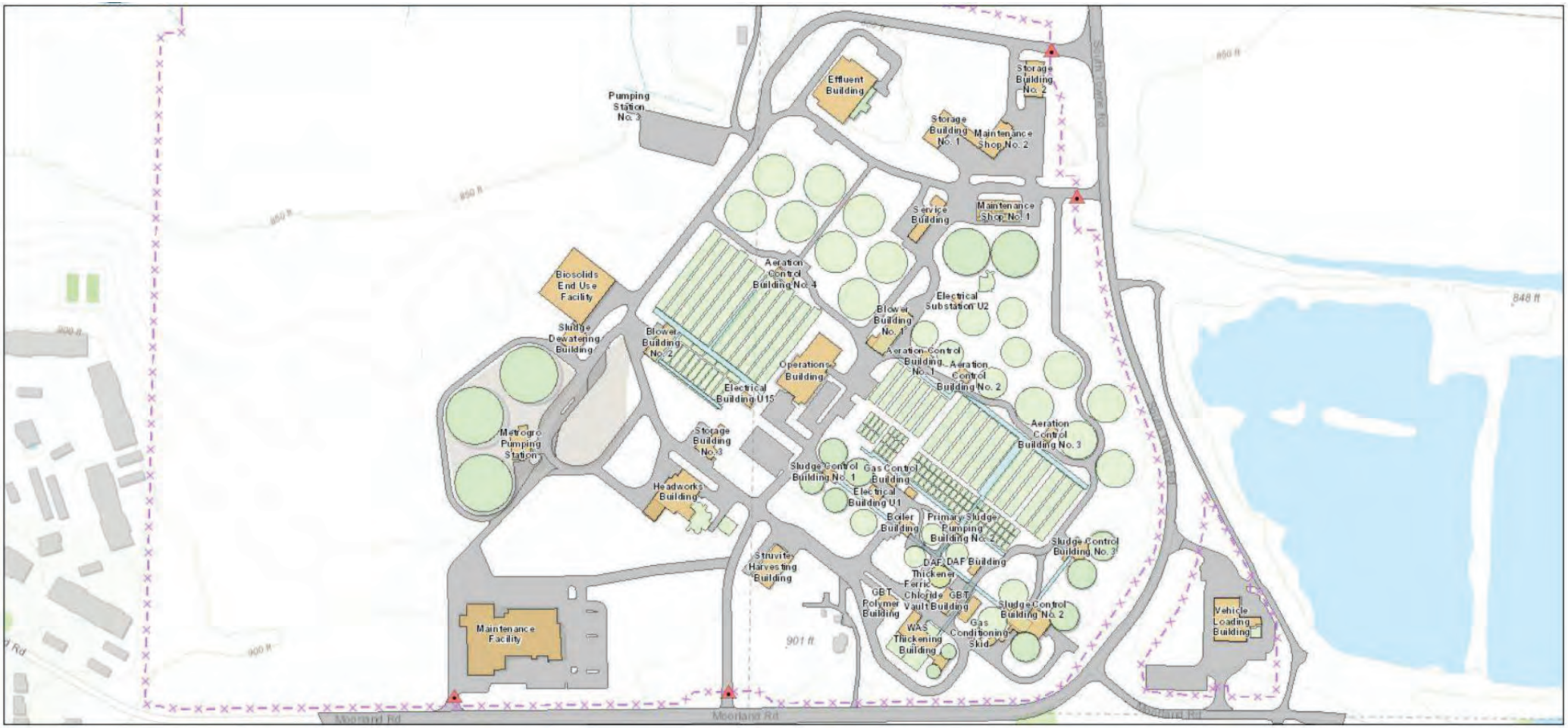
Pumping Station No. 3
Effluent Building
Storage Building No. 2
Storage Building No. 1
Maintenance Shop No. 2
Service Building
Maintenance Shop No. 1
Biosolids End Use Facility
Aeration Control Building No. 4
Electrical Substation U2
Sludge Dewatering Building
Blower Building No. 2
Blower Building No. 1
Aeration Control Building No. 1
Aeration Control Building No. 2
Operations Building
Electrical Building U15
Metrogro Pumping Station
Storage Building No. 3
Aeration Control Building No. 3
Sludge Control Building No. 1
Gas Control Building
Headworks Building
Electrical Building U1
Boiler Building
Primary Sludge Pumping Building No. 2
Sludge Control Building No. 3
Struvite Harvesting Building
DAF Building
DAF Thickener
Ferric Chloride Vault Building
GBT Polymer Building
GBT Building
Sludge Control Building No. 2
Gas Conditioning Skid
WAS Thickening Building
Vehicle Loading Building
Maintenance Facility
850 ft
848 ft
900 ft
901 ft
Moorland Rd

Visioning Activity

Our Purpose

Protect public health, welfare and the environment by providing efficient and strategic wastewater management on behalf of our owner communities.

	To Our Customers Customer Perspective	To Our Internal Processes Internal Perspective	With Our Ability to Innovate Innovation and Learning
What does a successful plan look like?			
What are the critical constraints?			
What are the physical requirements?			

Tour Logistics

Top 3 biggest issues?

MEETING NOTES

To: Attendees

Copies To:

From: Kathleen Anglo

Date: 11.21.2022

Reference: MMSD | Nine Springs Wastewater Treatment Plant

Capital Project Infrastructure Placement Plan – Workshop 01

TKDA Project No. 20279.000

Client No.

On Nov. 15, 2022 at 9:00 am the following team members met at *Nine Springs Wastewater Treatment Plant* to review CIP Projects for consideration for the Capital Project Infrastructure Placement Plan.

MEETING ATTENDEES:

Name	Organization/ Discipline	Email
MMSD Staff:		
Eric Dundee	Project Champion | Dir. Operations and Reliability	ericd@madsewer.org
Seth McClure	PM | Strategic Performance and Policy Advisor	sethm@madsewer.org
Lisa Coleman	Dir. Engineering	lisac@madsewer.org
Alan Grooms	Operations Manager	alang@madsewer.org
Erik Rehr	Maintenance and Reliability Manager	erikr@madsewer.org
Todd Gebert	Capital Planning Engineer	toddg@madsewer.org
Martye Griffin	Dir. Ecosystems Services	marting@madsewer.org
TKDA Staff:		
Kathleen Anglo	PM | Landscape Architect	Kathleen.anglo@tkda.com
Ben Olson	Project Architect	Benjamin.olson@tkda.com
Josh Elder	Architectural Technician	Josh.elder@tkda.com
Dan Nesler	Wastewater Engineer	Daniel.nesler@tkda.com
Amy Patterson	Civil Engineer	Amy.patterson@tkda.com
Jeannine Clancy	Project Advisor | Strategic Communications	Jeannine.clancy@tkda.com
Sam McKinney	Stakeholder Engagement	Samantha.mckinney@tkda.com
Dana Schumacher	Landscape Architect	Dana.schumacher@tkda.com
Brian Dunn	Electrical Engineer	Brian.dunn@tkda.com

The following items were discussed.

Meeting Overview:

- Review of projects included in the CIP (Capital Improvements Plan)
- CAD maps are more up-to-date than GIS (MMSD to send TKDA updated CAD maps)

1. Introductions
2. Existing campus overview

a. Capital Project Infrastructure Placement Plan: vision 10-20 years out due to changes in technology, potential regulatory requirements, or other parameters. Potential for too many changes past 20 years.
b. 50 -year Master Plan: typically only gets updated towards end of 50 year span – last updated in 2009.

3. CIP Projects
   a. A01 Liquid Processing 2
      i. No current new buildings are proposed at this time.
      ii. A01.4 West Lower Blower Building 2: potential expansion
         a) Building had construction issues to review during construction prior to proceeding.
      iii. Look at a better process for screening and protection of screens from damage.

   b. A03 Electrical Service Equipment Replacement - MGAE (Madison Gas and Electric)
      i. MMSD to purchase a backup generator to be placed within the footprint by the substation for operation by MGAE.
      ii. Access to substation
         a) Separate entrance to substation exists, but currently it is accessed through plant.
         b) Prefer if access is separate from plant, but not essential.
   b. A04.1 Heat and Power Improvements
      i. Potential for solar.
      ii. Sludge control #2 engines are 35 years old.
      iii. If biomass is going to continue to be pursued, existing space is too small and new area and engines will be needed. Possible locations: next to boiler building or next to boneyard.
         a) Option changes if chosen to connect to MGAE and connection with pipeline.
   c. A07 Metrogro Applicators and Equipment
      i. Change to a Class A or B cake solid
         a) Will require space for additional centrifuge or composting area
         b) Is compost for general public use or will it be handled through select vendors (implications on access to material). How to keep secure?
         c) If it will be compost material, 1/3 of the mix would need about 3 acres to process.
      ii. Additional space for a 4th tank for Class B liquid has been identified.
      iii. Vehicle Loading Building could use covered storage (applicators are stored in 2 areas on campus) and additional shop space.
   d. A10 Liquid Processing phase 3.
      i. A10.1 Headworks screening: no changes to building needed, upgrades to grates/screens
   e. A11 Septage Receiving Modifications

i. Current system of septage receiving doesn't work well – drive in and back up into trough
ii. Haulers are using Gate 4 and Gate 2 (was Gate 1 previously, but that has been closed due to damage)
iii. About 100-120 vehicles per day (2 haulers).
iv. Would like better options for metering and sampling collection.
v. Meeting with septage haulers will be scheduled.

4. Discuss future CIP projects not in the 6-year window
   a. Review Alternatives for large projects (biosolids, LPI, Heat & Power)
   b. Safety and Security
      i. Gates remain open/unlocked during operation hours
      ii. Deliveries arrive haphazardly and there is a lot of coordination to get drivers/visitors to the right place
      iii. Chemical storage needs to be centralized to a few locations and stored properly.
   c. Storage Buildings
      i. In need of repair (approx. $200k estimate to complete repairs to existing structures)
      i. Inefficient use of time moving from one end of the plant to the other to gather necessary tools and supplies
      ii. They have ghost inventory that is not recognized but is a real inventory
         a) This consists of "Extra" and "Salvaged" items.

The above represents the writer's understanding of the meeting. Any errors, omissions, and/or discrepancies should be reported to him/her promptly.

MEETING NOTES

To: Attendees

Copies To:

From: Kathleen Anglo

Date: 11.21.2022

Reference: MMSD | Nine Springs Wastewater Treatment Plant

Capital Project Infrastructure Placement Plan – Workshop 01

TKDA Project No. 20279.000

Client No.

On Nov. 15, 2022, at 10:15 am the following team members met at *Nine Springs Wastewater Treatment Plant* to review non-CIP Projects and Plant Vision for consideration for the Capital Project Infrastructure Placement Plan.

MEETING ATTENDEES:

Name	Organization/ Discipline	Email
MMSD Staff:		
Eric Dundee	Project Champion | Dir. Operations and Reliability	ericd@madsewer.org
Seth McClure	PM | Strategic Performance and Policy Advisor	sethm@madsewer.org
Michael Mucha	Chief Engineer and Director	michaelm@madsewer.org
Mike Lipski	Human Resources Manager	mikel@madsewer.org
Marcus Canty	Health, Safety, and Security Leader	marcusC@madsewer.org
TKDA Staff:		
Kathleen Anglo	PM | Landscape Architect	Kathleen.anglo@tkda.com
Ben Olson	Project Architect	Benjamin.olson@tkda.com
Josh Elder	Architectural Technician	Josh.elder@tkda.com
Dan Nesler	Wastewater Engineer	Daniel.nesler@tkda.com
Amy Patterson	Civil Engineer	Amy.patterson@tkda.com
Jeannine Clancy	Project Advisor | Strategic Communications	Jeannine.clancy@tkda.com
Sam McKinney	Stakeholder Engagement	Samantha.mckinney@tkda.com
Dana Schumacher	Landscape Architect	Dana.schumacher@tkda.com
Brian Dunn	Electrical Engineer	Brian.dunn@tkda.com

The following items were discussed.

1. Introductions
2. Other Plans to review:
    a. Homeland Security Report: MMSD to provide for review.
    b. Shop One Strategic Plan: MMSD to provide for review.

3. NSWWTP role as critical infrastructure
    a. Flexibility is needed if the future does not materialize as planned in the CIP to change or adjust to meet those alternatives.
    b. TKDA will incorporate various alternatives outlined in previous planning documents and provide space required for whichever alternative may be chosen.
    c. Resilience is looked at as how quickly MMSD can bounce back from an unplanned event.

4. Workforce needs for future growth, planning and adaptability.

5. Visioning Activity

6. Critical Perspectives and Constraints to meeting MMSD purpose.
    a. Customer Perspective/Constraints = Green post-its
    b. Internal Perspective = Purple post-its
    c. Innovation/Learning = Yellow post-its

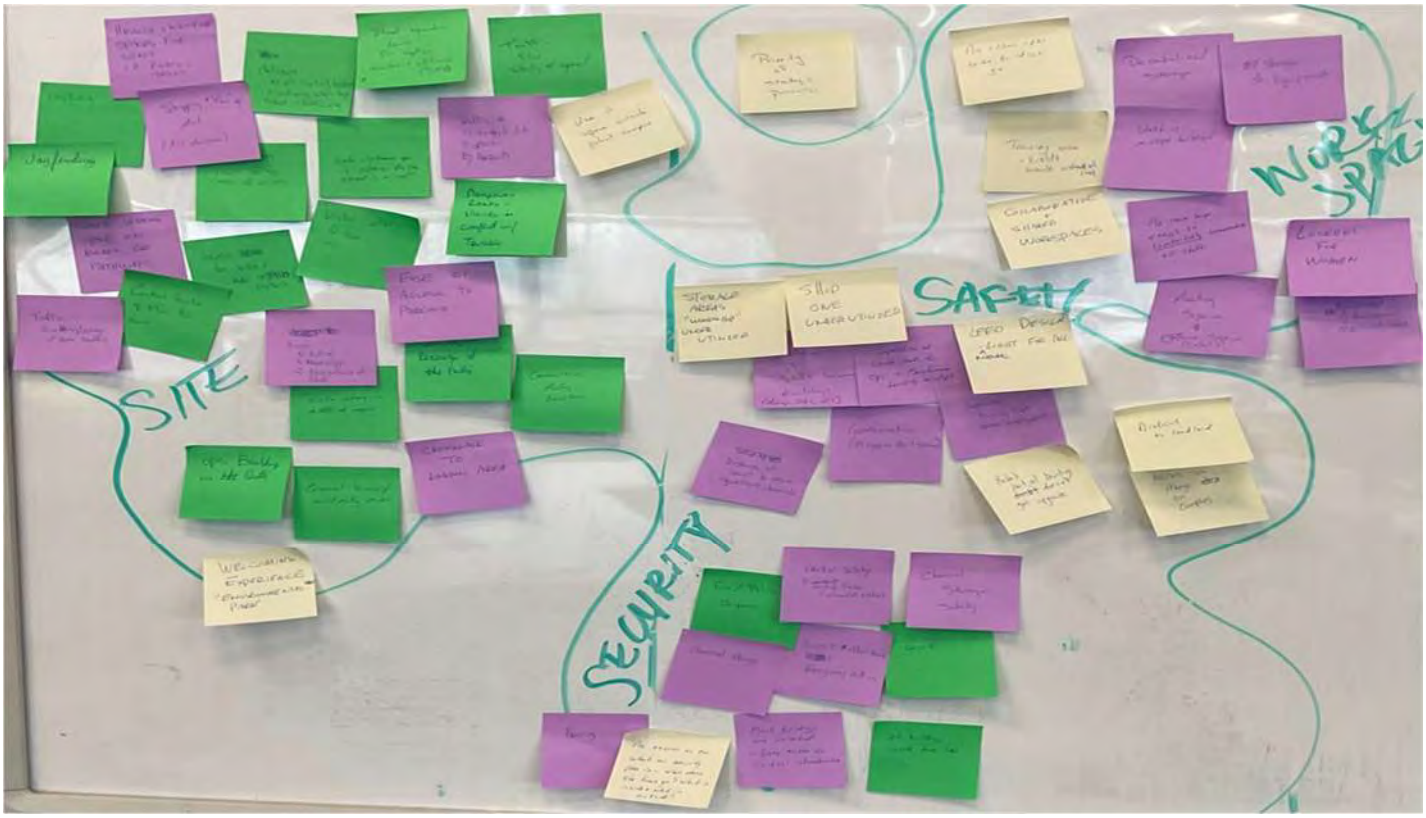

Green Post-its (Customer Perspective):

- Wayfinding
- Septage haulers - where do they go? Ease of access
- Gates with entrances open is confusing - Are they allowed to come in or not?
- Deliveries: no central location
- Deliveries: where do they go?
- Deliveries: dock in high traffic area in Maintenance Facility creates conflicts
- Traffic: speed, flow, and safety
- Plant operations hours may not coincide with septage hauler schedules and deliveries
- Visitor entrance is in the middle of campus
- Where is access for bikes, peds, transit users (Gate 3 is closed @ bus stop)
- Visitor Center: start/stop for tours
- Roads: dangerous, conflicts with trucking, visibility issues
- Central receiving of public
- Central location and flow for tours
- General busing/mail/meeting attendees
- Ops building in the center
- Commission meeting location
- All buildings inside fence line (current condition)
- Fire/police response
- Security

Purple (Internal Perspective):

- Fencing
- Most Buildings are unlocked - easy to access critical infrastructure
- No room large enough to comfortably accommodate all staff
- Staff is in multiple buildings (decentralized)
- Storage of equipment
- Decentralized storage
- Separate building that houses employees
- Lockers for women
- Equipment for women, varied sizes
- Limited meeting space and office space
- Chemical storage safety
- Worker safety - working alone at night or off-hours
- Chemical storage
- Access after-hours and Emergency call-in
- Crosswalk to lagoon area
- Separation of staff leads to Ops vs Maintenance mindset
- Isolation of staff between buildings (Ops vs Maint vs Metrogro)
- Traffic - walking and biking combined with semi traffic
- Ease of access to parking
- Traffic-- through to lab (volunteer drop-off), for operators, hazards

- Access to parking, ADA, navigation of plant
- Communication - PA system upgrades, Emergency Alert system
- Distance of travel to move equipment and chemicals
- Shipping and receiving/mail-- all deliveries
- Health and wellness spaces for staff: outdoor tables, trails, etc
- Safe walking space on roads or separate paths

Yellow (Innovation and Learning):

- Training area: forklift, vehicle areas not on road
- Priority of strategic performance areas
- Collaborate + shared workspaces
- Shop One is underutilized
- Storage area in "wood shop" underutilized
- LEED Design: natural light for all
- No answer as to what the security plan is - where does the fence go? What is inside and what is outside?
- Rehab part of building does not get upgrade?
- District as landlord
- Houses we manage on campus
- No cohesive plan on to where buildings should go
- Welcoming experience "Environmental Park"
- Use of space outside of plant campus

7. OTHER ITEMS (Not included in a Plan or CIP)
    a. Meeting Rooms
        i. Commissioning Meeting Room in Maintenance Building is set up and torn down for each type of meeting that happens in that space. Tailored for each meeting.
        ii. Need to have a better meeting space for plant meetings. The only space big enough right now is the garage.
        iii. No central location for flow of tour groups, public education
    b. Access and Wayfinding
        i. No secured entrance (free flow of vehicles/people in and out of plant)
        ii. No command center
        iii. Haulers, vendors, delivery drivers, and visitors have a challenging time knowing where to go.
        iv. Only one address for the entire plant. How do emergency vehicles know where to go?
        v. Fog – happens regularly and affects visibility, safety
        vi. No crosswalk to lagoon area
        vii. Most buildings are unlocked. Only the operators have badge access.
        viii. General circulation
            1. Roads are narrow and large semis pass each other regularly
            2. Blind spots!
            3. Speed can be a concern
            4. Where do peds/bikes go?
        ix. Gate 1: closed due to damage
        x. **Gate 2:** major entry point for staff, visitors, vendors, haulers, MG&E access, and deliveries.
        xi. Gate 3: closed once Gate 4 was installed with Maintenance Facility

xii. **Gate 4:** major entry point for staff, visitors, vendors, haulers, Metrogro, and deliveries.
    1. The majority of hauler and delivery traffic enters the plant here.
    2. Traffic gets stopped and backed up when a delivery truck backs up to the dock at the Maintenance Facility.

xiii. Additional access for residential house – sometimes left open

c. Metrogro
    i. Staff tend to be isolated and left out of discussions or meetings.
    ii. They are part of the maintenance group.
    iii. This is partially due to Metrogro being across the street.

d. Personal Storage/Wellness
    i. Lack of lockers, some of the female staff have given theirs up for other females to use.
    ii. Maintenance Building: 54 male lockers, 6 female lockers
    iii. Field operators/ workers get two lockers.
    iv. Wellness room at the Maintenance Facility, low-key workout space in Ops bldg. (dungeon-like space)

e. Plant Storage
    i. Chemicals stored through-out, sometime in not ideal locations
    ii. Storage is spread through-out, inefficient use of time moving about the plant to find things
    iii. “ghost” inventory: storage of items not essential to plant function, not inventoried stock
    iv. Need for a chemical room where deliveries can be done close by

f. Communication system
    i. The system is outdated and does not reach all areas. after hours call-in is unsafe

g. Sustainability
    i. Buildings on campus to be LEED certified moving forward.
    ii. Need to be efficient with use of space.

h. Training Facilities
    i. Need a space for confined space training, operations, and plant process training

i. Operations Building
    i. First floor recently remodeled, ADA upgrades from parking lot to first floor
    ii. ADA access in basement isn’t ideal
    iii. Only 2 female lockers

j. Shop One
    i. Abundance of underutilized space.
    ii. Updated community room, remaining space has been mothballed.
    iii. Programming and event management
    iv. Not ADA accessible

k. Security
    i. What is inside/ what is outside the fence?
    ii. Consider removal of non-essential plant activities (residential uses, public education)

l. Three things to think about during plant tour:
    i. Shop One
    ii. Headworks (hauler circulation)
    iii. Operations (nerve center of campus)
    iv. We are not set up for tours

MEETING NOTES

To: Attendees

Copies To:

From: Kathleen Anglo

Date: 11.21.2022

Reference: MMSD | Nine Springs Wastewater Treatment Plant

Capital Project Infrastructure Placement Plan – Workshop 01, Mtg 03

TKDA Project No. 20279.000

Client No.

On Nov. 16, 2022 at 8:30 am the following team members met at *Nine Springs Wastewater Treatment Plant* to review Communications/RT/Ecosystem Service needs for consideration for the Capital Project Infrastructure Placement Plan.

MEETING ATTENDEES:

Name	Organization/ Discipline	Email
MMSD Staff:		
Eric Dundee	Project Champion | Dir. Operations and Reliability	ericd@madsewer.org
Seth McClure	PM | Strategic Performance and Policy Advisor	sethm@madsewer.org
Janelle Werner	Executive Coordinator	janellew@madsewer.org
Kathy Lake	Pollution Prevention Manager	kathyl@madsewer.org
Amanda Wegner	Communications and Public Affairs Manager	amandaw@madsewer.org
Martye Griffin	Dir. Ecosystem Services	marting@madsewer.org
TKDA Staff:		
Kathleen Anglo	PM | Landscape Architect	Kathleen.anglo@tkda.com
Ben Olson	Project Architect	Benjamin.olson@tkda.com
Josh Elder	Architectural Technician	Josh.elder@tkda.com
Dan Nesler	Wastewater Engineer	Daniel.nesler@tkda.com
Amy Patterson	Civil Engineer	Amy.patterson@tkda.com
Jeannine Clancy	Project Advisor | Strategic Communications	Jeannine.clancy@tkda.com
Sam McKinney	Stakeholder Engagement	Samantha.mckinney@tkda.com
Dana Schumacher	Landscape Architect	Dana.schumacher@tkda.com
Brian Dunn	Electrical Engineer	Brian.dunn@tkda.com

The following items were discussed.

1. Introductions
2. Work group location
    a. Operations building: Business Services 1st floor, Pollution Prevention 2nd floor.

3. Pollution Prevention
    a. Shop One: give tours, education, community events, etc.
    b. Ecosystems department includes lab and Pollution Prevention.
    c. Metrogro is partially under this group.
    d. Education = community engagement.

   e. Samples collected in the lab are primarily by volunteers. Approx. 30 volunteers along with rotating researchers
   f. Sample drop- off location is in the Operation building for lab.
   g. Hauled waste is in multiple locations and some are outside the fence.
   h. Pretreat and waste coordinator handles most of the hauled waste drop-off around campus.

4. Business Services and Communications
   a. Large Meeting room, Shop One and Maintenance Facility garage are for used meeting spaces.
   b. This team is the hub when people need to know what is going on around campus and is done out of the operations building
   c. Admin. Guidelines for security measures? Seth will release to TKDA.
   d. They are super- users that understand how meeting spaces work.
   e. Maintenance Facility building and Shop One meeting rooms need to be ready to receive the public.
   f. Connection locations within meeting rooms don't work as well as should for functionality.

5. These two teams serve as "marketing" for the District and each have a lot of inventory and storage needs. There are items for display that go off-site and can use alternate storage location.

6. Location of personal and user groups are important.

7. Site location within the plant is not as important to where the user group is, but to be together.

8. Maintenance and operations are too far separated and engagement between the two divisions is preferred. Currently the campus has two hubs, not one.

9. Site navigation is a challenge. No street names and no wayfinding signage.
   a. Delivery location is confusing. RFP's are an issue for bidding when delivered to different locations.
   b. Business Services gets call for help to navigate users, but staff can't leave the Ops desk.
10. Would like to move Ped. and Bike traffic off the roadways.
   a. Look at walking loops that consider tour routes.
   b. MMSD will pass along tour routes to TKDA.

11. Business service has concerns RE: enough space to house staff. The team is a hub and would like to have team located in same building. Review job roles/responsibilities.
12. Security:
   a. Some buildings have keys and others have card access.
   b. One person is security for Business Service.
   c. Some staff may be uncomfortable in a Security role or when working alone.
   d. Many are people out on work orders through the day and very few are around campus.
   e. Cell service doesn't work well in tunnels.
   f. If a security guard shack is proposed, then consider the vehicle queueing space needed for haulers and deliveries off the main road.
13. There are now multiple workflows in place for the hybrid workforce, this can make some work responsibilities challenging.

14. Large event space and space for tours are a needed along with a welcoming front door to the plant.
   a. Things have changed to educate the community regarding the plant processes vs. staying hidden.
   b. School tours may have up to 200 kids at one Time. Many times it's just a class of 20-30.
   c. Small group tours happen regularly.
   d. School buses pull-in and drop-off students at Shop One. (where should they park?)

   e. They identify or ask for volunteers for tour specific types. Ideal would be to start and end at Shop One. Plant is not set up for a fully accessible tour. Currently the start point of a tour can change due to type of tour.

15. Key focus across campus is to get to a “we” and not so much as an “us and them”.

16. Meeting space, multipurpose room on first floor of operations building is the one space to use currently.
    a. Could use more meeting rooms like this, with up-to-date A/V equipment. Current sound quality in this room is poor.
    b. However sound quality from this room is poor.

17. Current work environment is not ideal for Business Services because they are a hub and they provide support to the district.
    a. They are on the phone most of the day.
    b. Need more space for future growth.
    c. HVAC needs improvements in current areas.
    d. Office supplies and back office items are scattered and should to be centralized.

The above represents the writer’s understanding of the meeting. Any errors, omission, and/or discrepancies should be reported to him/her promptly.

XXX:xxx
Document2

MEETING NOTES

To: Attendees

Copies To:

From: Kathleen Anglo

Date: 11.21.2022

Reference: MMSD | Nine Springs Wastewater Treatment Plant

Capital Project Infrastructure Placement Plan – Workshop 01, Mtg 04

TKDA Project No. 20279.000

Client No.

On Nov. 16, 2022 at 10:30am the following team members met at *Nine Springs Wastewater Treatment Plant* to review Operations/IT/Engineering needs for consideration for the Capital Project Infrastructure Placement Plan.

MEETING ATTENDEES:

Name	Organization/ Discipline	Email
MMSD Staff:		
Eric Dundee	Project Champion | Dir. Operations and Reliability	ericd@madsewer.org
Seth McClure	PM | Strategic Performance and Policy Advisor	sethm@madsewer.org
Alan Grooms	Operations Manager	alang@madsewer.org
Michelle Stranksy	Purchasing and Inventory Assistant	michelles@madsewer.org
Lisa Coleman	Director of Engineering	lisac@madsewer.org
Brady Lessner	Facility Maintenance Supervisor	bradyl@madsewer.org
Mickey Bowman	Network Administrator (IT)	michaelb@madsewer.org
Ben Seibel	Network Administrator (IT)	bense@madsewer.org
Matt Schuman	Reliability Process Manager	matthews@madsewer.org
TKDA Staff:		
Kathleen Anglo	PM | Landscape Architect	Kathleen.anglo@tkda.com
Ben Olson	Project Architect	Benjamin.olson@tkda.com
Josh Elder	Architectural Technician	Josh.elder@tkda.com
Dan Nesler	Wastewater Engineer	Daniel.nesler@tkda.com
Amy Patterson	Civil Engineer	Amy.patterson@tkda.com
Jeannine Clancy	Project Advisor | Strategic Communications	Jeannine.clancy@tkda.com
Sam McKinney	Stakeholder Engagement	Samantha.mckinney@tkda.com
Dana Schumacher	Landscape Architect	Dana.schumacher@tkda.com
Brian Dunn	Electrical Engineer	Brian.dunn@tkda.com

The following items were discussed.

1. Introductions
2. IT and Programming (Ben and Mickey)
    a. Our strength is our people, long-term employees
    b. Data Centers in operations building and at Metrogro.
    c. Have switches in 20 additional buildings across campus.

   d. Two separate networks: “operation and control” and then everything else.
   e. Responsible for A/V setup in meeting rooms.
   f. Prefer offices over cubes, but do not mind break out areas.
   g. Currently they are not close to others for collaboration with other departments.
   h. Lack storage areas.
   i. Most work/people connection between operations and maintenance Buildings.
   j. Dedicated UPS and back-up generator.
   k. Lack fire suppression.

3. Engineering (Lisa)
   a. Located in Operations Building.
   b. Prefer offices for space needs and closets for items in the field.
   c. Personnel are on construction sites or in offices. In the field during warmer months and in the office during colder months.
   d. No expansion space available for additional staff.
   e. The current office size is sufficient; cube spaces are small.
   f. The engineers prefer to be isolated, have quiet space to work out complex problems. Offices with doors preferred.

4. Planning/purchasing does inventory management across the district (Michelle)
   a. Manages deliveries and does the work orders.
   b. Currently inventory is spread across the plant, at the Maintenance Facility (SW corner) and in the storage areas in the NE corner.
   c. All work order picks are done on paper, not electronic. Automated would be good.
   d. Preference is to have inventory at one location on campus, at one level and accessible.
   e. Freight dock in the Maintenance Facility is too small (inside) for unloading/stacking purposes.
   f. Concerns about delivery locations and inconsistent security measures throughout the plant.

5. Operations (Alan)
   a. Works with IT and programming.
   b. Coordinates with Engineering and small project needs.
   c. Good central work area in new Maintenance Facility (open worktables), but space is limited for expansion.
   d. Want to have better access for tool locations to do the job near the location of primary use, but not to be as visible. However, it needs to be identified for location.
   e. Need a better system for storage of large bulk bag items and chemicals that cannot be out in the elements. Storage space is insufficient. Struvite pallets and bags are tucked in multiple locations.
   f. The layout of campus is inefficient, and roadways are narrow.

6. Facilities maintenance (Brady)
   a. Roles include domestic plumbing, small engine, small internal construction, ground keeping at campus and 18 lift stations.
   b. Those are served by the storage buildings and areas scattered.
   c. Strengths of the department are the crew members themselves.
   d. Planning and scheduling for items needed to complete a job is poor. Again, items are still scattered and not in one spot to grab to complete the job and it would be ideal.
   e. In process orders use WAM scheduler for CMS.
   f. Regarding efficiency they are supplying redundant tools from two separate locations and not a central location, which is what would be preferred. The second option would be purchasing items in one location and campus storage into one location.
   g. Mechanics perform daily fleet vehicle maintenance in Storage 2 building.

7. General Concerns

a. Access/Circulation
    i. Would like to see a separate entrance for haulers and staff/visitors.
    ii. Gate 3 has a bus stop but is closed due to new Gate 4.
    iii. Haulers liked entering through Gate 3 due to drivability and of lack congestion to various locations.
    iv. Concerns about delivery locations and inconsistent security measures throughout the plant.
    v. Need wayfinding.
    vi. Additional storage for inventory should be located near Maintenance Facility Building-off Gate 3 for convenient delivery access.
    vii. Provide more car charging locations, even if it must be paid for by the employee.

b. Operations Building
    i. Like the operations break room, lack of meeting room spaces.
    ii. Would like to see a few personal phone rooms for those that work in cubes and need to take a private call.
    iii. Like having lockers and showers places to clean up. Lockers are running out in operations building for both genders.
    iv. More would use workout if in a more inviting location and space.

c. Maintenance Facility Building
    i. Appreciate that staff have their own workstation.
    ii. Good breakroom.
    iii. Need a large meeting space for all-staff meetings, currently using the truck bay garage.
    iv. The building is to last 50 years and is running out of workstations, lockers, storage, and garage space.

The above represents the writer's understanding of the meeting. Any errors, omission, and/or discrepancies should be reported to him/her promptly.

JE: kwa

MEETING NOTES

To: Attendees

Copies To:

From: Kathleen Anglo

Date: 11.21.2022

Reference: MMSD | Nine Springs Wastewater Treatment Plant

Capital Project Infrastructure Placement Plan – Workshop 01, Mtg 04

TKDA Project No. 20279.000

Client No.

On Nov. 16, 2022 at 10:30am the following team members met at *Nine Springs Wastewater Treatment Plant* to review Operations/IT/Engineering needs for consideration for the Capital Project Infrastructure Placement Plan.

MEETING ATTENDEES:

Name	Organization/ Discipline	Email
MMSD Staff:		
Eric Dundee	Project Champion | Dir. Operations and Reliability	ericd@madsewer.org
Seth McClure	PM | Strategic Performance and Policy Advisor	sethm@madsewer.org
Erik Rehr	Maintenance and Reliability Manager	erikr@madsewer.org
Amy Bublitz	Records Program Administrator	amyb@madsewer.org
Martye Griffin	Ecosystem Services	marting@madsewer.org
Matt Seib	Process and Research Engineer	matts@madsewer.org
Josh LeMoine	Chemist	joshl@madsewer.org
Nathaniel Heiden	Operator	nathanielh@madsewer.org
Carol Mielke	Lab Manager	carolm@madsewer.org
TKDA Staff:		
Kathleen Anglo	PM | Landscape Architect	Kathleen.anglo@tkda.com
Ben Olson	Project Architect	Benjamin.olson@tkda.com
Josh Elder	Architectural Technician	Josh.elder@tkda.com
Dan Nesler	Wastewater Engineer	Daniel.nesler@tkda.com
Amy Patterson	Civil Engineer	Amy.patterson@tkda.com
Jeannine Clancy	Project Advisor | Strategic Communications	Jeannine.clancy@tkda.com
Sam McKinney	Stakeholder Engagement	Samantha.mckinney@tkda.com
Dana Schumacher	Landscape Architect	Dana.schumacher@tkda.com
Brian Dunn	Electrical Engineer	Brian.dunn@tkda.com

The following items were discussed.

1. Introductions
2. Process Operations
    a. Campus is not laid out well to go from one process to the next.
    b. Sludge processing (MetroGro) utilizes two locations, could be consolidated into one.
    c. Look at alternate locations for hauling, not in the best location now. Limited loading capabilities.

3. Records
    a. Record locations are in multiple locations and challenging to keep track.
    b. Consolidation would be good.
    c. Many do not know some exist.
    d. Should archive process be changed from paper to digital?

4. Maintenance
    a. Maintenance Facility Building is too small, no charging facilities.
    b. Inventory is scattered across campus and could be consolidated.
    c. Lack of garage storage that is protected, covered.
    d. Would like to have equipment in one area along with mechanics.

5. Lab
    a. The current space on the first floor of operations is sufficient.
    b. Limited expansion capability if additional lab space is needed due to district or regulatory requirements in the future.
    c. The lab could have better ventilation and air flow.
    d. Limited hood space.
    e. Lab workers are on top of each other during the summer (summer interns)
    f. Lost walk-in incubator in remodel. Now have a stand-alone incubator that is loud (located outside of Lab Manager's office)
    g. Locating items to lab storage is challenging.
    h. The lab should NOT be near the cafeteria. What if we drop/spill chemicals while walking through?
    i. Prefer private offices

6. Visitors/Tours
    a. There is not one good tour route over the campus, tours should be more consistent.
    b. The current lab is not set up for tours.
    c. Shop One is a challenge to receive tour groups as it is now.

7. Operations Building
    a. Should this be moved? Towards the perimeter.
    b. Limit access to the heart of the plant both for employees, visitors, haulers, etc.
    c. Move people spaces to edges of campus (public vs. private functions)
    d. Operations building removed, could provide location for heat and power improvement project in lieu of by head works area.
    e. Operations are on site 80% of the time.
        i. Operations and Engineering prefer private working areas, but they do not necessarily need to be dedicated spaces for each staff member.
    f. Building Spaces could be better utilized across campus for employee and business usage.

8. Access/Circulation
    a. Campus has Wayfinding and parking issues.
    b. Move septic hauling and receiving to the outer limits of campus.
    c. Connect the tunnels for easier access across campus, especially in the colder months.
        i. Reference to Green Bay being all underground.
    d. Physical space is limited for expansion.
    e. Safety access is a concern to rooms, bldgs., and the overall campus.
    f. Accessibility complacency has limited movement of groups to other locations on campus.

9. Storage
    a. Do not have adequate facilities to store all chemicals.

b. Location of storage isn't as important as having the physical indoor space required.
c. Delivery location depends on the chemical being delivered.
d. Need more storage in Struvite Harvesting Building.
e. Need a space for lubricant storage on site.
    i. Currently placed in old Headworks bldg (Storage Building No. 3)

10. Maintenance Facility Building
    a. Would like expanded office space for technicians and common work areas.
    b. Need a larger space for all plant staff meetings or events (80 -100+ people)
        i. Community use.

11. General Plant Process Expansion
    a. Any process expansion should follow the topography for gravity flow through process (to the west). Wetlands will be an issue.
    b. Septage receiving building is in a bad place. Too much traffic. Move to the outer edge.
    c. Biosolids End Use facility and Metrogro could move to the outer edge, too.
    d. Chemical storage – proximity is not important but it would be nice to have it all in one place.

The above represents the writer's understanding of the meeting. Any errors, omission, and/or discrepancies should be reported to him/her promptly.

JE: kwa

MEETING NOTES

To: Attendees

Copies To:

From: Kathleen Anglo

Date: 12.02.2022

Reference: MMSD | Nine Springs Wastewater Treatment Plant

Capital Project Infrastructure Placement Plan – Septage Receiving

TKDA Project No. 20279.000

Client No.

On Dec. 02, 2022 at 8:00 am the following team members met via Teams to review existing Septage Receiving operations for the Capital Project Infrastructure Placement Plan.

MEETING ATTENDEES:

Name	Organization/ Discipline	Email
MMSD Staff:		
Eric Dundee	Project Champion | Dir. Operations and Reliability	ericd@madsewer.org
Seth McClure	PM | Strategic Performance and Policy Advisor	sethm@madsewer.org
Julie Maas		juliem@madsewer.org
Martye Griffin	Dir. Ecosystems Services	marting@madsewer.org
TKDA Staff:		
Kathleen Anglo	PM | Landscape Architect	Kathleen.anglo@tkda.com
Ben Olson	Project Architect	Benjamin.olson@tkda.com
Amy Patterson	Civil Engineer	Amy.patterson@tkda.com
Jeannine Clancy	Project Advisor | Strategic Communications	Jeannine.clancy@tkda.com
A-1 Sewer Service:		
Lisa & Jim Thompson	Owners	A1sewerservice15@yahoo.com

The following items were discussed.

1. Background Information (O&M group): Eric
   a. Looking at the best location for septage receiving in the future.

2. Circulation/Use:
   a. Typical size, style, and number of trucks a day
      i. A-1 Haulers, 5 trucks daily (6-7 x/day) looking at around 60 trucks/day (2x includes Honeywagon)
      ii. Not expected to grow operations within the next year
      iii. Honey-Wagon (not in attendance @ meeting)
      iv. Two different types of trucks. 90% of A-1 trucks dispose out of the back

v. Tractor-trailer also dispose off the back end
vi. Different sizes of hoses for discharging (3", 4", 6")
vii. Largest truck is 7,000 gal. (different hauler)
viii. Trying to get away from the RV deliveries
    1. Haulers are getting calls from RV owners to come out and pump the RV for them
ix. Portable toilets can be discharged at the receiving area: issues with dump angles over the trench wall

b. Ingress and egress to the plant site (see markup on map)
    i. Typically enter/exit through Gate 1, conflicts with Metrogro @NW corner of site
    ii. Tight roadways, sometimes must pull off to let other trucks pass
    iii. Blind spots
    iv. Currently: Enter through Gate 4 and leave through Gate 2 (typically leave through Gate 1, but it's closed)

3. Operation Hours:
    a. Haulers work around each other
    b. A-1 works earlier in the mornings and others work later into the evening
    c. Weather and staffing affect arrival/delivery times
    d. Not a lot of waiting time (20 minutes, if 4-5 trucks are in front of you)
    e. 4-4:30 am arrival (A-1), other haulers show up later in the evening
    f. Emergency calls on weekends

   g. Established operating hours: 6am -6pm M-F, gates are closed on the weekends, but staff will come and open gates
   h. Plant will try to be as accommodating as possible: Gates open at 5am
4. Permits
   a. MMSD issues permits to haulers, establishes T&Cs on receiving waste, drivers, etc. Renewed once/year
   b. Only haulers who have a permit can bring waste to site

5. Delivery Area:
   a. Staging/queueing area: stage to the north of the dock
   b. Operations would like 3 bays (Eric)- in case 1 went down then 2 are still operational
   c. Grease can get mixed in with the septic waste and get trapped in the trench, more slope would be good
   d. Heated slabs to prevent freezing
   e. All flow goes to screens by gravity currently from the receiving trough
   f. Wall around trench can become a problem for haulers, based on dump angles (Jim has been hauling for 34 years)
      a. Hoses can get kinked
   g. Need to get portable toilet trucks to a separate spot, it's a tangled mess of hose
      a. They use a 3" hose, they leave a MESS
      b. Hoses and clean-up freezes and it becomes a safety issue
   h. Different area for catch-basin waste (sumps from a Vactor truck) is preferred so grit and larger debris does not get caught in the grease and to protect the screens
   . Lighting is good.
   a. The ramp is good, although it could be an even greater slope to help with emptying the trucks

6. Sampling:
   a. A-1 is fine with current sampling system
   b. Take a sample, leave it in the room with a fridge in the Headworks building

7. Amenities:
   a. Heated floor or ramp is preferred due to icy conditions in the winter when hosing down equipment
   b. Access to a restroom is a nice-to-have, handwashing station is required
   c. Hoses for clean-up is a must (although it gets icy in the winter)
   d. Inside a drive-thru building?
      1. 60 trucks/day - maintenance on overhead doors may be an issue if it's inside a building, but the heated space would be a nice-to-have
8. Misc Discussion
   a. Wildlife/birds in canopies - protected species/nesting times
      1. Solid canopies where the birds can't nest
   b. Two locations in the past 34 years, each location has only had 2 bays
   c. Prescreening
      1. Rock traps for grit and large debris
      2. Screen 4 gets beat up
      3. Equalized flow

d. Schedule for implementation: Design of liquid processing phase 3 is at least 3 years out (Jim and Lisa may be retired?)

The above represents the writer's understanding of the meeting. Any errors, omission, and/or discrepancies should be reported to him/her promptly.

MEETING NOTES

To: Attendees

Copies To:

From: Kathleen Anglo

Date: 12.14.2022

Reference: MMSD | Nine Springs Wastewater Treatment Plant

Capital Project Infrastructure Placement Plan – Metrogro

TKDA Project No. 20279.000

Client No.

On Dec. 08, 2022 at 1:00 pm the following team members met via Teams to review existing Metrogro operations for the Capital Project Infrastructure Placement Plan.

MEETING ATTENDEES:

Name	Organization/ Discipline	Email
MMSD Staff:		
Eric Dundee	Project Champion | Dir. Operations and Reliability	ericd@madsewer.org
Seth McClure	PM | Strategic Performance and Policy Advisor	sethm@madsewer.org
Zac Thompson	Metrogro	zacT@madsewer.org
Chad Liddicoat	Metrogro	chadL@madsewer.org
Ross Hollfelder	Metrogro	rossh@madsewer.org
TKDA Staff:		
Kathleen Anglo	PM | Landscape Architect	Kathleen.anglo@tkda.com
Amy Patterson	Civil Engineer	Amy.patterson@tkda.com
Jeannine Clancy	Project Advisor | Strategic Communications	Jeannine.clancy@tkda.com

The following items were discussed.

Notes

1. **Introductions**

2. **Project Intro - Eric**
   a. About putting the puzzle pieces together (Plan and CIP recommendations aligned with efficient plant site design)
      i. Heat and power
      ii. Septage receiving/ headworks
      iii. Storage buildings (equipment, VLB)

3. **Metrogro 101**
   a. Vehicles:
      i. Applicators (8): Oxbo 5105 (36'L x 10'-5"W x 12'H) (3) and Ag-Chem (5)

ii. Semi-tractor (6): Ford (4) and International (2)
iii. Tanker Trailers (17): Brenner (3), STE (6), Presvac (2) and IME (6)
iv. Nurse Tanks (4)
v. 12' Trailer with a water tank
vi. Future Fleet?
    1. Additional trailer in 2023
    2. Additional applicator toolbar in 2023

b. New applicator machines can load off a semi
c. In the off- season the nurse trailers are stored in the vehicle loading building (Metrogo VLB) parking lot. Nurse tanks are custom.
d. Nurse tank trailers can hold 2 semi-trailer loads (wide, tall and long) –
e. Mechanic trucks (2) fitted with fuel tanks + parts
f. Pick-up trucks (3)

2. **Months/Days/Hours of Operations:**
    a. All 17 semis come to VLB in the am, get orders and then either load at VLB or Metrogro pump station
    b. Loading:

i. Season (dependent on weather): April 5-10th thru first week in June, summer, then again late July - freeze-up (Thanksgiving)
ii. Hours: 6am - 6/6:30p (last load out at 6:30p)
iii. Days of Week: Haul 7 days/week in spring
    1. Summer: 5 days
    2. Falls: 7 days
    3. Will work weekends if it's wet during the week
    4. Can modify to later times if needed, but not desired
iv. Loading sites: 2 at VLB, 2 at Metrogro pump station (see below 3.)

c. Contractors: 17 contractors @ 10-12 trips per day per contractor = 170-204 trips daily
    i. Time between loads (vehicles stay within 30 miles of the plant) 45 minutes is a short round, 1.5 hours for a longer round

d. 4 maximum applications sites at a time
    i. If running 4 sites, each site uses their own trailer load out location (see 2.b.iv.)

3. **Loading Locations**

a. VLB
    i. 2 loading sites (inside building)
    ii. Vacuum loading only
    iii. Only 8 trailers (pressure vac) can only load at VLB due to type of loading (suction to load-no pumping)
    iv. VLB Door: 14' wide x 12' high door (it's a tight fit)

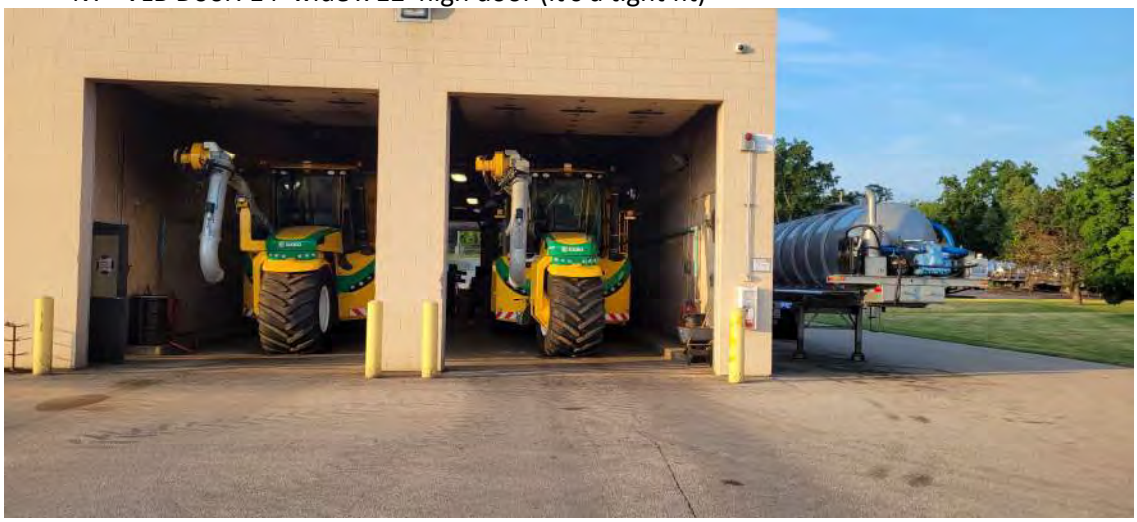

    v. Video: https://youtu.be/wS2c6cvyWGM
    vi. VLB Bay: 43' long
    vii. The median in the drive aisles are difficult for the large trucks and equipment to maneuver around
    viii. Trucks often block the bike path and bicyclists are hard to see

b. Metrogro (within plant site)
    i. 2 loading sites
    ii. All trucks can load here

iii. During colder months, have to heat piping and values with torches to use loading stations
iv. IDEAL if all loading was like this location (but inside like VLB)
v. Biosolids Management Plan shows two additional loading stations at this location

4. **Storage**
   a. General:
      i. Metrogro has no storage
      ii. VLB has limited storage
      iii. Spare tillages (zimmerman, conskill), tractor, mower (batwing mower with a plow equipment)
      iv. 3 rippers - would like a space for storage of spare parts
      v. Would like to have more storage space for older equipment stock/parts
      vi. Storage in mezzanine (but not convenient)
   b. Vehicles
      i. Generally, store machines everywhere they can
      ii. Parking to accommodate all of the semis in the morning @ VLB (could be up to 20) trucks park everywhere
      iii. Heated space to keep trailers warm during the colder months
      iv. Maint Facility can fit 6 trucks to keep warm so they don't freeze up
      v. Some contractors can take equipment home to keep warm, this is limited and not typical
   c. Flammables
      i. Used Oil storage: 1,000 gal.
         a. Used oils in the same room (oil waste cube) - needs vehicular access to extract used oil out the side of the bldg
         b. Oil room should be close to the shop, outside wall to extract used oil
      a. Fuel: 10,000 gal. fueling tanks
         a. Keep diesel and regular fuel separate but could consolidate locations to an extent. Don't want regular fuel dispensed instead of diesel and vice versa.
5. **Maintenance**
   a. Existing Maintenance is done inside the VLB
      i. (only 1 machine in the building at a time) - can't physically move around the applicator machines (Oxbo) to work on them
      ii. Not sufficient headroom or an overhead crane to get around the machines
      iii. Need a 35' wide bay to work around the injectors (Zimmerman)
   b. PREFER:
      i. Wide vehicle bays with large OH door
      ii. Storage to park 12-14 trailers, heated to 40 degrees (just keep it above freezing) – Could look at using heat from effluent?
      iii. Wash bay - all equipment needs to be washed - VLB is currently only building with wash bay. The rest of the plant is able to use the wash bay, but since the

nurse tanks have to be cleaned off immediately following use the bay isn't always available for everyone to use

iv. Crane with a 10- ton capacity

v. Load out at Metrogro is metered, but load out at VLB is done by operator's best judgement. A scale at each of the load out locations is desired. A shared weigh station would be ok, but would slow down the process and incur additional driver fees.

6. **Personnel Space**
   a. Offices, maintenance
      i. Its small, but it works. Bathrooms, shower (staff is on-site for little time)
      ii. Years ago they would take lunch, but now they don't take lunch and work the contractors throughout the day
      iii. Additional office space is needed for Metrogro staff in VLB and offices should be near each other
      iv. Mechanics desks are out in the shop, which isn't ideal
      v. Conditioned shop desired
   b. Zach and Ross should be adjacent

7. **Security**
   a. Current operator's rates are $120/hr, so waiting for a security gate to open would affect costs.

The above represents the writer's understanding of the meeting. Any errors, omission, and/or discrepancies should be reported to him/her promptly.

Capital Project Infrastructure Placement Plan

WORKSHOP 02
JANUARY 31, 2023

Madison Metropolitan Sewerage District

Agenda

8:30 -10a **Workshop 01 Recap and Discussion**

1. Introductions
2. Project Goals
3. Schedule
4. What we heard from Workshop 01 and questionnaire
5. Existing conditions
6. Draft Program
    a. CIP
    b. Staff Input

10:00 -10:15a **Break**

10:15 – 11:30a **Alternatives Presentation**

1. Evaluation Criteria
2. Options 1 -3

1-2:30 **Alternatives Small Group Discussion**

1. Discuss each Option with regards to project goals and evaluation criteria

2:30-2:50 **Break**

2:50-4:00p **Alternatives Review Report Back and Revisions**

1. Report back on small group discussions, Alternatives Pros/Cons
2. Revisions made during discussions
3. Final thoughts on Alternatives and Program

Project Goals

1. Locate new infrastructure projects aligned with strategic priorities
2. Consider future infrastructure and maintenance needs
3. Allow for safe movement of staff and visitors

Plan Considerations

- Growth in staff/ office space needs
- Modern office and IT needs
- Safety and security
- Public access

The plan will...

- Consider general placement of program/strategic infrastructure priorities
- Provide planning level cost estimates

The Plan won't...

- Design of buildings, initiatives, or efforts identified in approved plans that require additional investigation
- Analysis of alternatives identified in previous plans
- Financial impact analysis

Success Criteria and Strategy...

Strategic Performance Areas

What does Plan success look like?

- Helps prepare for the 2024 Capital Improvements Plan
- Is implementable, provides data-based information to guide decision-making
- Is relatable and easily presented

Schedule

Organize/Review Background Info. Fall 2022
Project Introduction Workshop 01 Nov. 15-16, '22
Site Analysis/ Draft Alternatives
Alternative Analysis Workshop 02 Jan. 31, 2023
We are here
Alternatives Refinement February 2023
Final Alternative Review Workshop 03 TBD
Final Capital Project Infrastructure Placement Plan April 2023

How do we start?

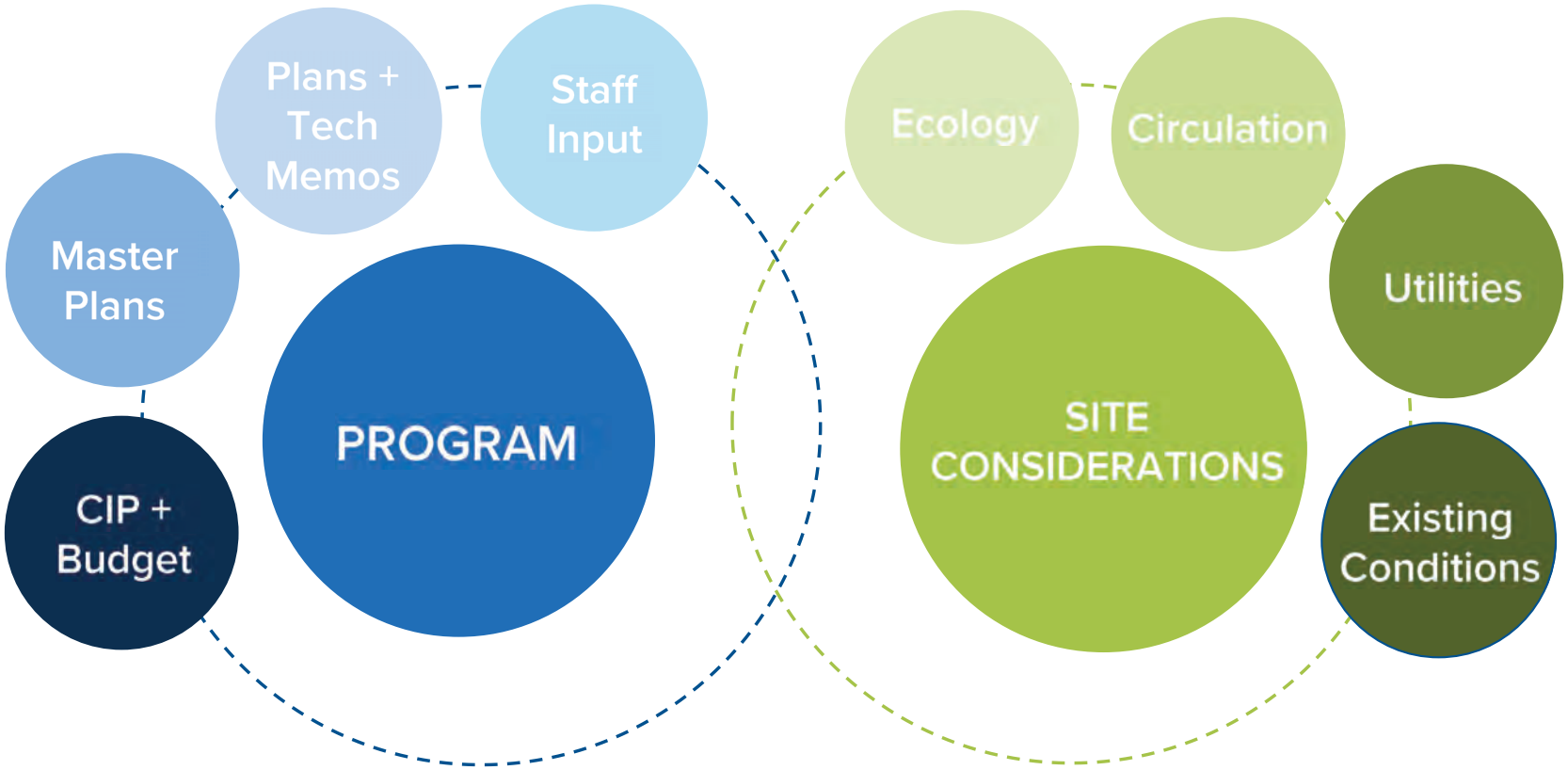

Visioning Session

Our Purpose

Protect public health, welfare and the environment by providing efficient and strategic wastewater management on behalf of our owner communities.

	To Our Customers Customer Perspective	To Our Internal Processes Internal Perspective	With Our Ability to Innovate Innovation and Learning
What does a successful plan look like?			
What are the critical constraints?			
What are the physical requirements?			

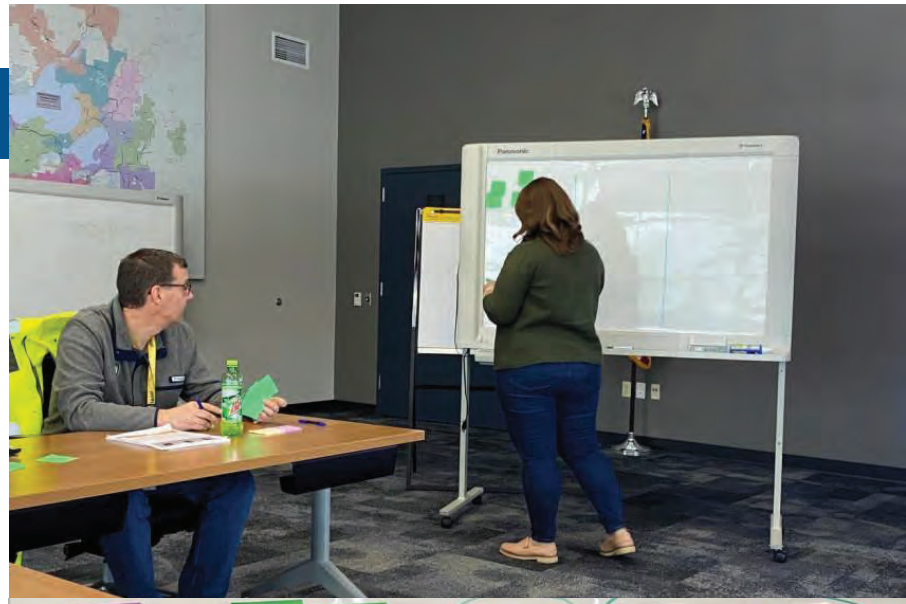

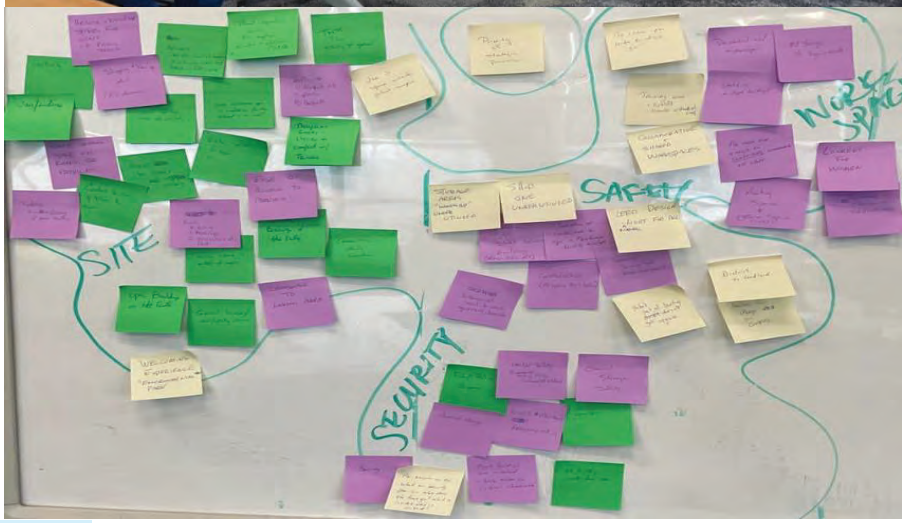

What does success look like for our customer?

What does success look like for internal processes?

Ability to innovate?

Questionnaire

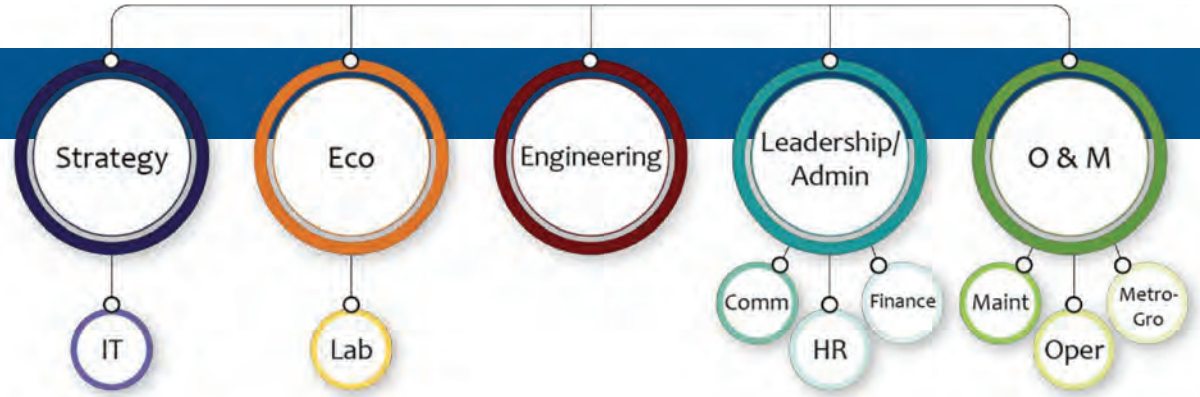

- No room for expansion (consistent comment)
- Storage is unsightly, lacking, or in the wrong place
- Separation of work spaces and congregating areas
- Upgrade health/wellness areas
- Separate public access and secured work areas – upgrade security
- Wayfinding!
- Upgrade IT infrastructure (meeting room design & set-up)
- Staff area comfort: views, break-out spaces, and natural light
- Need additional support spaces (lockers, PPE storage, appropriate chemical storage)

PLANS, PLANS, PLANS

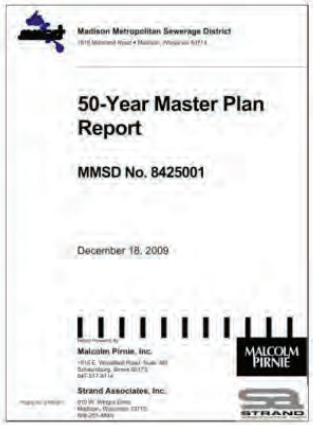

- 2016 Liquid Processing Facilities Plan: Septage Receiving Improvements and West Blowers Replacement
- Biosolids Management Plan: Metrogro Improvements
- 2020 Energy Master Plan: Heat and Power Improvements

Site Context

Ecology

Key
Viewshed
High Point
Stormwater flow
Steep Slopes
Wetland
Woodland
South Town Drive
Raywood Rd
Moorland Rd
Moorland Rd

Circulation

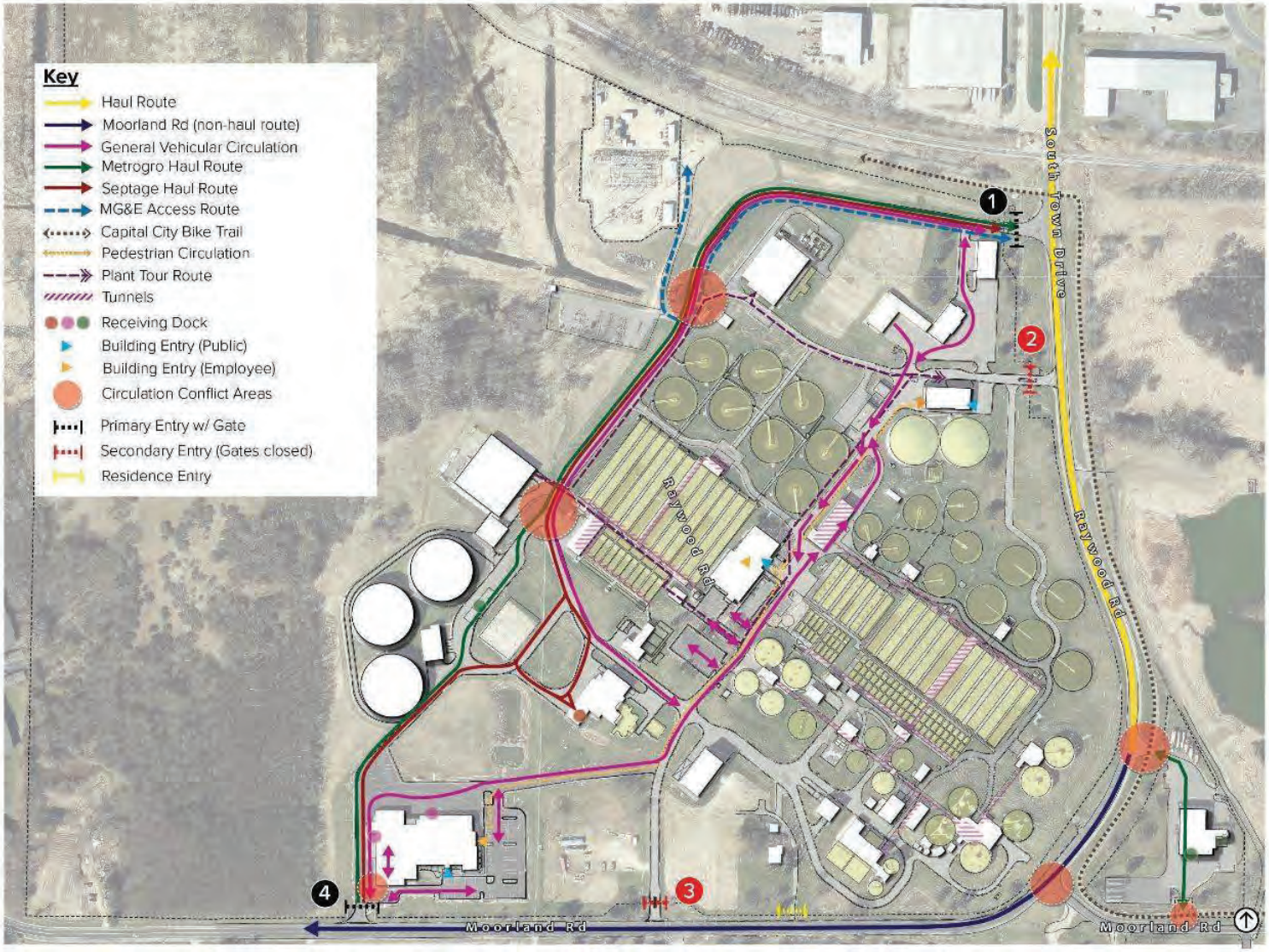

Utilities

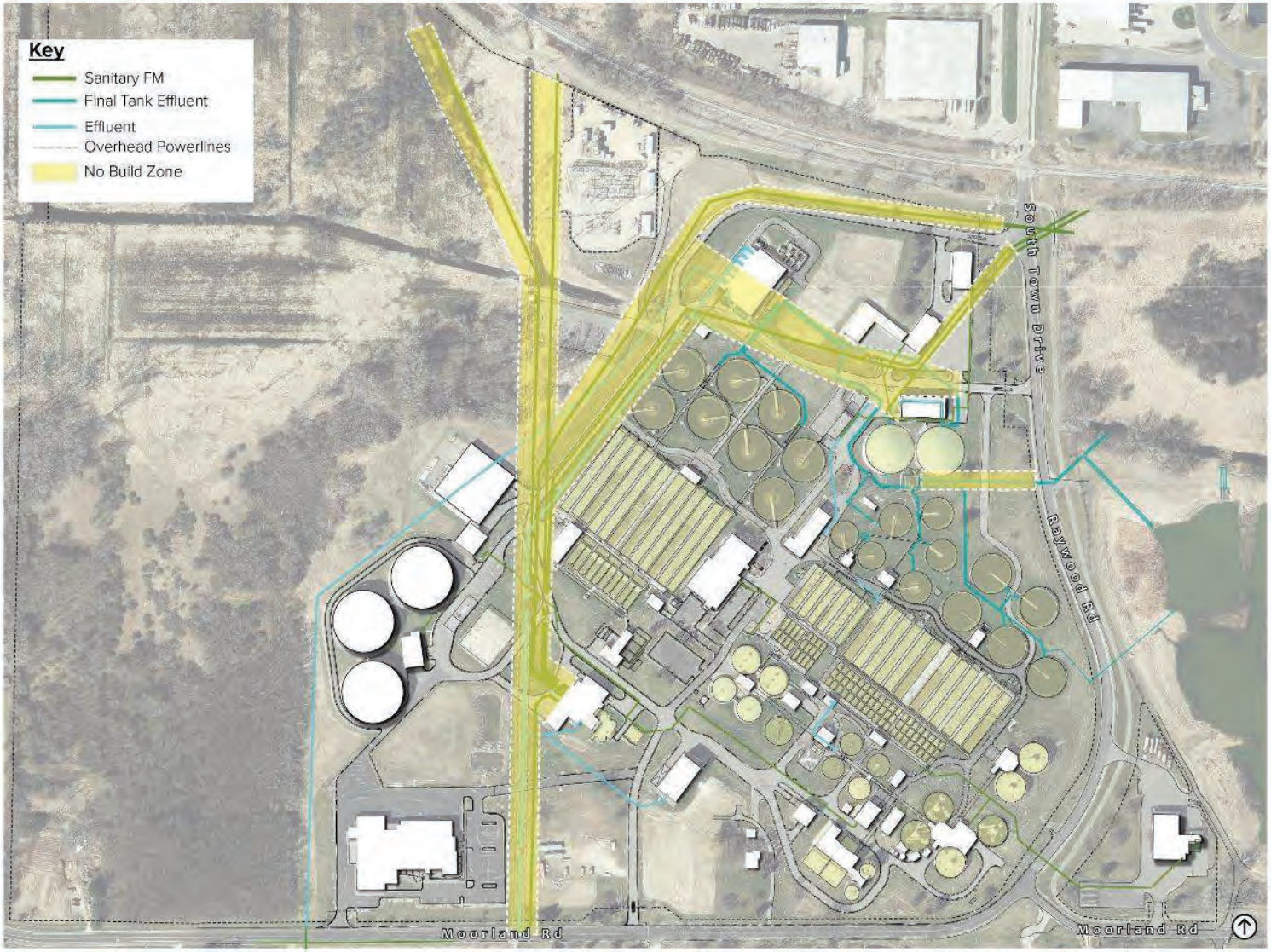
Key
Sanitary FM
Final Tank Effluent
Effluent
Overhead Powerlines
No Build Zone
Moorland Rd
South Town Drive
Raywood Rd
Moorland Rd

Parking/Fleet Storage

Fleet Storage

1986 GMC	#468 Truck
2018 New Holland	T5.110
John Deere	End Loader

Metrogro Fleet Storage

2021 OXBO	Applicator
2004 Ag-Chem	Applicator
2006 Ag-Chem	Applicator
2008 Ag-Chem	Applicator
2022 OXBO	Applicator
Unknown	Nurse Tank
Unknown	Nurse Tank
Unknown	Nurse Tank
Unknown	Nurse Tank

Fleet Storage

2019 Ford	#497 F350
2012 Ford	#458 Truck
2011 Ford	#453 Truck
2016 Ford	F250 XL
2019 Ford	#489 Pickup
2017 Ford	Promaster
2015 Ford	Transit Van
2014 Ford	Econoline Van
2008 Ford	#452 Truck
2008 Ford	#451 Truck
2012 Ford	Truck
2009 Ford	#424 Van
2005 GMC	#498 Truck
2003 GMC	#467 Truck
2019 Nissan	Frontier
2019 Nissan	Frontier
2020 Dodge	Ram 3500
2006 Dodge	#461 Caravan
2017 Dodge	Van
2020 Ram	2500
2020 Nissan	NV200 SV
2014 Ford	Transit Van
Electric Cars	6 Total

Fleet Storage - Operations Below Parking Area

2020 Dodge	Ram 1500
2004 Ford	#457 Truck
2005 Chev	#421 Truck
2005 Chev	#466 Van
2008 Chev	#456 Truck
2021 GMC	Canyon
2016 Nissan	Leaf Electric Car
Electric Cars	3 Total

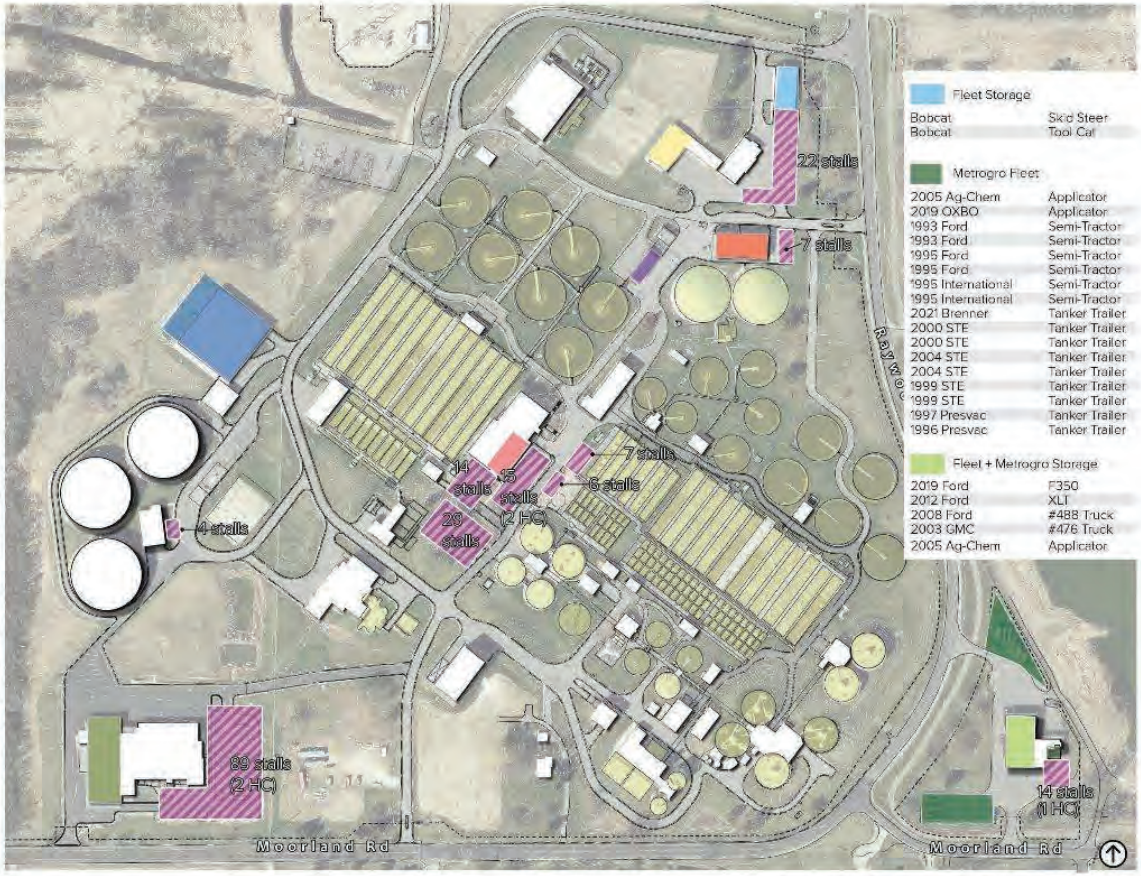

Fleet Storage

Bobcat	Skid Steer
Bobcat	Tool Cat

Metrogro Fleet

2005 Ag-Chem	Applicator
2019 OXBO	Applicator
1993 Ford	Semi-Tractor
1993 Ford	Semi-Tractor
1995 Ford	Semi-Tractor
1995 Ford	Semi-Tractor
1995 International	Semi-Tractor
1995 International	Semi-Tractor
2021 Brenner	Tanker Trailer
2000 STE	Tanker Trailer
2000 STE	Tanker Trailer
2004 STE	Tanker Trailer
2004 STE	Tanker Trailer
1999 STE	Tanker Trailer
1999 STE	Tanker Trailer
1997 Presvac	Tanker Trailer
1996 Presvac	Tanker Trailer

Fleet + Metrogro Storage

2019 Ford	F350
2012 Ford	XLT
2008 Ford	#488 Truck
2003 GMC	#476 Truck
2005 Ag-Chem	Applicator

Metrogro Fleet Storage (located in Pit Area)

1980 IME	Tanker Trailer
1980 IME	Tanker Trailer
1980 IME	Tanker Trailer
1980 IME	Tanker Trailer
1980 IME	Tanker Trailer
1980 IME	Tanker Trailer
2010 Brenner	Tanker Trailer
2022 Brenner	Tanker Trailer

Building Functions

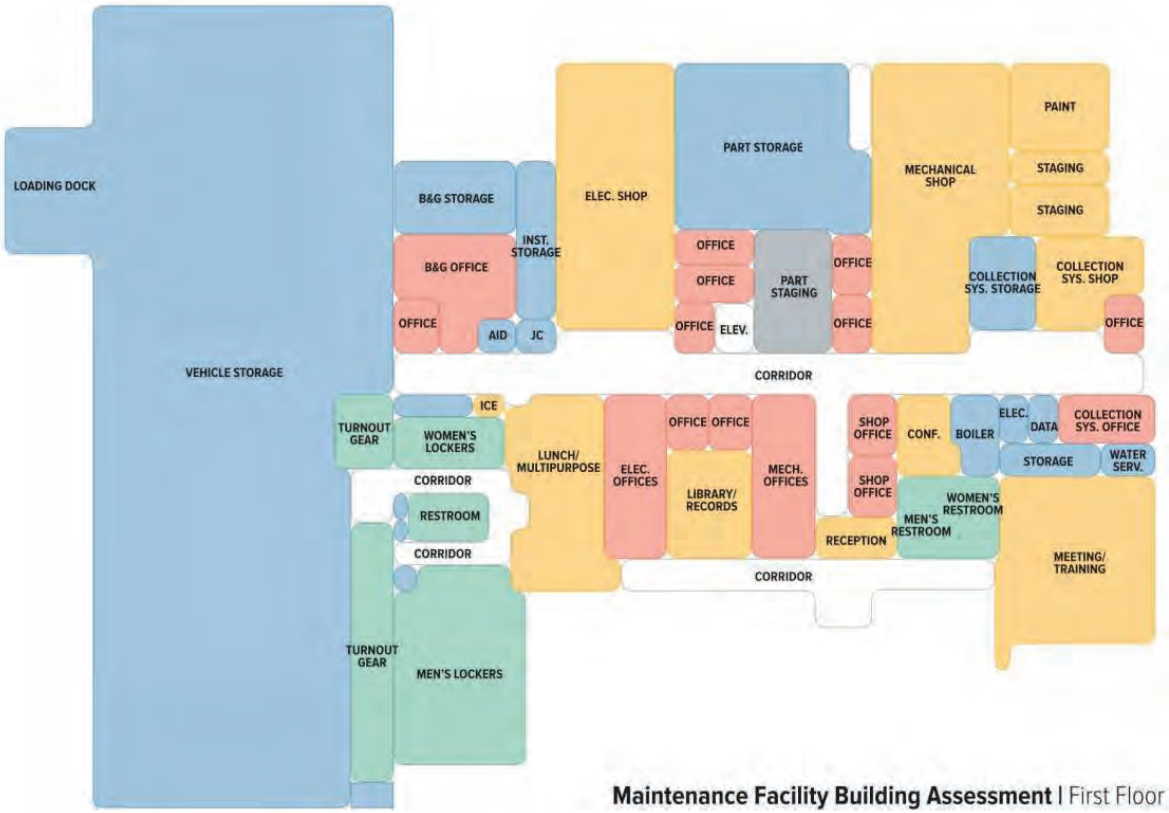

Maintenance Facility Building Assessment | First Floor

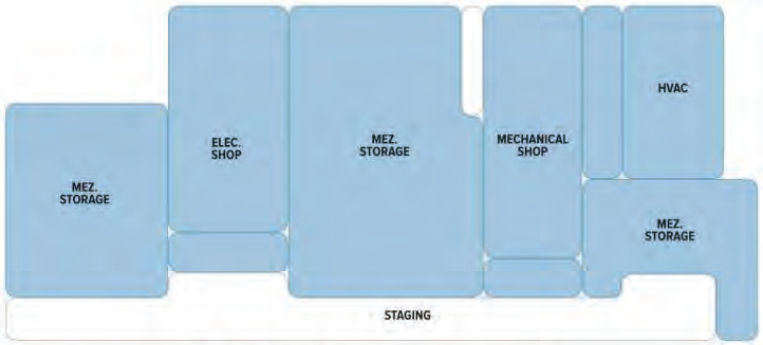

Maintenance Facility Building Assessment | Mezzanine

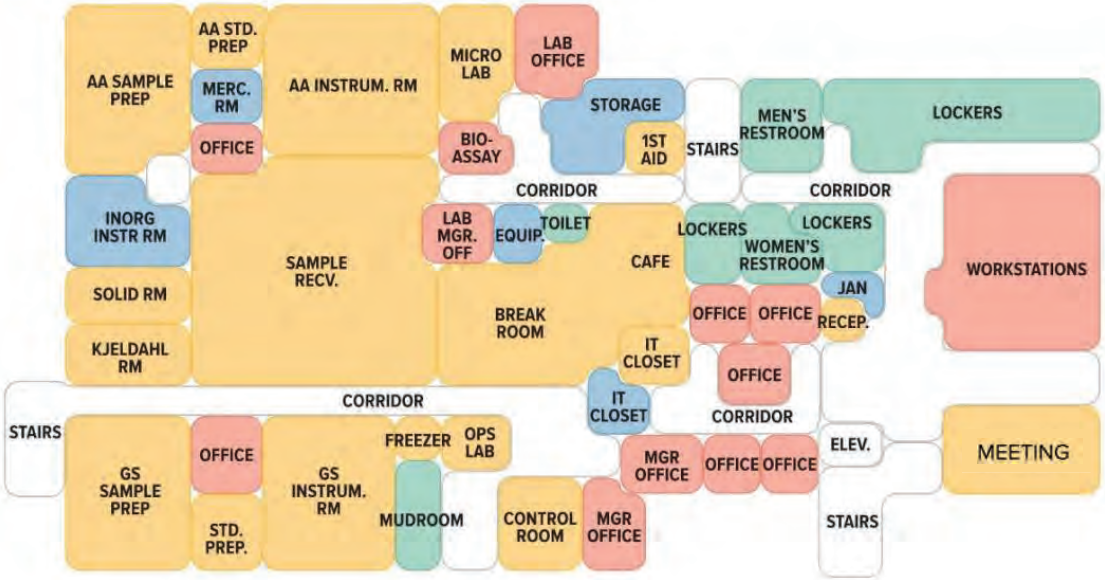

Operations Building Assessment | First Floor

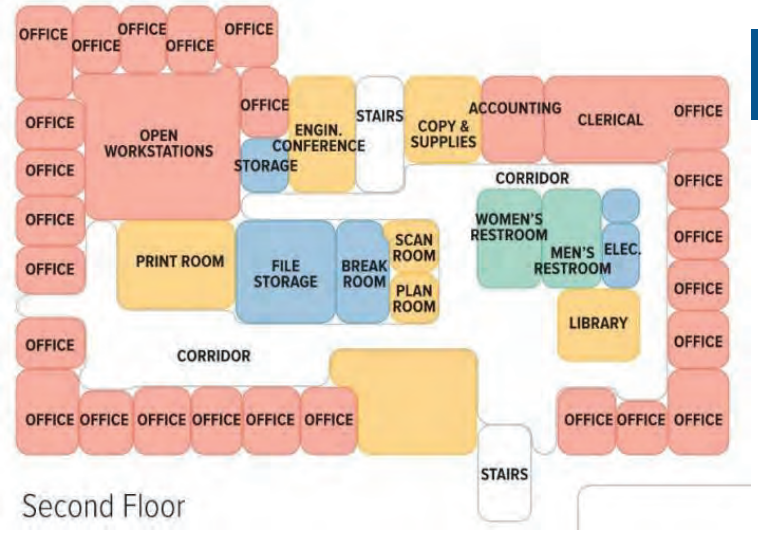

Second Floor

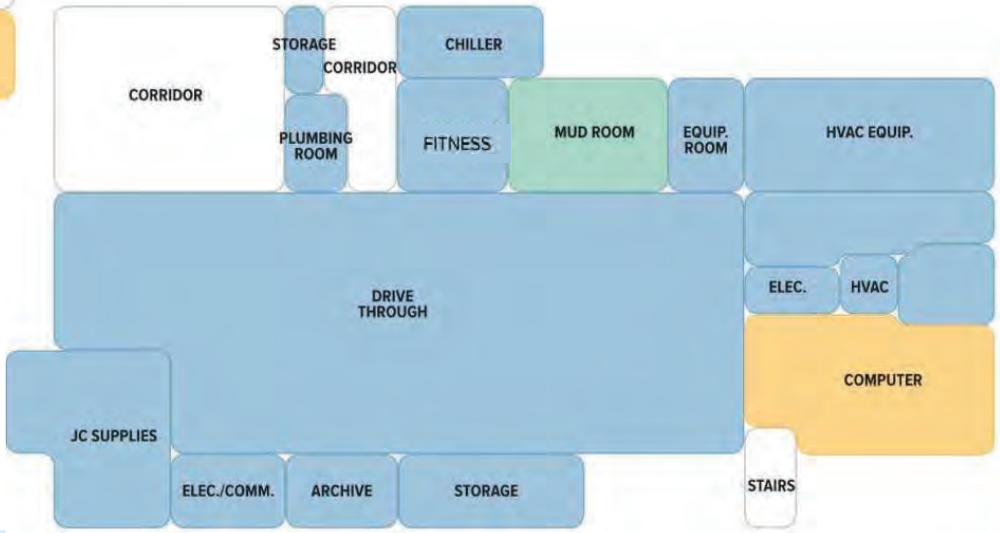

Basement

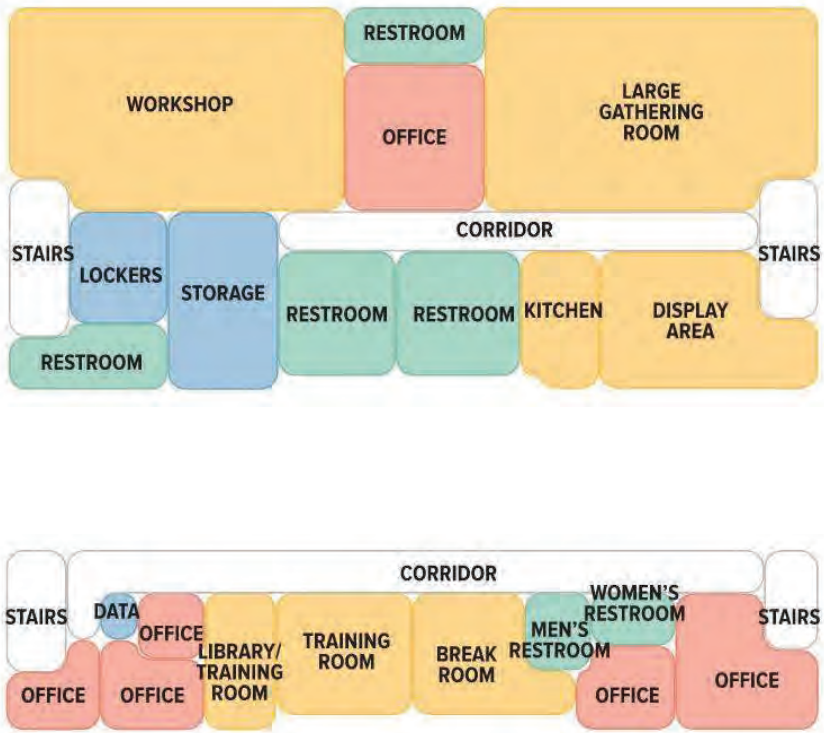

Shop One

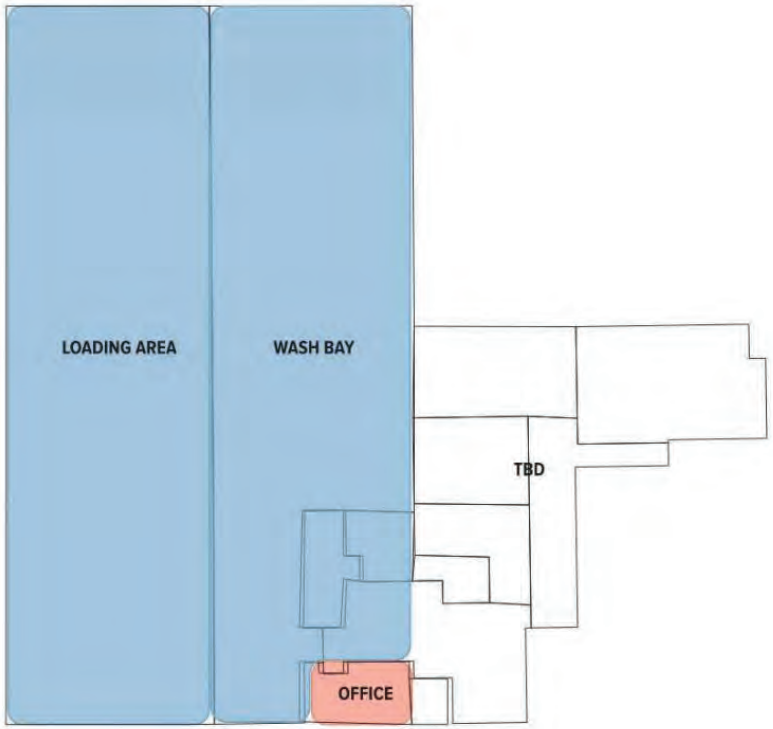

Vehicle Loading Building

What did we hear?

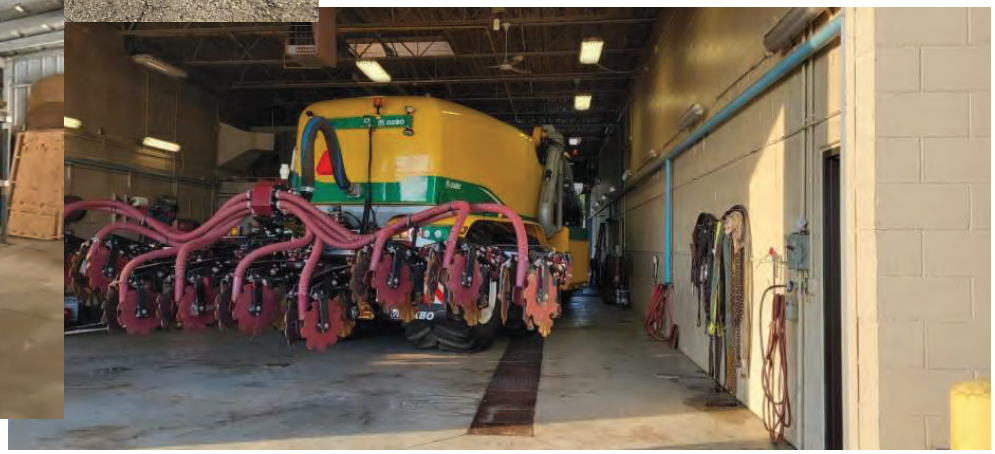

Program

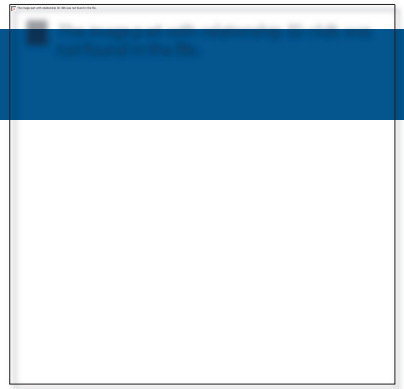

West Blowers Replacement

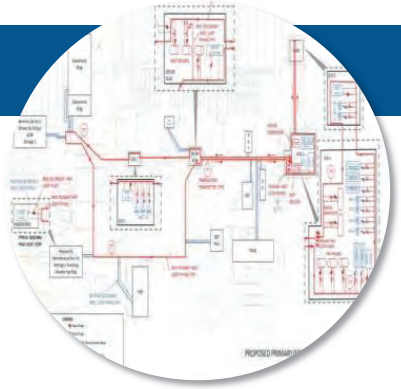

Heat and Power Improvements

Septage Receiving Improvements

Metrogro Improvements

Program

Safety/Security Improvements

- Public Access
- Fencing

Circulation Improvements

- Public Access/Uses
- Pedestrian/Vehicular

Staff Workplace Improvements

- Expanded work space, locker rooms
- Multi-purpose meeting rooms
- Wellness spaces
- Business services hub

Storage

- Consolidation of inventory
- Chemicals
- Fleet

PLEASE
STAND BY

Alternatives Review

Option 01: Optimize Existing Assets

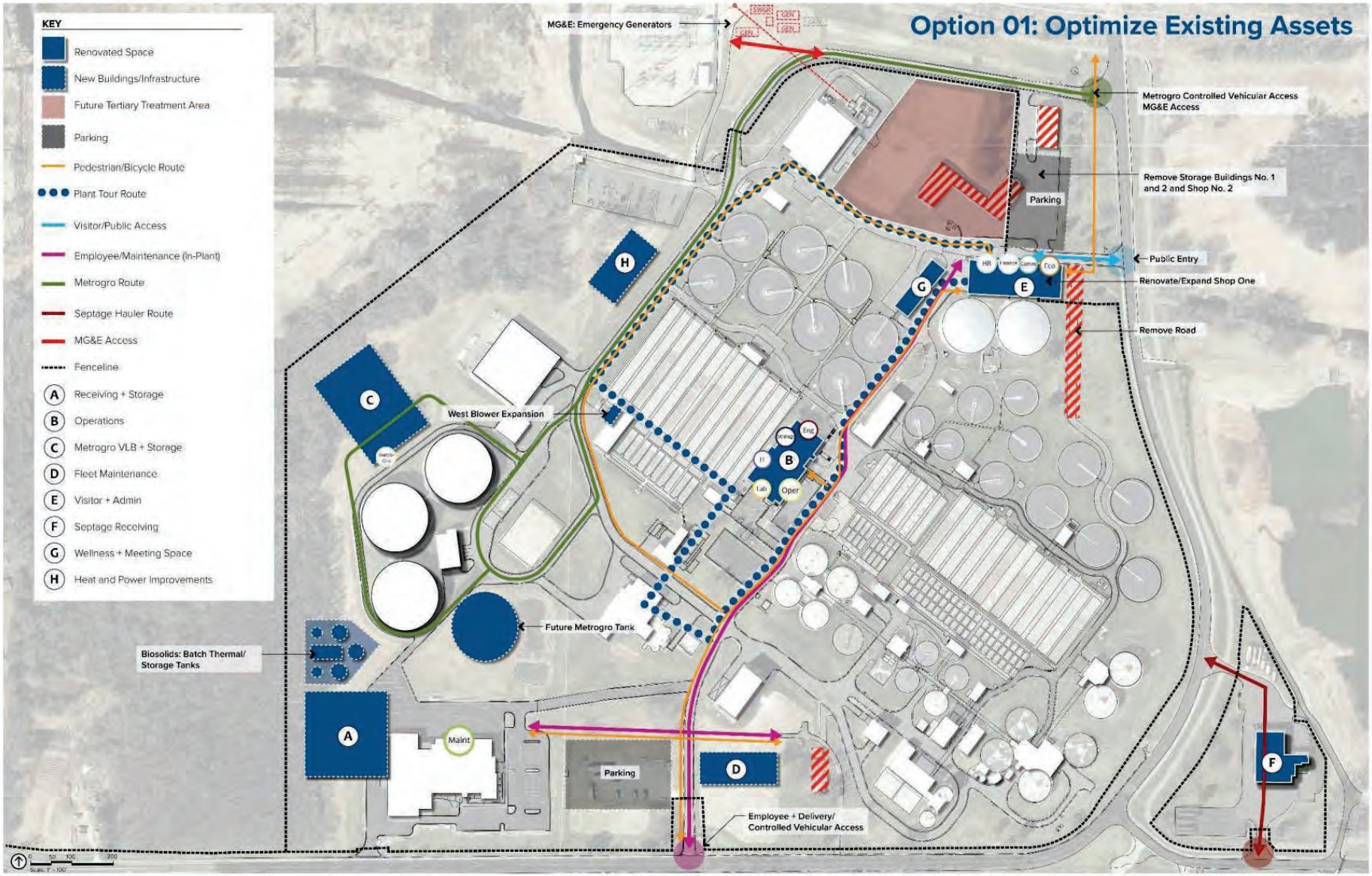

Option 02: Mix Existing Assets + New

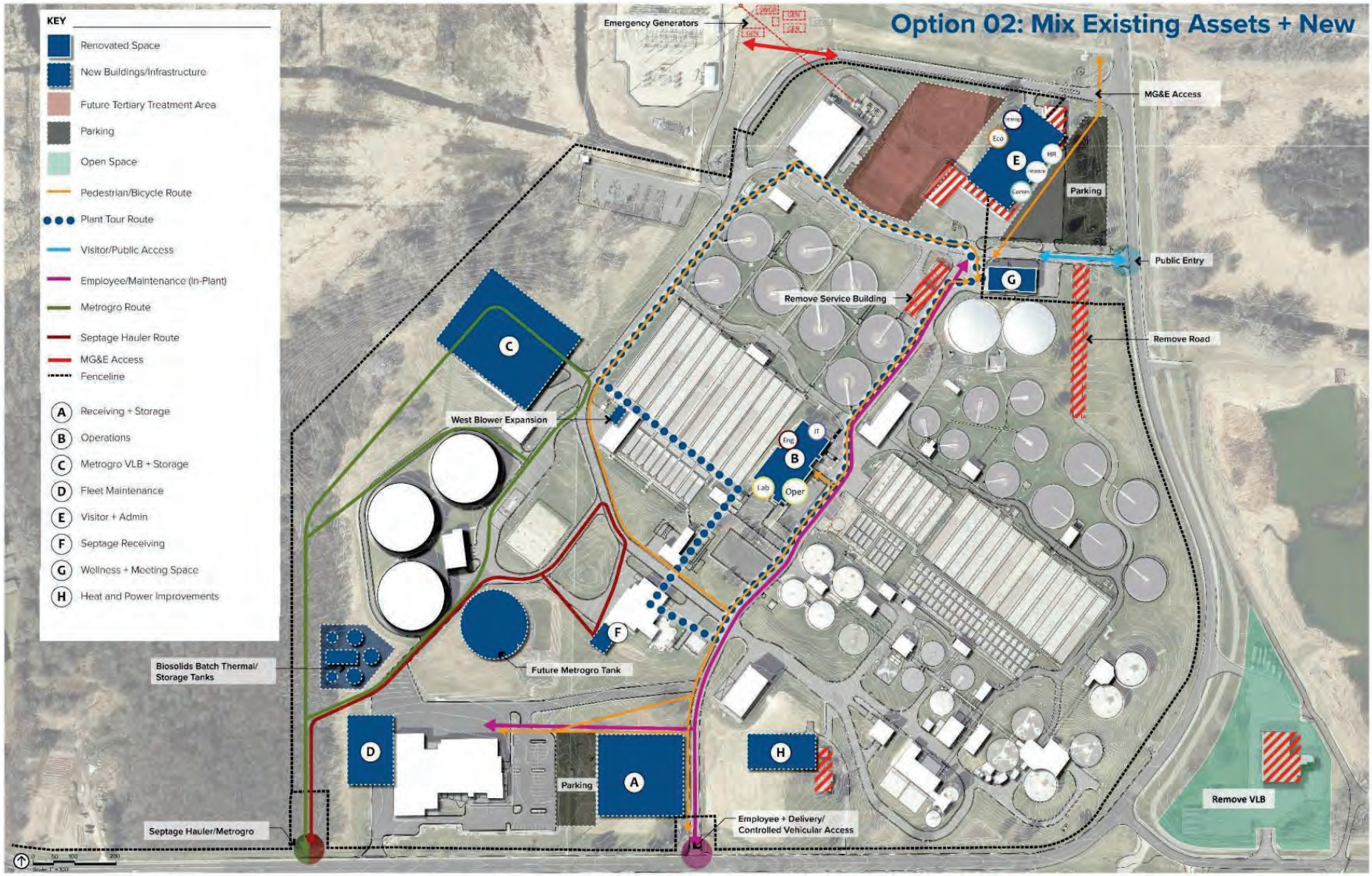

Option 03: Centralize Staff

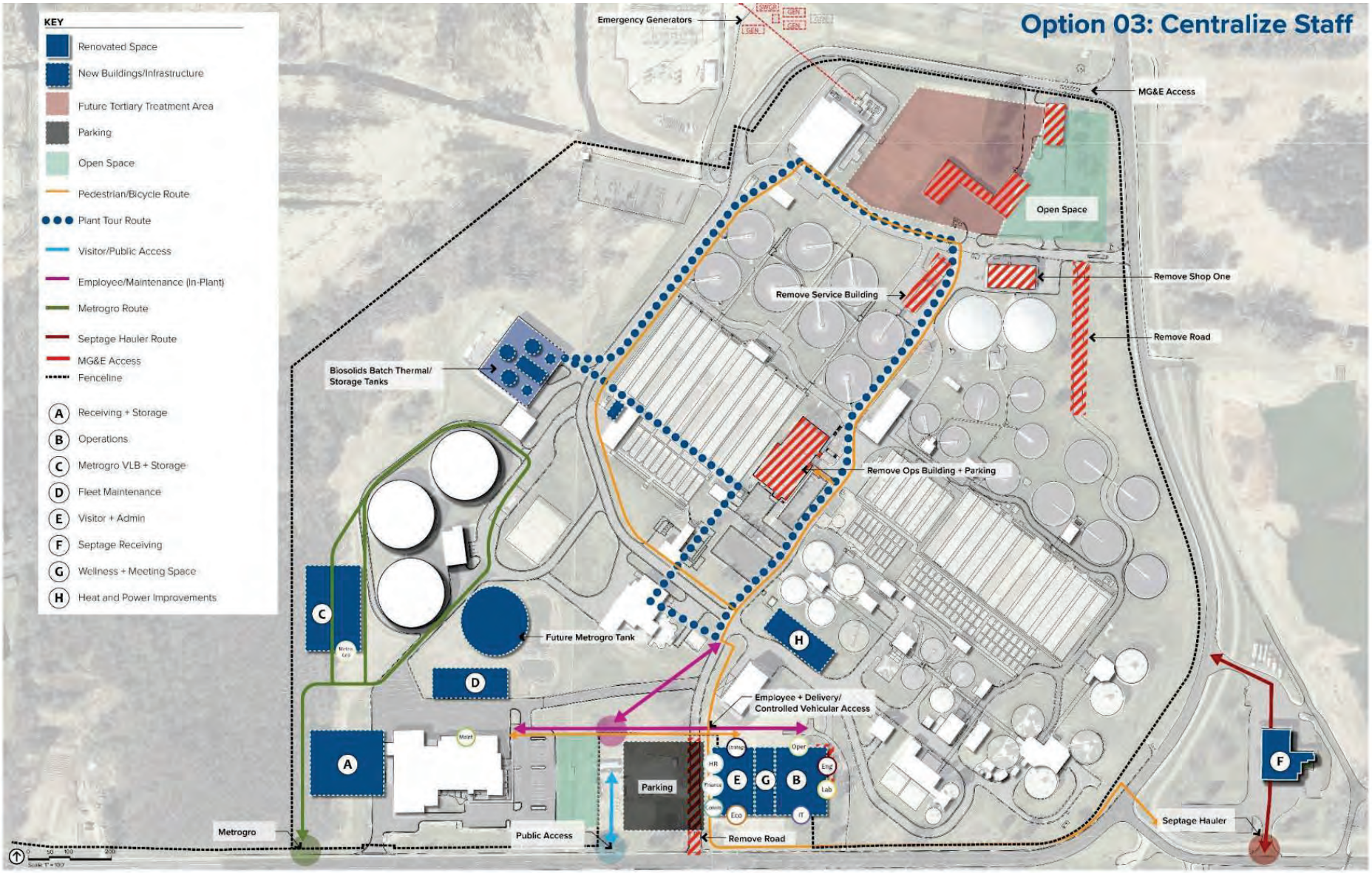

PLEASE
STAND BY

Small Group Discussion

Right activity/program in the right place?

- No build alternative?
- Workforce Development
  - Does this allow you to do your job more efficiently?
  - Are circulation conflicts addressed?
  - Enough storage?
  - Pros/cons if your work space moves? If it doesn't move?
- Public Trust
  - Is there a clear separation of public vs. plant functions?
  - Do the access points address security strategies?

Small Group Feedback and Wrap-Up

Thank you!

TKDA

CIP

CIP ID#
A01.4 West Blowers and Switchgear Replacement

Start Date
2022

Completion Date
2026

Project Type
Plant Improvements – Aeration System

Location
Nine Springs Wastewater Treatment Plant

Description
This project will replace the west blowers and associated medium-voltage switchgear. These facilities have been in operation for more than 35 years, and they are currently operating beyond their expected lifespan. This project was included in the 2016 Liquid Processing Facilities Plan. It is anticipated that the costs of the project will be funded through the Clean Water Fund.

Background
The 2016 Liquid Processing Facilities Plan recommended replacement of the west blowers using a phased approach. The plan called for two blowers to be replaced between 2020 and 2025, and the remaining blower and blower switchgear to be replaced shortly after 2024. Since the plan was developed, the condition of the blowers has deteriorated significantly, and one of the units is inoperable and requires costly repairs. Given the condition and criticality of this equipment, District operations staff is recommending that all three blowers and associated switchgear be replaced as soon as possible to ensure that this critical process continues to operate satisfactorily.

CIP ID#
A04.1 Heat and Power Improvements

Start Date
2025

Completion Date
2031

Project Type
Energy-Related Projects – Use Reduction/Generation

Location
Nine Springs Wastewater Treatment Plant

Description
The purpose of this project is to identify and replace aging assets associated with the District's energy-producing infrastructure and to optimize the use of energy going forward. These improvements will position the District to use its biogas to generate electricity on site at greater efficiency or to produce a biogas of pipeline quality that can be sold to others. This project was evaluated as part of the 2020 Energy Management Master Plan. Additional facility planning and design phases are expected to precede construction. It is anticipated that all project costs will be financed through a loan from the Clean Water Fund.

Background
An energy study was conducted in 2014 by Strand and Brown and Caldwell to provide a roadmap for how the District might achieve energy independence. Areas of focus included ways to reduce energy usage, improve utilization of digester gas and produce more energy. The 2020 master planning study expanded on all these areas and examined the most energy-efficient way to handle and dispose of biosolids. It is anticipated that the master plan will lead to three major projects going forward: (1) Heat and Power Improvements; (2) Biosolids Processing; and (3) Miscellaneous Energy Projects.

CIP ID#
A11 Septage Receiving Modifications

Start Date
2024

Completion Date
2027

Project Type
Plant Improvements – Septage Receiving

Location
Nine Springs Wastewater Treatment Plant

Description
This project will correct problems encountered with operation of the existing septage receiving facility. Work will include reconfiguration of the existing facility to allow improved traffic flow, better screening equipment upstream of the Headworks Facility and implementation of more security and tracking measures to reduce the potential for unauthorized discharges. This project was included in the 2016 Liquid Processing Facilities Plan. It is anticipated that project costs will be funded through the Clean Water Fund.

Background
The septage receiving facility was constructed as part of the Tenth Addition to the treatment plant and has experienced a number of operational difficulties since it was placed into operation. Trucks discharging at the facility have to back up to empty their contents, resulting in congestion during periods of heavy traffic and icy and unsafe conditions in winter. Further, sand and grit accumulate in the discharge trough, which requires manual cleaning by District staff on a frequent basis. Improvements will allow for one-way traffic for haulers and an improved screening system to keep unwanted material out of the screening channel. A space needs study for the treatment plant is planned for 2022-2023, which will help inform the preferred location of the future facility.

Capital Project Infrastructure Placement Plan

CONCEPT PRESENTATION

April 10, 2023

Madison Metropolitan Sewerage District

Agenda

1:00 -1:30p **Workshop 02 Recap and Discussion**

1. Introduction
2. Project Goals
3. Recap Workshop 02
    a. Updated program/projects

1:30 – 2:30 **Infrastructure Placement Recommendations**

1. Biosolids Improvements
2. Septage Receiving Improvements
3. Campus Security
4. Workplace Improvements
5. Regional Stormwater System
6. Solids Digestion Expansion

2:30 – 3:00 **Discussion and Wrap-up**

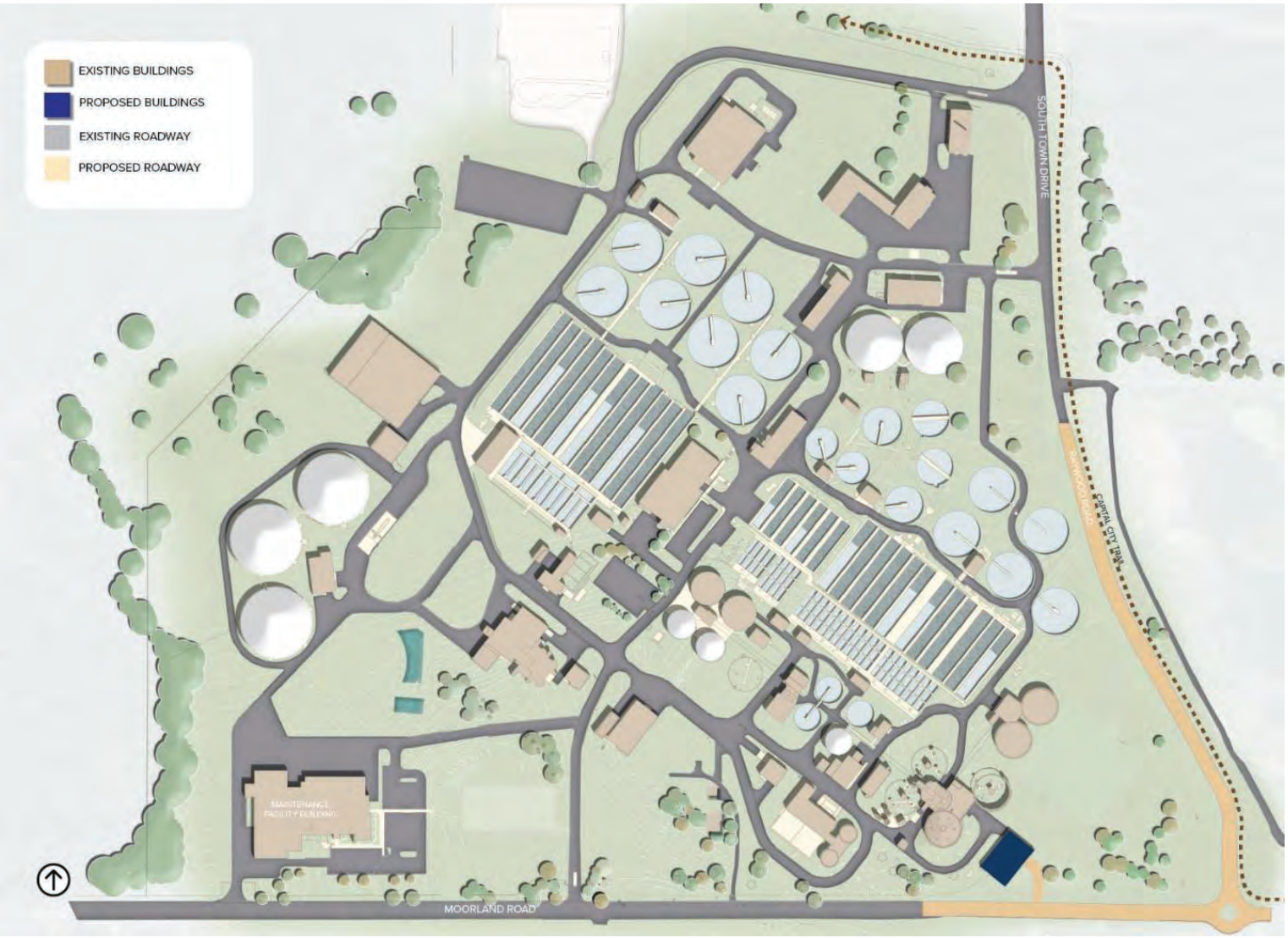
EXISTING BUILDINGS
PROPOSED BUILDINGS
EXISTING ROADWAY
PROPOSED ROADWAY
SOUTH TOWN DRIVE
CAPITAL CITY TRAIL
MAINTENANCE FACILITY BUILDING
MOORLAND ROAD

Project Goals

1. Locate new infrastructure projects aligned with strategic priorities
2. Consider future infrastructure and maintenance needs
3. Allow for safe movement of staff and visitors

Plan Considerations

- Safety and security
- Public access
- Growth in staff/ office space needs
- Modern office and IT needs

The plan will…

- Consider general placement of program/strategic infrastructure priorities
- Provide planning level cost estimates

The Plan won't…

- Design buildings, initiatives, or efforts identified in approved plans that require additional investigation
- Analyze alternatives identified in previous plans
- Analyze financial impact

Success Criteria and Strategy...

Strategic Performance Areas

What does Plan success look like?

- Helps prepare for the 2024 Capital Improvements Plan
- Is implementable, provides data-based information to guide decision-making
- Is relatable and easily presented

Schedule

Organize/Review Background Info. Fall 2022
Project Introduction Workshop 01 Nov. 15-16, '22
Site Analysis/ Draft Alternatives
Alternative Analysis Workshop 02 Jan. 31, 2023
Alternatives Refinement February 2023
We are here
Final Alternative Review Workshop 03 April 10, 2023
Final Capital Project Infrastructure Placement Plan April 2023

Site Context

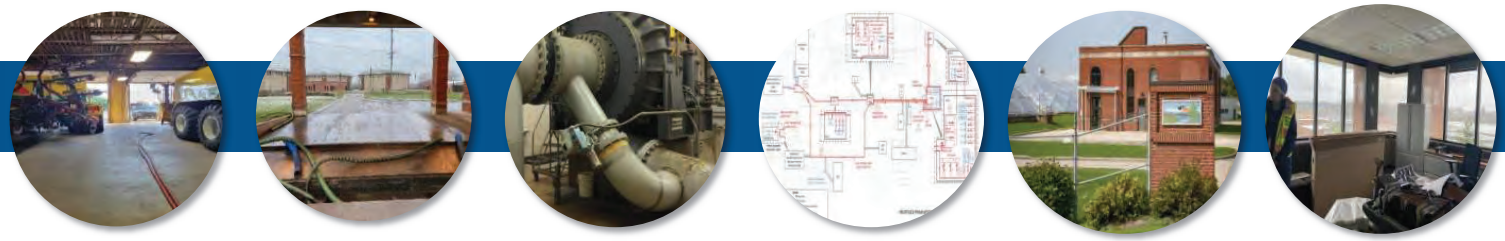

Program

CIP Projects

- Electrical Service Upgrade and Backup Generators
- Biosolids Improvements
- Septage Receiving Improvements
- Heat and Power Improvements
- Liquid Processing Phase 2

New Projects

- Campus Security/Safety Improvements
- General Workplace Improvements
- Plant Expansion/Tertiary Treatment
- Regional Stormwater
- Solids Digestion Expansion

Option 01: Optimize Existing Assets

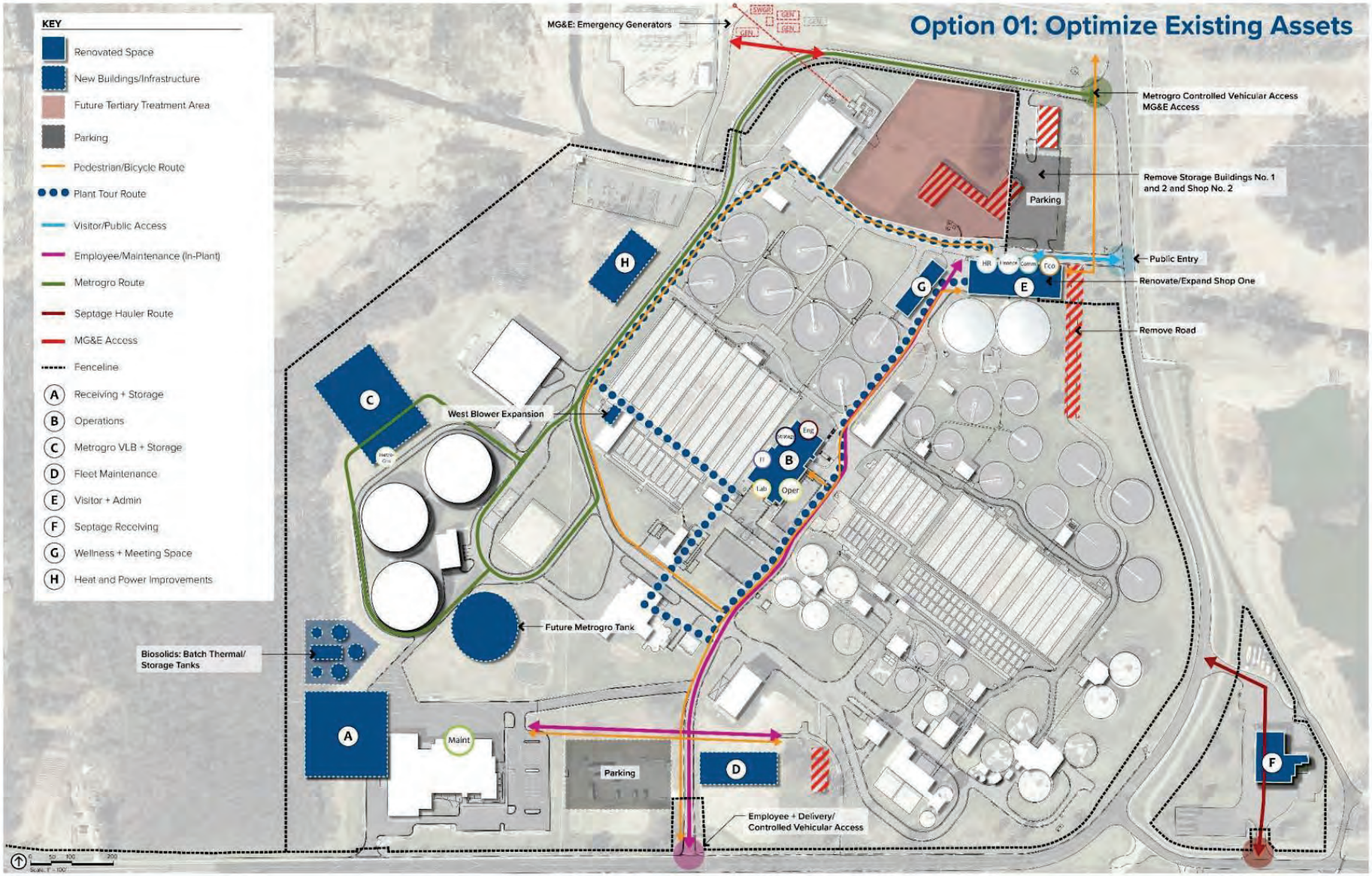

Option 02: Mix Existing Assets + New

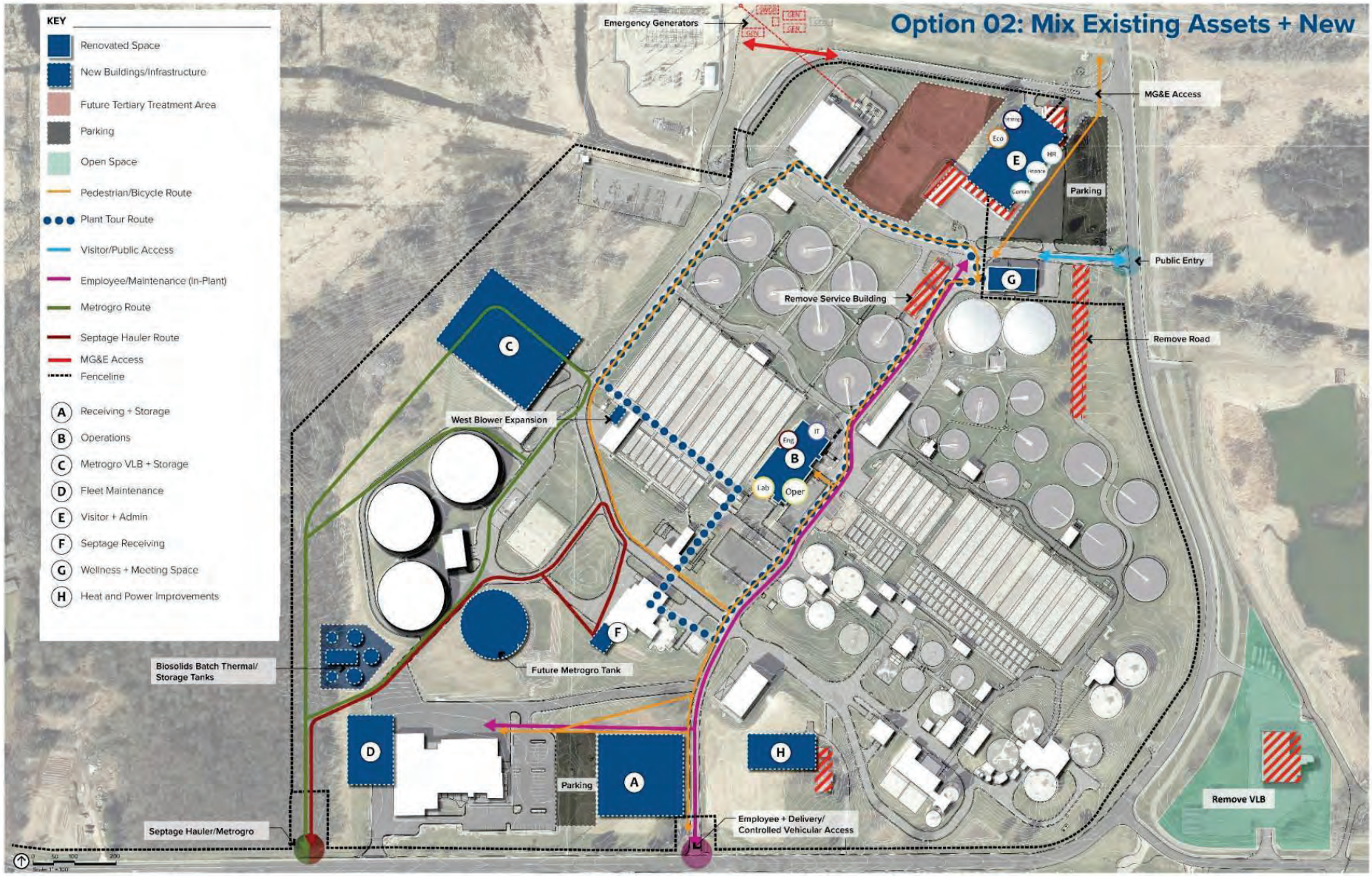

Option 03: Centralize Staff

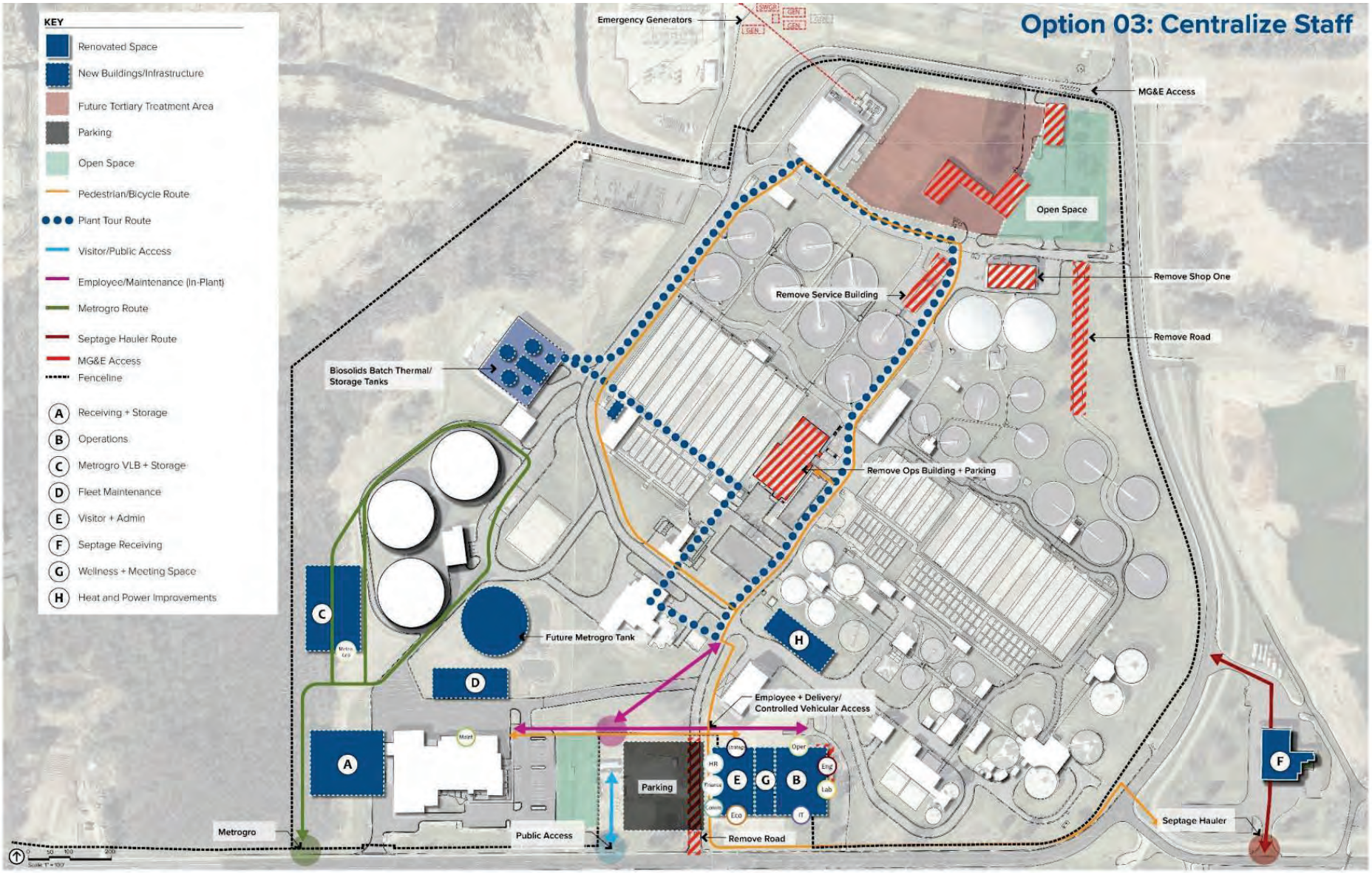

Existing Conditions

Future Expansion

Biosolids Improvements | Vehicle Loading Expansion

Biosolids Improvements | Metrogro Storage & Maintenance

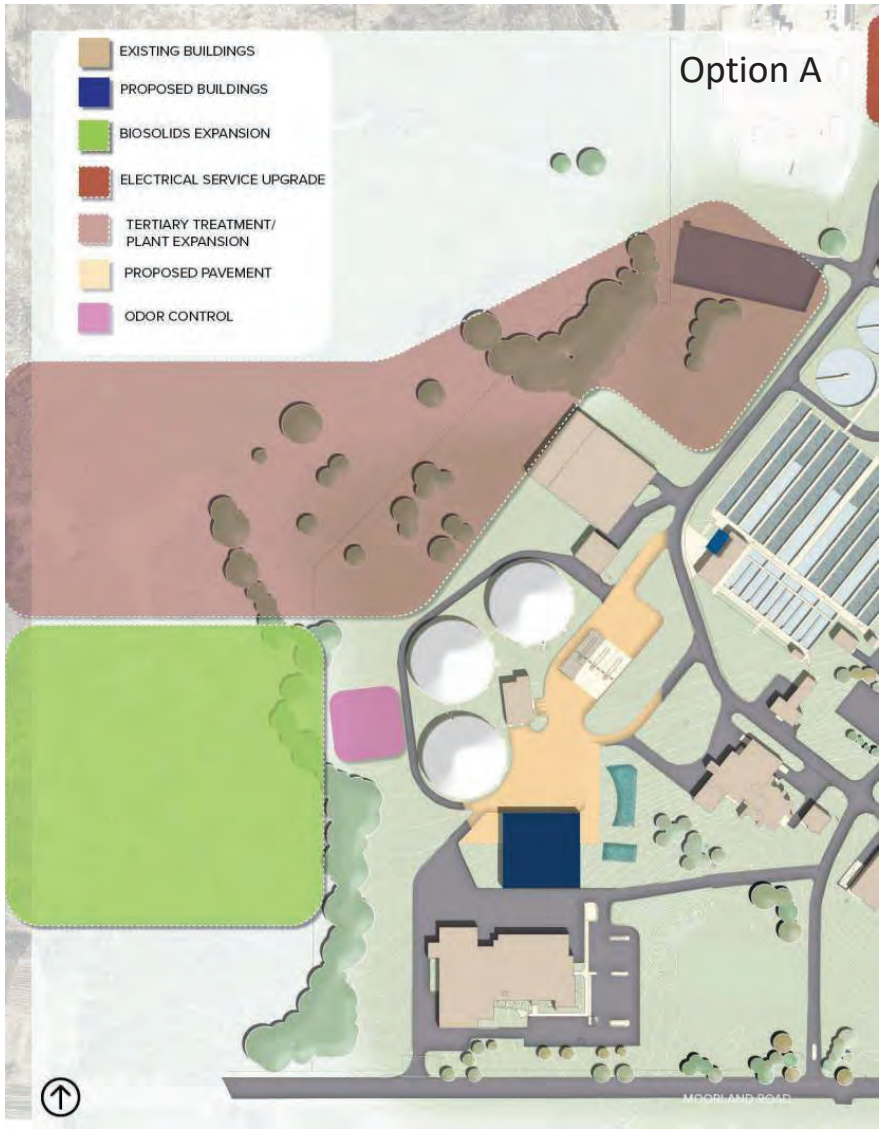

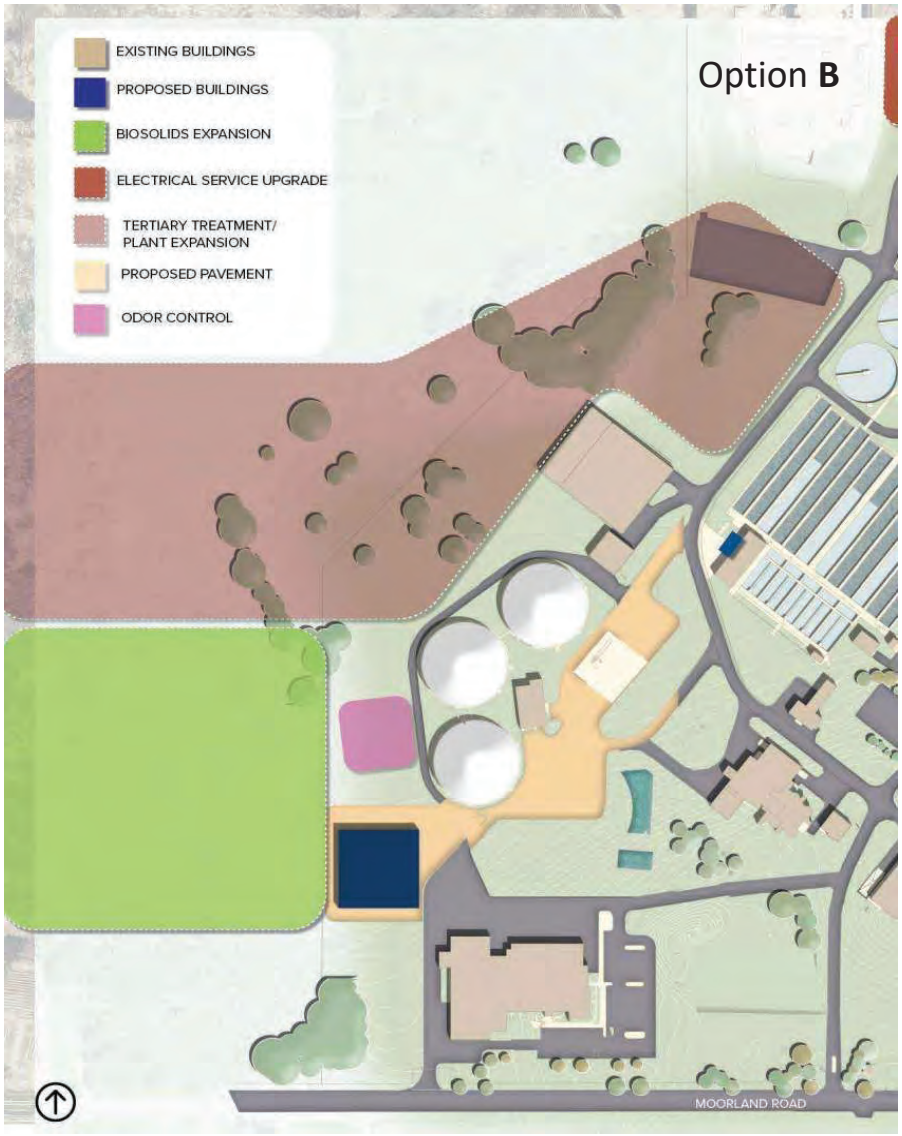

Septage Receiving Improvements

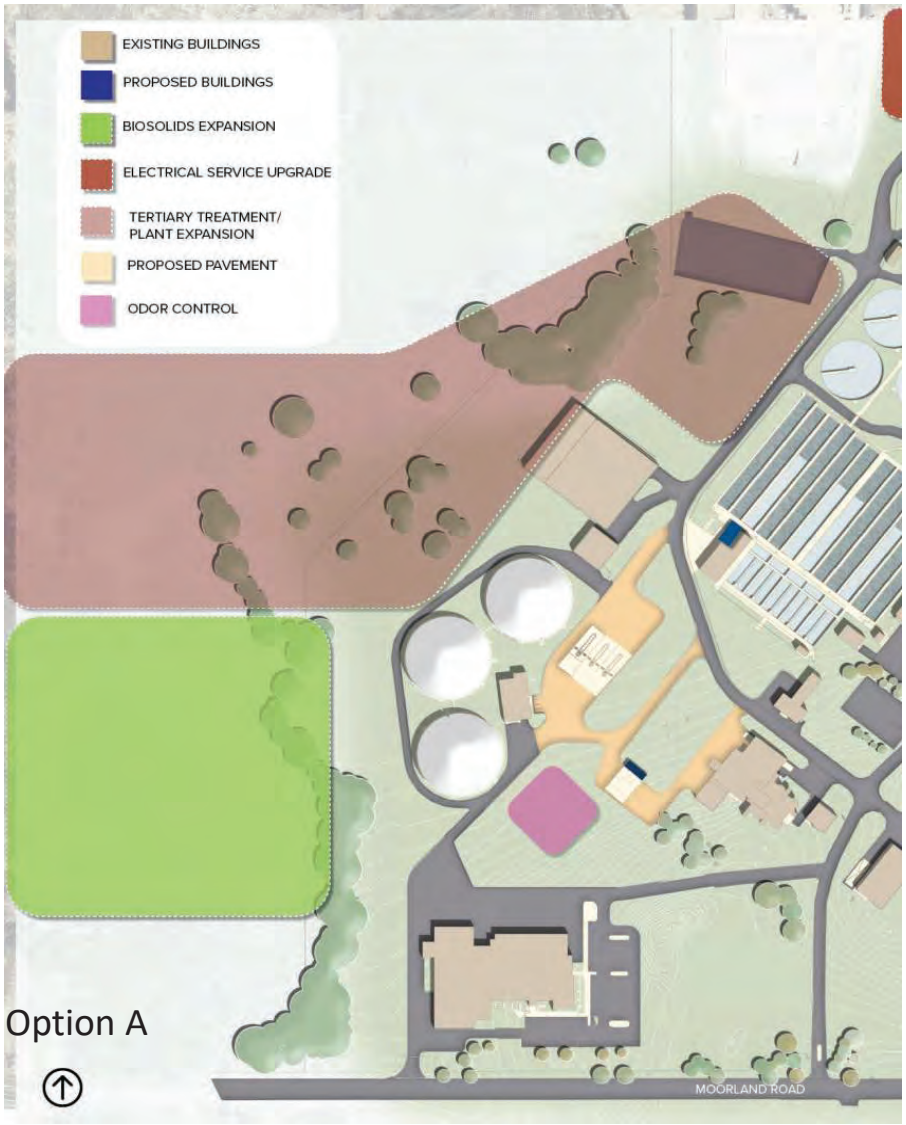

Option A

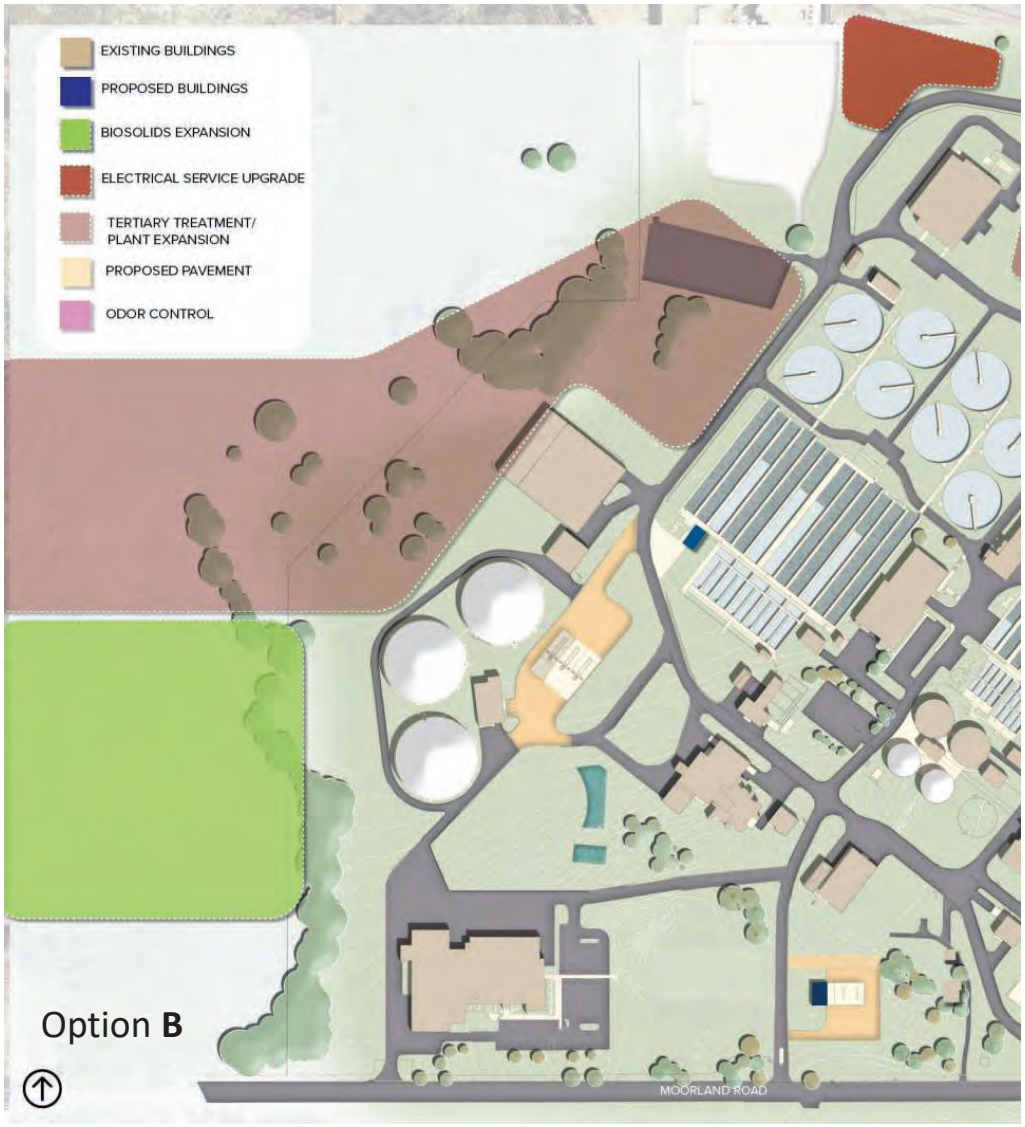

Option **B**

Heat and Power Improvements

Security Improvements - Administration

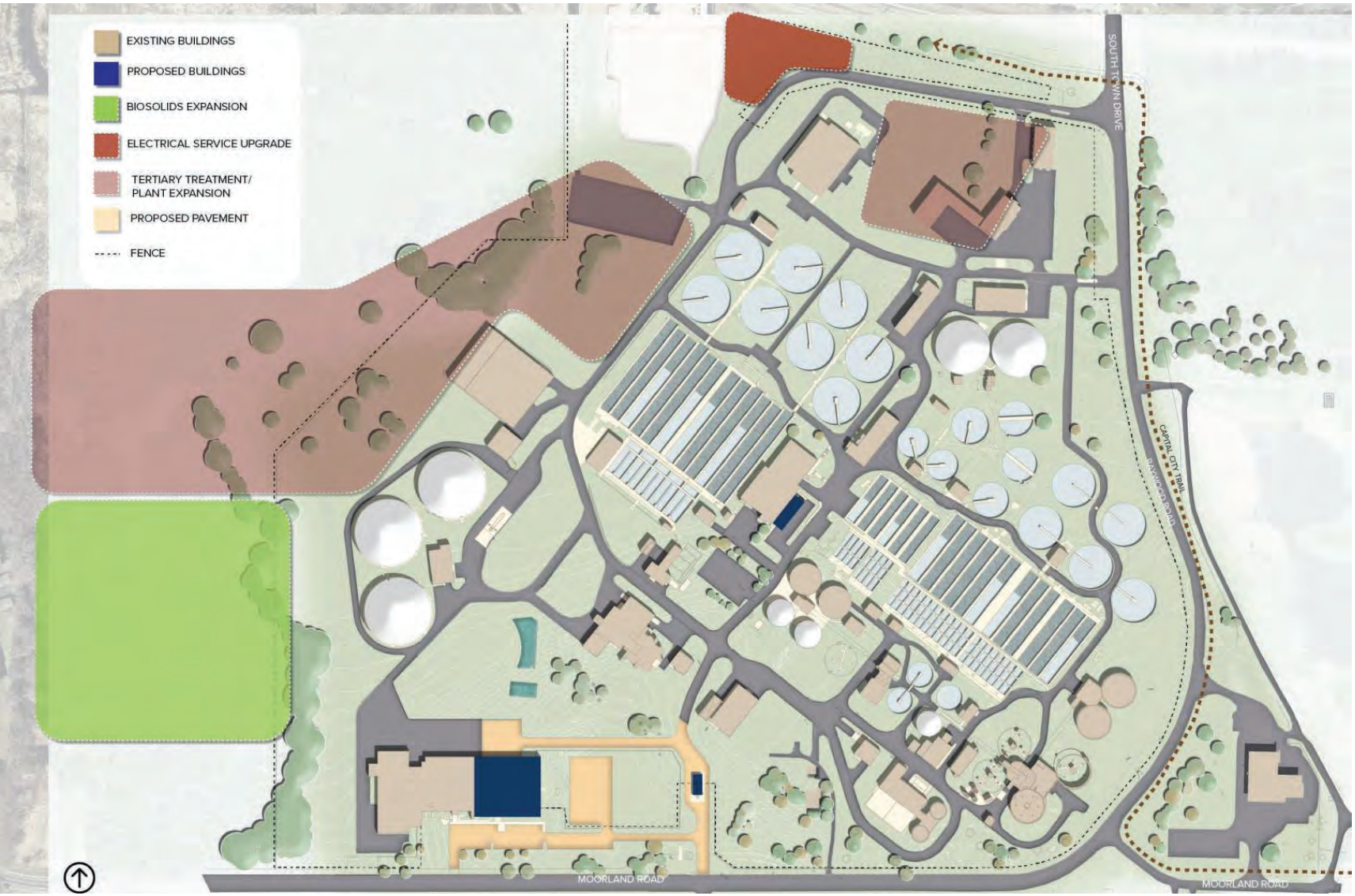

Security Improvements – Administration & Circulation

Workplace Improvements | Receiving Warehouse & Storage

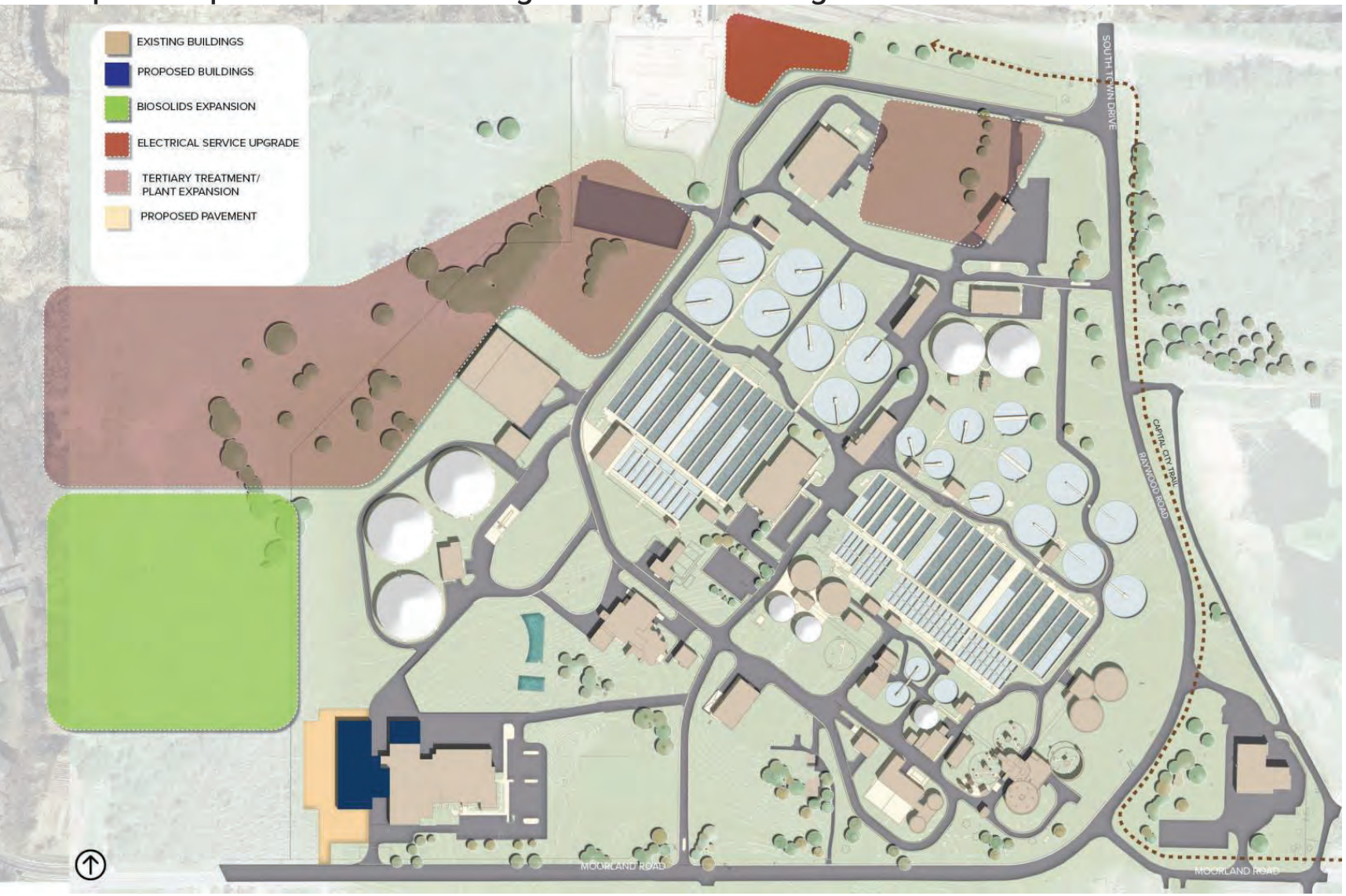

Plant-wide Stormwater Facility

Solids Digestion Expansion

Discussion and Wrap-Up

Full Build | Land Use

Full Build | Example

Thank you!

TKDA

APPENDIX F

TECHNICAL MEMORANDUM 6 - ENVISION™ PRE-ASSESSMENT

Madison Metropolitan Sewerage District

Heat and Power Improvements Facilities Plan

TECHNICAL MEMORANDUM 6

Envision™ Pre-Assessment

FINAL / November 2025

carollo

Madison Metropolitan Sewerage District

Heat and Power Improvements Facilities Plan

TECHNICAL MEMORANDUM 6

Envision™ Pre-Assessment

FINAL / November 2025

Digitally signed by Lindsey I. Busch
Date: 2025.12.01 14:30:06-06'00'

Contents

TM 6 ENVISION™ PRE-ASSESSMENT

6.1 Introduction 6-1
6.2 Envision™ Assessment 6-1
6.2.1 Quality of Life 6-1
6.2.2 Leadership 6-2
6.2.3 Resource Allocation 6-3
6.2.4 Natural World 6-4
6.2.5 Climate and Resilience 6-5
6.3 Conclusion 6-5

Appendices

APPENDIX 6A PRELIMINARY ENVISION™ V3 PRE-ASSESSMENT CHECKLIST

Tables

Table 6.1 Quality of Life Assessment Summary 6-1
Table 6.2 Leadership Assessment Summary 6-2
Table 6.3 Resource Allocation Assessment Summary 6-3
Table 6.4 Natural World Assessment Summary 6-4
Table 6.5 Climate and Resilience Assessment Summary 6-5

Abbreviations

MMSD	Madison Metropolitan Sewerage District
NSWTP	Nine Springs Wastewater Treatment Plant
TM	technical memorandum

TM 6 ENVISION™ PRE-ASSESSMENT

6.1 Introduction

The purpose of this Technical Memorandum (TM) is to provide a summary of the Envision™ assessment and corresponding guidance for applying the Envision™ Rating system to the planning of the Heat and Power Project for the Nine Springs Wastewater Treatment Plant (NSWTP). Using that initial assessment, a value-added summary can be developed to assist the Madison Metropolitan Sewerage District (MMSD) in understanding where to get the greatest sustainability benefit for their effort.

6.2 Envision™ Assessment

The following sections provide a summary of the Envision™ pre-assessment for this project for each major Envision™ category.

6.2.1 Quality of Life

The following table summarizes the Quality of Life category assessment, corresponding Envision™ points, and opportunities where additional points can be earned on the project.

Table 6.1 Quality of Life Assessment Summary

Credit	Possible Points	Eligible Points	Opportunities for Additional Points
QL1.1 - Improve Community Quality of Life	26	2	The project team could actively assess the social impacts the project will have on the community's quality of life and address any negative impacts.
QL1.2 - Enhance Public Health and Safety	20	0	The project could exceed minimum health and safety requirements as well as address health and safety requirements to the affected communities.
QL1.3 - Improve Construction Safety	14	0	Include reliable feedback mechanisms to identify risks/hazards and communicate to personnel.
QL1.4 - Minimize Noise and Vibration	12	1	Adopt target noise reduction goals and engage stakeholders on impacts.
QL1.5 - Minimize Light Pollution	12	0	Conduct a lighting assessment and strategies to reduce light pollution.
QL1.6 - Minimize Construction Impacts	8	2	Include noise and vibration and lighting mitigation in the construction management plan as well as corresponding feedback mechanisms.
QL2.1 - Improve Community Mobility Access	0	0	Credit deemed not applicable.
QL2.2 - Encourage Sustainable Transportation	0	0	Credit deemed not applicable.
QL2.3 - Improve Access and Wayfinding	0	0	Credit deemed not applicable.

Credit	Possible Points	Eligible Points	Opportunities for Additional Points
QL3.1 - Advance Equity and Social Justice	0	0	Credit deemed not applicable.
QL3.2 - Preserve Historic and Cultural Resources	18	0	Project team can demonstrate a serious effort was made to identify potential historic or cultural resources, and if none found, justify the credit as not applicable.
QL3.3 - Enhance Views and Local Character	14	11	Project can invest in restoration or enhancement of views or local character.
QL3.4 - Enhance Public Space and Amenities	0	0	Credit deemed not applicable.

Overall, the Quality of Life category is eligible for 16 of 124 points (13 percent). A minimum of 20 percent is required for an award level, however, there are many opportunities for additional features to be incorporated into the project to increase the eligible points and potential award level.

6.2.2 Leadership

The following table summarizes the Leadership category assessment, corresponding Envision™ points, and opportunities where additional points can be earned on the project.

Table 6.2 Leadership Assessment Summary

Credit	Possible Points	Eligible Points	Opportunities for Additional Points
LD1.1 - Provide Effective Leadership and Commitment	18	18	Maximum points applied.
LD1.2 - Foster Collaboration and Teamwork	18	5	The team can meet regularly to set and achieve sustainability goals.
LD1.3 - Provide for Stakeholder Involvement	18	0	The team can undertake a stakeholder mapping exercise to determine and engage key stakeholders and incorporate feedback.
LD1.4 - Pursue Byproduct Synergies	18	18	Maximum points applied.
LD2.1 - Establish a Sustainability Management Plan	18	0	Roles/responsibilities for addressing sustainability can be assigned to key members of the team including developing a sustainability management plan that is periodically revisited.
LD2.2 - Plan for Sustainable Communities	16	9	The project can be included as part of a comprehensive sustainable development plan.
LD2.3 - Plan for Long-Term Monitoring and Maintenance	12	12	Maximum points applied.
LD2.4 - Plan for End-of-Life	14	0	An end-of-life plan can be developed to extend the project life, assess impacts, engage stakeholders, and look at possible repurposing.
LD3.1 - Stimulate Economic Prosperity and Development	20	0	Minimal opportunities to create significant new jobs and stimulate further economic development.

Credit	Possible Points	Eligible Points	Opportunities for Additional Points
LD3.2 - Develop Local Skills and Capabilities	16	0	The team can target training programs to address knowledge gaps in local workforce related to the project.
LD3.3 - Conduct a Life-Cycle Economic Evaluation	14	14	Maximum points applied.

Overall, the Leadership category is eligible for 76 of 182 points (42 percent). This category has a relatively high percentage of points compared to others and there are many opportunities for additional features to be incorporated into the project to increase the eligible points and potential award level even further.

6.2.3 Resource Allocation

The following table summarizes the Resource Allocation category assessment, corresponding Envision™ points, and opportunities where additional points can be earned on the project.

Table 6.3 Resource Allocation Assessment Summary

Credit	Possible Points	Eligible Points	Opportunities for Additional Points
RA1.1 - Support Sustainable Procurement Practices	0	12	MMSD could develop a sustainable procurement policy/program to enforce on projects.
RA1.2 - Use Recycled Materials	0	16	A percentage of recycled materials could be required to be used on the project.
RA1.3 - Reduce Operational Waste	4	14	More operational waste could be reused rather than diverted for disposal (e.g. tail gas reused).
RA1.4 - Reduce Construction Waste	4	16	MMSD could develop a comprehensive waste management plan focused on decreasing more project waste and diverting from landfills during construction.
RA1.5 - Balance Earthwork On Site	4	8	Maintain all excavated material on site and minimize fill brought to the site.
RA2.1 - Reduce Operational Energy Consumption	6	26	Reduce operational energy consumption through more efficient equipment and or renewable energy sources.
RA2.2 - Reduce Construction Energy Consumption	0	12	Conduct reviews to reduce energy consumption during construction and implement conservation strategies.
RA2.3 - Use Renewable Energy	24	24	Maximum points applied.
RA2.4 - Commission and Monitor Energy Systems	3	14	Monitor at least 90 percent of the energy use/consumption of the project equipment and engage a third-party commissioning agent.
RA3.1 - Preserve Water Resources	0	0	Credit deemed not applicable.
RA3.2 - Reduce Operational Water Consumption	0	0	Credit deemed not applicable.
RA3.3 - Reduce Construction Water Consumption	0	8	Conduct planning reviews to reduce water consumption during construction and implement conservation strategies.
RA3.4 - Monitor Water Systems	0	0	Credit deemed not applicable.

Overall, the Resource Allocation category is eligible for 45 of 150 points (30 percent). This category has several opportunities for additional features to be incorporated into the project to increase the eligible points and potential award level even further.

6.2.4 Natural World

The following table summarizes the Natural World category assessment, corresponding Envision™ points, and opportunities where additional points can be earned on the project.

Table 6.4 Natural World Assessment Summary

Credit	Possible Points	Eligible Points	Opportunities for Additional Points
NW1.1 - Preserve Sites of High Ecological Value	0	0	Credit deemed not applicable.
NW1.2 - Provide Wetland and Surface Water Buffers	0	0	Credit deemed not applicable.
NW1.3 - Preserve Prime Farmland	12	16	The soils on the project site could be assessed for farmland importance.
NW1.4 - Preserve Undeveloped Land	18	24	The project could return developed areas to a condition that supports natural open space/habitat/hydrology.
NW2.1 - Reclaim Brownfields	0	22	Provide documentation that efforts were made to consider locating the project on a brownfield site.
NW2.2 - Manage Stormwater	0	24	The project could incorporate stormwater treatment on site.
NW2.3 - Reduce Pesticide and Fertilizer Impacts	0	0	Credit deemed not applicable.
NW2.4 - Protect Surface and Groundwater Quality	0	0	Credit deemed not applicable.
NW3.1 - Enhance Functional Habitats	0	18	Because the project is on an existing site, there are minimal opportunities to increase points in this category.
NW3.2 - Enhance Wetland and Surface Water Functions	0	20	The project could provide enhanced stormwater mitigation to restore water quality/habitat.
NW3.3 - Maintain Floodplain Functions	0	0	Credit deemed not applicable.
NW3.4 - Control Invasive Species	1	12	A site assessment could be conducted to determine if invasive species are present on site.
NW3.5 - Protect Soil Health	4	8	A soil protection plan could be implemented to comply with best management practices and/or prepared under a soil scientist.

Overall, the Natural World category is eligible for 39 of 144 points (27 percent). This category has several opportunities for additional features to be incorporated into the project to increase the eligible points and potential award level even further.

6.2.5 Climate and Resilience

The following table summarizes the Climate and Resilience category assessment, corresponding Envision™ points, and opportunities where additional points can be earned on the project.

Table 6.5 Climate and Resilience Assessment Summary

Credit	Possible Points	Eligible Points	Opportunities for Additional Points
CR1.1 - Reduce Net Embodied Carbon	0	20	Demonstrate reduction in net embodied carbon of materials used in construction and operation.
CR1.2 - Reduce Greenhouse Gas Emissions	0	26	Source energy from renewable sources to reduce the greenhouse gas emissions for the project.
CR1.3 - Reduce Air Pollutant Emissions	4	18	Assess the materiality of volatile organic compounds to the health of construction workers and operators.
CR2.1 - Avoid Unsuitable Development	0	16	Identify potential siting hazards and vulnerabilities to demonstrate actively avoiding site hazards.
CR2.2 - Assess Climate Change Vulnerability	0	20	Evaluate climate change threats to the project and surroundings as well as vulnerability of the project to climate change.
CR2.3 - Evaluate Risk and Resilience	26	26	Maximum points applied.
CR2.4 - Establish Resilience Goals and Strategies	20	20	Maximum points applied.
CR2.5 - Maximize Resilience	26	26	Maximum points applied.
CR2.6 - Improve Infrastructure Integration	18	18	Maximum points applied.

Overall, the Climate and Resilience category is eligible for 94 of 190 points (49 percent). While this is the relatively highest scoring category, it still has several opportunities for additional features to be incorporated into the project to increase the eligible points and potential award level even further.

6.3 Conclusion

A conservative approach was taken to assess MMSD's Envision™ implementation approach of the project. There are numerous opportunities to increase the number of possible points for nearly all the Envision™ categories, warranting further exploration as the planning/design is refined. Categories with the greatest opportunity for additional points include Quality of Life, Resource Allocation, and Natural World.

The total number of eligible points for the project was determined to be 270 out of 790 applicable points (34 percent), making the project eligible for a possible Silver award level. If MMSD pursues more aggressive sustainability and resilience measures such as incorporating recycled material requirements, sustainable procurement practices, etc., the possible award level could increase.

APPENDIX 6A

PRELIMINARY ENVISION™ V3 PRE-ASSESSMENT CHECKLIST

Summary Results

			Credit Assessment Status	Evaluation Questions Assessed		Assessment Status						Assessed Maximum Points Available	Total Maximum Points
				Yes	No	Improved	Enhanced	Superior	Conserving	Restorative	Points		
Quality of Life	Wellbeing	QL1.1 Improve Community Quality of Life	Assessed	2	5	2	0	0	0	0	2	26	26
		QL1.2 Enhance Public Health & Safety	Assessed	3	3	0	0	0	0	0	0	20	20
		QL1.3 Improve Construction Safety	Assessed	4	1	0	0	0	0	--	0	14	14
		QL1.4 Minimize Noise & Vibration	Assessed	3	2	1	0	0	0	0	1	12	12
		QL1.5 Minimize Light Pollution	Assessed	0	6	0	0	0	0	0	0	12	12
		QL1.6 Minimize Construction Impacts	Assessed	3	3	0	2	0	0	--	2	8	8
	Mobility	QL2.1 Improve Community Mobility Access	Not Applicable	0	0	0	0	0	0	0	0	0	14
		QL2.2 Encourage Sustainable Transportation	Not Applicable	0	0	--	0	0	0	0	0	0	16
		QL2.3 Improve Access & Wayfinding	Not Applicable	0	0	0	0	0	0	--	0	0	14
	Community	QL3.1 Advance Equity & Social Justice	Not Applicable	0	0	0	0	0	0	0	0	0	18
		QL3.2 Preserve Historic & Cultural Resources	Assessed	1	5	--	0	0	0	0	0	18	18
		QL3.3 Enhance Views & Local Character	Assessed	5	1	0	0	0	11	0	11	14	14
		QL3.4 Enhance Public Space & Amenities	Not Applicable	0	0	0	0	0	0	0	0	0	14

			Credit Assessment Status	Evaluation Questions Assessed		Assessment Status						Assessed Maximum Points Available	Total Maximum Points
				Yes	No	Improved	Enhanced	Superior	Conserving	Restorative	Points		
Leadership	Collaboration	LD1.1 Provide Effective Leadership & Commitment	Assessed	4	0	0	0	0	18	--	18	18	18
		LD1.2 Foster Collaboration & Teamwork	Assessed	3	1	0	5	0	0	--	5	18	18
		LD1.3 Provide for Stakeholder Involvement	Assessed	0	6	0	0	0	0	0	0	18	18
		LD1.4 Pursue Byproduct Synergies	Assessed	5	0	0	0	0	0	18	18	18	18
	Planning	LD2.1 Establish a Sustainability Management Plan	Assessed	0	5	0	0	0	0	--	0	18	18
		LD2.2 Plan for Sustainable Communities	Assessed	4	1	0	0	9	0	0	9	16	16
		LD2.3 Plan for Long-Term Monitoring & Maintenance	Assessed	5	0	0	0	0	12	--	12	12	12
		LD2.4 Plan for End-of-Life	Assessed	0	5	0	0	0	0	--	0	14	14
	Economy	LD3.1 Stimulate Economic Prosperity & Development	Assessed	3	2	0	0	0	0	--	0	20	20
		LD3.2 Develop Local Skills & Capabilities	Assessed	0	4	0	0	0	0	0	0	16	16
		LD3.3 Conduct a Life-Cycle Economic Evaluation	Assessed	5	0	0	0	0	0	14	14	14	14

			Credit Assessment Status	Evaluation Questions Assessed		Assessment Status						Assessed Maximum Points Available	Total Maximum Points
				Yes	No	Improved	Enhanced	Superior	Conserving	Restorative	Points		
Resource Allocation	Materials	RA1.1 Support Sustainable Procurement Practices	Assessed	0	2	0	0	0	0	--	0	12	12
		RA1.2 Use Recycled Materials	Assessed	0	1	0	0	0	0	--	0	16	16
		RA1.3 Reduce Operational Waste	Assessed	2	0	4	0	0	0	--	4	14	14
		RA1.4 Reduce Construction Waste	Assessed	2	0	4	0	0	0	--	4	16	16
		RA1.5 Balance Earthwork On Site	Assessed	1	0	0	4	0	0	--	4	8	8
	Energy	RA2.1 Reduce Operational Energy Consumption	Assessed	2	0	6	0	0	0	--	6	26	26
		RA2.2 Reduce Construction Energy Consumption	Assessed	0	2	0	0	0	0	--	0	12	12
		RA2.3 Use Renewable Energy	Assessed	1	0	0	0	0	0	24	24	24	24
		RA2.4 Commission & Monitor Energy Systems	Assessed	2	1	3	0	0	0	--	3	14	14
	Water	RA3.1 Preserve Water Resources	Not Applicable	0	0	0	0	0	0	0	0	0	12
		RA3.2 Reduce Operational Water Consumption	Not Applicable	0	0	0	0	0	0	0	0	0	22
		RA3.3 Reduce Construction Water Consumption	Assessed	0	2	0	0	0	0	--	0	8	8
		RA3.4 Monitor Water Systems	Not Applicable	0	0	0	0	0	0	--	0	0	12

			Credit Assessment Status	Evaluation Questions Assessed		Assessment Status						Assessed Maximum Points Available	Total Maximum Points
				Yes	No	Improved	Enhanced	Superior	Conserving	Restorative	Points		
Natural World	Siting	NW1.1 Preserve Sites of High Ecological Value	Not Applicable	0	0	0	0	0	0	0	0	0	22
		NW1.2 Provide Wetland & Surface Water Buffers	Not Applicable	0	0	0	0	0	0	0	0	0	20
		NW1.3 Preserve Prime Farmland	Assessed	3	2	--	0	0	12	0	12	16	16
		NW1.4 Preserve Undeveloped Land	Assessed	1	1	0	0	0	18	0	18	24	24
	Conservation	NW2.1 Reclaim Brownfields	Assessed	0	4	0	0	0	0	0	0	22	22
		NW2.2 Manage Stormwater	Assessed	2	2	0	0	0	0	0	0	24	24
		NW2.3 Reduce Pesticide & Fertilizer Impacts	Not Applicable	0	0	0	0	0	0	0	0	0	12
		NW2.4 Protect Surface & Groundwater Quality	Not Applicable	0	0	0	0	0	0	0	0	0	20
	Ecology	NW3.1 Enhance Functional Habitats	Assessed	0	6	0	0	0	0	0	0	18	18
		NW3.2 Enhance Wetland & Surface Water Functions	Assessed	0	7	0	0	0	0	0	0	20	20
		NW3.3 Maintain Floodplain Functions	Not Applicable	0	0	0	0	0	0	0	0	0	14
		NW3.4 Control Invasive Species	Assessed	1	5	1	0	0	0	0	1	12	12
		NW3.5 Protect Soil Health	Assessed	4	0	--	0	0	0	8	8	8	8

			Credit Assessment Status	Evaluation Questions Assessed		Assessment Status						Assessed Maximum Points Available	Total Maximum Points
				Yes	No	Improved	Enhanced	Superior	Conserving	Restorative	Points		
Climate and Resilience	Emissions	CR1.1 Reduce Net Embodied Carbon	Assessed	2	1	0	0	0	0	--	0	20	20
		CR1.2 Reduce Greenhouse Gas Emissions	Assessed	1	1	0	0	0	0	0	0	26	26
		CR1.3 Reduce Air Pollutant Emissions	Assessed	4	1	0	4	0	0	0	4	18	18
	Resilience	CR2.1 Avoid Unsuitable Development	Assessed	0	6	0	0	0	0	0	0	16	16
		CR2.2 Assess Climate Change Vulnerability	Assessed	0	5	0	0	0	0	--	0	20	20
		CR2.3 Evaluate Risk and Resilience	Assessed	6	0	0	0	0	26	--	26	26	26
		CR2.4 Establish Resilience Goals and Strategies	Assessed	4	0	--	0	0	20	--	20	20	20
		CR2.5 Maximize Resilience	Assessed	5	0	0	0	0	26	--	26	26	26
		CR2.6 Improve Infrastructure Integration	Assessed	5	0	0	0	0	0	18	18	18	18

	Credit Assessment Status	Evaluation Questions Assessed		Assessment Status						Assessed Maximum Points Available	Total Maximum Points
		Yes	No	Improved	Enhanced	Superior	Conserving	Restorative	Points		
Total Points	**All Credits Assessed**	**98**	**99**	**21**	**15**	**9**	**143**	**82**	**270**	**790**	**1000**

Possible Award Level:	**Silver**

APPENDIX G

BUSINESS CASE EVALUATION

PROJECT MEMORANDUM

MADISON METROPOLITAN SEWERAGE DISTRICT

Heat and Power Improvements Facilities Plan

Project No.: 203259

Date: November 20, 2025

Prepared By: Alankrita Sahay

Reviewed By: Becky Luna

Subject: Heat and Power Improvements Business Case Evaluation

1.0 HEAT AND POWER IMPROVEMENTS FACILITIES PLAN

1.1 Project Purpose

The purpose of Heat and Power Improvements Facilities Plan was to identify and evaluate strategies to address aging heat and power infrastructure concerns at the Nine Springs Wastewater Treatment Plant (NSWTP).

1.2 Project History and Status

The 2020 Energy Management Master Plan (EMMP) included a high-level evaluation of biogas utilization and identified two key alternatives: the Enhanced Baseline Alternative which upgraded the existing system with higher efficiency cogeneration engines and the Reduced Infrastructure Complexity Alternative, which converted the infrastructure to a biogas upgrading system to simplify operations. This Heat and Power Improvements Facilities Plan further evaluated these two biogas utilization options and provided recommendations to enhance thermal system operations at Madison Metropolitan Sewerage District (MMSD).

An existing infrastructure evaluation of the biogas and thermal system was performed to determine the status and operational challenges of the existing infrastructure. The biogas and hot water systems were found to have several age-related and performance issues. The boilers, engines, and engine blower are well past their expected service life, while the radiators and silencers showed signs of corrosion and required replacement. The hot water system also has several operational issues related to pressure variability and the ability to move heat to the appropriate areas of the plant. In general, an overall replacement of the biogas utilization system and significant upgrades to the hot water system were recommended based on the existing infrastructure evaluation.

1.3 Pathways/Alternatives

The following pathways were evaluated to beneficially use biogas and for the plant wide heating system at NSWTP.

1.3.1 Null Pathway

This approach for biogas system involves maintaining the existing engines, engine blower, and boilers primarily through rebuilds, with capital investments limited to in-kind replacements such as the blower, chiller, and controls. However, the system remains inefficient and highly maintenance-intensive.

For the plant wide hot water system, the Null Pathway anticipates no major changes to the existing hot water infrastructure other than the replacement of major thermal equipment that is at the end of its useful life (West Boilers). As the equipment continues to age, operational risks increase, making this pathway unsuitable for long-term planning.

1.3.2 Pathway 1 Cogeneration

1.3.2.1 Biogas System

Pathway 1 proposed replacing the current engines with two 1.5 megawatt reciprocating cogeneration engines housed in a new building. A modern gas conditioning system would be installed to remove hydrogen sulfide, siloxanes, and moisture, while the existing engine blower would be decommissioned to simplify biogas routing. This pathway would generate approximately 60 percent of the facility's electrical demand—double the current output—and provide 6.8 to 7.3 million British thermal units per hour of average recoverable heat, significantly reducing natural gas consumption during winter.

1.3.2.2 Hot Water System

Pathway 1 assumes all digester gas would be utilized for electricity generation and heat recovery, and thus not used directly to support plant heating. Two heating alternatives were assessed and both alternatives require a new Cogeneration/Boiler Building, upgraded piping, new boilers and pumps, and modifications to ventilation systems.

Centralized Heating Alternative

Under the centralized heating alternative, hot water supplies all process and heating, ventilation, and air conditioning (HVAC) heating needs across the plant. Heat supply would be consolidated into a common loop, eliminating the separate east and west/central loops. Supplemental boilers provide reliability when cogeneration is offline.

Decentralized Heating Alternative

Under the decentralized heating alternative, hot water distribution was limited to central buildings and digestion facilities, while other buildings were heated with natural gas equipment. This reduced infrastructure needs but increased purchased fuel demand.

1.3.3 Pathway 2 Renewable Natural Gas

1.3.3.1 Biogas System

Pathway 2 involves replacing the engines with a membrane biogas upgrading system and connecting to a local natural gas pipeline. All biogas would be upgraded to renewable natural gas (RNG) and sold for use as vehicle fuel, taking advantage of D3 renewable identification numbers and voluntary market credits. On-site energy generation would be eliminated, and the facility would rely entirely on purchased electricity and primarily on natural gas for heating.

1.3.3.2 Hot Water System

Pathway 2 replaced existing cogeneration engines with a biogas upgrading system to produce RNG for pipeline injections. All digester gas would be conditioned, compressed, and injected into the natural gas utility grid. This would result in higher dependence on purchased electricity and natural gas but would generate new revenue streams from RNG sales and environmental credits. Two heating alternatives were considered:

Centralized Heating Alternative

Under the decentralized heating alternative for Pathway 2, all heating needs would be served by new boilers in a new Boiler Building.

Decentralized Heating Alternative

Under the decentralized heating alternative for Pathway 2, hot water would be supplied only to select central buildings and digesters, while other buildings would use natural gas-fired systems. This reduces infrastructure requirements but increases fuel consumption.

1.4 Key Considerations of each alternative

Decision-making criteria were established during the kickoff workshop to aid MMSD's decision-making process. The decision-making criteria include capital costs, life cycle costs, operational complexity/difficulty, operational response/risk/uptime, future site flexibility, market risk, energy recovery, and outside dependence. Table 1 presents a high-level summary of how each pathway meets the criteria for the biogas system and Table 2 presents the same for each pathway in the heating system. The two tables are presented separately as they were analyzed independent of each other. The overall scoring of each heating alternative in combination with the respective biogas alternatives is presented in the Facilities Plan.

Table 1 Review of Pathways 1 (Cogen) and 2 (RNG) for Biogas System Based on Decision Criteria

Category	Criteria	Pathway 1: Cogen	Pathway 2: RNG
Financial	Capital Costs	Similar capital cost to Pathway 2.	Similar capital cost to Pathway 1.
	Life Cycle Costs	Positive revenue is realized after approximately 13 years of operation. Overall, 20-year revenue is lower than Pathway 2 but has a NPV of approximately $14 million. Based on the sensitivity evaluations, the payback for Pathway 1 ranges from 11 to 14 years.	Higher revenue projection over 20 years, with estimated payback of 6 years and 20-year NPV of approximately $59.5 million. Based on the sensitivity evaluations, the payback for Pathway 2 ranges from 6 to 15 years.
O&M	Operational Complexity/Difficulty	MMSD is familiar with gas conditioning equipment and cogeneration engines. However, Pathway 1 has more operational complexity as compared to a biogas upgrading system.	MMSD is unfamiliar with overall system, however individual components are similar to existing gas conditioning system and membranes do not require significant operator attention.
	Operational Response/Risk/Uptime	Reliable technologies that are familiar to MMSD. Downtime required for media replacement. Proper maintenance and on-site spare parts storage required to maintain up-time. Requires operator attention when errors occur.	Treatment is proven and is anticipated to meet natural gas utility requirements consistently. Downtime required for media replacement. Complex system comprised of multiple sub-systems with extensive instruments and controls. With proper maintenance and on-site spare parts storage, uptime of 95 percent is possible. Requires operator attention when errors occur.
Implementation	Future Site Flexibility	Proposed locations do not impact MMSD's future expansion of process-related or other infrastructure.	Proposed locations do not impact MMSD's future expansion of process related or other infrastructure.
Other	Market Risk	Minimal market risk as baseline Pathway 1 revenue is based on offset of electricity costs.	Financial feasibility is based on EPA's RFS program, which has been resilient to changes in political administrations to this point and has broad support. However, this program is not guaranteed, and RIN values have experienced significant fluctuations historically. Voluntary market can provide additional security with long-term contracts.
	Energy Recovery	Capable of 42 percent electrical and 40 to 45 percent thermal efficiency; combined efficiency of approximately 85 percent recovery of the biogas energy.	Capable of 99.5 percent recovery of the biogas energy.
	Outside Dependence	When cogens are on-line, provides 60 percent of electricity utilized on-site and 50 percent of heat required for process and building needs.	Requires outside partnerships for pipeline injection and external energy for process heat, supplied by natural gas. Cannot produce electricity to be used on site.

Notes:
EPA - United States Environmental Protection Agency; O&M - operations and maintenance; NPV - net present value; RFS - renewable fuel standard; RIN - renewable identification number.

Table 2 Review of Pathways 1 (Cogen) and 2 (RNG) for Heating System Based on Decision Criteria

Category	Criteria	Pathway 1 (Cogen) Centralized Alternative	Pathway 1 (Cogen) Decentralized Alternative	Pathway 2 (RNG) Centralized Heating Alternative	Pathway 2 (RNG) Decentralized Alternative
Financial	Capital Costs	This alternative is the most expensive due primarily to the need for a new Boiler/Cogeneration building and piping costs.	Capital costs are lower than Pathway 1 Centralized Alternative due to lower site piping costs.	Similar cost to Pathway 1 Centralized Alternative.	This is the least cost alternative due primarily to the smaller boilers and ability to reuse existing infrastructure.
	Life Cycle Costs	This alternative has the benefit of capturing heat from the cogeneration engines, lowering operation costs. This is lower than the Pathway 2 lifecycle costs.	Similar to Pathway 1 Centralized Alternative. The cost is lower due to Decentralized Heating Alternative having a lower capital cost.	This is the highest lifecycle cost. This alternative does not capture any heat and has a higher operation cost.	Similar to Pathway 2 Centralized Heating Alternative. The cost is lower due to Decentralized Heating Alternative having a lower capital cost.
O&M	Operational Complexity/ Difficulty	Future operation will include a central control system for all hot water system components. Equipment serving the hot water system is familiar to MMSD. This alternative includes a larger hot water system, which requires monitoring of water chemistry and pumps for a large system.	Future operation will include a central control system for all hot water system components. Equipment serving the hot water system is familiar to MMSD.	Similar to Pathway 1 Centralized Alternative.	Similar to Pathway 1 Decentralized Alternative.
	Operational Response/ Risk/Uptime	Centralized Alternative includes more hot water generating equipment and the hot water system is more redundant compared with the Decentralized Alternative.	This alternative includes natural gas fired equipment serving buildings, which is not reliant on the hot water system.	Similar to Pathway 1 Centralized Alternative, but does not include the cogeneration engines as a heat source. Therefore, this alternative has less redundancy of hot water generating.	Similar to Pathway 2 Centralized Heating Alternative and Pathway 1 Decentralized Alternative. This alternative does not include cogeneration engines so there is less redundancy.

Category	Criteria	Pathway 1 (Cogen) Centralized Alternative	Pathway 1 (Cogen) Decentralized Alternative	Pathway 2 (RNG) Centralized Heating Alternative	Pathway 2 (RNG) Decentralized Alternative
Implementation	Future Site Flexibility	Future expansion of process-related or other infrastructure would require upsizing hot water piping and hot water pumps.	For infrastructure served by natural gas, future expansion would be easy to accommodate. Other infrastructure served by hot water would be similar to the Centralized Alternative.	Similar to Pathway 1 Centralized Alternative.	Similar to Pathway 1 Decentralized Alternative.
Other	Market Risk	Not Applicable	Not Applicable	Not Applicable	Not Applicable
	Energy Recovery	This option benefits most from the energy provided to the hot water system from the cogeneration engines.	Similar to Pathway 1 Centralized Alternative but the hot water demand is lower so there is more excess heat that is rejected.	This option does not have the benefit of energy capture from the cogeneration engine.	Similar to Pathway 2 Centralized Heating Alternative.
	Outside Dependence	If there is interruption of natural gas service to the Nine Springs Facility, the cogeneration engines will help to supplement plant hot water needs.	Similar to Pathway 1 Centralized Alternative but the gas-fired equipment will be down if the natural gas service is interrupted.	Fully dependent on outside energy sources.	Fully dependent on outside energy sources.

1.5 Economic Analysis

Table 3 shows the combined estimated project capital costs for each alternative presented in the biogas and plant-wide heating system evaluations. Table 4 shows the simple payback for each combined alternative. Capital costs are escalated to 2028 dollars for NPV calculations, as described in TMs 4 and 5. The highest revenue potential and fastest payback is achieved with the Pathway 2 decentralized alternative.

Table 3 Combined Estimated Project Capital Cost for Each Alternative

Biogas and Hot Water Pathways	Null Pathway	Pathway 1 (Cogen) Centralized Alternative	Pathway 1 (Cogen) Decentralized Alternative	Pathway 2 (RNG) Centralized Heating Alternative	Pathway 2 (RNG) Decentralized Alternative
Biogas Capital Cost Estimate (2025 Dollars)(1)	$552,000	$26,614,000		$25,572,000	
Hot Water Capital Cost Estimate (2025 Dollars)	$3,259,000	$19,748,000	$15,223,000	$19,748,000	$11,711,000
Biogas + Hot Water Capital Cost Estimate (2025 Dollars)	**$3,811,000**	**$46,362,000**	**$41,837,000**	**$45,320,000**	**$37,283,000**

Notes:
(1) Capital costs are shown in 2025 dollars in this table.

Table 4 Combined Estimated Payback(1)

Biogas and Hot Water Pathways	Null Pathway	Pathway 1 (Cogen) Centralized Alternative	Pathway 1 (Cogen) Decentralized Alternative	Pathway 2 (RNG) Centralized Heating Alternative	Pathway 2 (RNG) Decentralized Alternative
Biogas O&M Annual(2)	($416,000)	($2,218,000)		($4,495,000)	
Hot Water O&M Annual(3)	$58,000	$82,000	$196,000	$82,000	$347,000
Biogas + Hot Water Annual O&M	**($358,000)**	**($2,136,000)**	**($2,022,000)**	**($4,413,000)**	**(4,148,000)**
Biogas + Hot Water Capital Cost Estimate (2028 Dollars)(4)	**$4,226,000**	**$51,402,000**	**$46,385,000**	**$50,247,000**	**$41,336,000**
Simple Payback	**12 years**	**24 years**	**23 years**	**11 years**	**10 years**

Notes:
(1) Combined NPV costs for all alternatives.
(2) Values shown in parentheses are revenues.
(3) Natural gas costs for hot water and digester heating are not included to avoid double counting as they are included in biogas O&M costs. Hot water O&M costs include natural gas cost for gas-fired equipment, electricity for HVAC systems and HVAC equipment O&M.
(4) Capital costs are shown in 2028 dollars in this table for NPV calculations.

1.6 Project Recommendation

Based on the evaluation completed, each of the pathways were found to be feasible and would meet MMSD's goals. Pathway 1 (centralized and decentralized) scored better in both market risk and outside dependence, while Pathway 2 (centralized and decentralized) scored higher in life cycle costs. The

Pathway 2 Decentralized alternative is recommended based on having the lowest capital cost, highest revenue potential, and highest combined scoring. As noted in the table above, the combined project capital cost escalated to 2028 dollars for this alternative is $41,336,000 with the shortest payback period of 10 years.

The RNG/decentralized heating combination demonstrates the most favorable economic performance, with the highest score based on the weighted decision criteria.

1.7 Project Schedule

Table 5 presents the estimated timeline for this project (assuming a Design-Bid-Build delivery approach). Including preliminary design, final design, bidding and award, and construction, this project is estimated to take five years to complete.

Table 5 Estimated Project Schedule

Table Header	Start Date	Completion date	Duration
Preliminary Design	2028	2028	6 months
Final Design	2028	2029	15 months
Bidding and Award	2029	2029	3 months
Construction	2030	2032	36 months
Total			60 months (5 years)

1.7.1 Financial Summary

An estimated Financial Summary for the Pathway 2 (RNG) Decentralized alternative is presented in Table 6. This table provides a simple breakdown of the estimated project costs and categorizes the combined expenditure/fee by all the responsible parties for a clear understanding of the project's cost allocation. These costs are provided in 2025 dollars.

Table 6 Estimated Financial Summary

	Total Project Cost
District Staff and Engineering	$6,757,000
Contractor	$27,026,000
RNG Interconnect Facility	$3,500,000
Total	$37,283,000

1.7.2 Fiscal Year Allocation

A Fiscal Year Allocation or the distribution of the total project costs is shown in Table 7. This estimated allocated budget will be used to fund design, construction, and other project related activities within the designated period of 2028 through 2032.

Table 7 Estimated Fiscal Year Allocation

	2028	2029	2030	2031	2032
District Staff and Engineering	$676,000	$1,689,000	$1,689,000	$1,351,500	$1,351,500
Contractor	$0	$0	$9,008,700	$9,008,700	$9,008,600
MGE Interconnect Facility				$700,000	$2,800,000
Total	$676,000	$1,689,000	$10,697,700	$11,060,200	$13,160,100